LONDON MIDLAND & SCOTTISH RAILW

DRAWINGS

OF

STANDARD RAILWAY EQUIPMENT

PERMANENT WAY

1928

STANDARD RAILWAY EQUIPMENT — PERMANENT WAY.

APPENDIX A. LIST OF DRAWINGS.

95R, B. S. RAIL.

Nº	TITLE
1	Sleeper Spacing and Details of Fastenings
2	B S Fishplates and Details of Rail Drilling
3	Insulated Fishplates and Details of Rail Drilling.
4	Common Chair S.1. 46 lb.
5	Joint Chair S.1. J. 53 lb.
6	L. 1. Chair. 48 lb.
7	Check Rail Chair for Curves 7 to 10 chains radius.
8	"A" Undercut Switches.
9	"B" Undercut Switches.
10	"C" Undercut Switches.
11	"D" Undercut Switches.
12	"E" Undercut Switches.
13	"A" Straightcut Switches.
14	"B" Straightcut Switches.
15	"C" Straightcut Switches.
16	"D" Straightcut Switches.
17	"E" Straightcut Switches.
18	Chairs for Switches.
19	Details of Fittings for Switches.
20	Switch Stretcher Bars and Soleplate. First Bar for Undercut Switches.
21	Switch Stretcher Bars and Soleplate. First Bar for Straightcut Switches.
22	Second and Third Switch Stretcher Bars for Undercut and Straightcut Switches.
23	Switch Stretcher Bars and Soleplate for 1 in 8 Double Slip Roads. First Bars for Undercut and Straightcut Switches.
24	Insulated Switch Stretcher Bar and Soleplate. First Bar for Undercut Switches.
25	Insulated Switch Stretcher Bar and Soleplate. First Bar for Straightcut Switches.
26	Insulated Second and Third Switch Stretcher Bars for Undercut and Straightcut Switches.
27	Insulated Switch Stretcher Bars and Soleplate for 1 in 8 Double Slip Roads First Bars for Undercut and Straightcut Switches.
28	Common Crossings 1 in 4 and 1 in 4½.
29	Common Crossings 1 in 5 and 1 in 5½
30	Common Crossings 1 in 6 and 1 in 6½.
31	Common Crossings 1 in 7 and 1 in 7½.
32	Common Crossing 1 in 8.
33	Common Crossings 1 in 9 and 1 in 10.
34	Common Crossing 1 in 12.
35	Common Crossing 1 in 16.
36 37, 38.	Chairs for Common Crossings.
39	Obtuse Angle Crossing 1 in 4.
40	Obtuse Angle Crossings 1 in 4½ and 1 in 5.
41	Obtuse Angle Crossings 1 in 5½ and 1 in 6.
42	Obtuse Angle Crossings 1 in 6½, 1 in 7 and 1 in 7½.
43	Obtuse Angle Crossing 1 in 8.
44	Chairs for Obtuse Angle Crossings.
45	1 in 8 Obtuse Angle Crossing with Single and Double Slip Roads.
46	Chairs for ditto.
47	M.1. Chair for ditto.
48	S.1. and S.2. Chair Gauges.

85R, B. S. RAIL.

Nº	TITLE
49	Sleeper Spacing and Details of Fastenings.
50	B. S. Fishplates and Details of Rail Drilling.
51	Insulated Fishplates and Details of Rail Drilling.
52	Common Chair S.2 40 lb
53	L.2. Chair.
54	Check Rail Chair for Curves 7 to 10 chains radius.
55	"A" Undercut Switches.
56	"B" Undercut Switches.
57	"C" Undercut Switches.
58	"D" Undercut Switches.
59	"E" Undercut Switches.
60	"A" Straightcut Switches.
61	"B" Straightcut Switches.
62	"C" Straightcut Switches.
63	"D" Straightcut Switches.
64	"E" Straightcut Switches.
65	Chairs for Switches.
66	Details of Fittings for Switches.
67	Switch Stretcher Bars and Soleplate. First Bar for Undercut Switches.
68	Switch Stretcher Bars and Soleplate. First Bar for Straightcut Switches.
69	Second and Third Switch Stretcher Bars for Undercut and Straightcut Switches.
70	Switch Stretcher Bars and Soleplate for 1 in 8 Double Slip Roads. First Bars for Undercut and Straightcut Switches.
71	Insulated Switch Stretcher Bar and Soleplate. First Bar for Undercut Switches.
72	Insulated Switch Stretcher Bar and Soleplate. First Bar for Straightcut Switches.
73	Insulated Second and Third Switch Stretcher Bars for Undercut and Straightcut Switches.
74	Insulated Switch Stretcher Bars and Soleplate for 1 in 8 Double Slip Roads. First Bars for Undercut and Straightcut Switches
75	Common Crossings 1 in 4 and 1 in 4½.
76	Common Crossings 1 in 5 and 1 in 5½.
77	Common Crossings 1 in 6 and 1 in 6½.
78	Common Crossings 1 in 7 and 1 in 7½.
79	Common Crossing 1 in 8.
80	Common Crossings 1 in 9 and 1 in 10.
81	Common Crossing 1 in 12.
82	Common Crossing 1 in 16.
83, 84, 85.	Chairs for Common Crossings.
86	Obtuse Angle Crossing 1 in 4.
87	Obtuse Angle Crossings 1 in 4½ and 1 in 5.
88	Obtuse Angle Crossings 1 in 5½ and 1 in 6.
89	Obtuse Angle Crossings 1 in 6½, 1 in 7 and 1 in 7½.
90	Obtuse Angle Crossing 1 in 8.
91	Chairs for Obtuse Angle Crossings.
92	1 in 8 Obtuse Angle Crossing with Single and Double Slip Roads.
93	Chairs for ditto.
94	M.2. Chair for ditto.

SUPPLEMENTARY DRAWINGS.

7A	End Check Rail Chair for Curves 7 to 10 chains radius.
27A	Stretcher Bar, Soleplate and Fittings for Switch Diamond Crossing 1 in 12.
28A	Common and Obtuse Angle Crossing 1 in 3½.
28B	Common and Obtuse Angle Crossing 1 in 3.
28C	Common and Obtuse Angle Crossing 1 in 2½.
28D	Common and Obtuse Angle Crossing 1 in 2.
28E	Common and Obtuse Angle Crossing 1 in 1½.
36A	Chairs for Common and Obtuse Angle Crossings 1 in 1½ to 1 in 3½.
38A	Common Crossing Chairs to take Parallel Wing Rails
38B	Method of Timbering Junctions and Crossover Roads.
38C and D	Method of Timbering under Crossings
43A	Switch Diamond Crossing 1 in 12.
35A	Common Crossing 1 in 11
35B	Chairs for ditto
34A	Common Crossing 1 in 14
34B	Chairs for ditto.
45A	1 in 7 Obtuse Angle Crossing with Single and Double Slip Roads.
46A	Chairs for ditto
18A	Revised "F" chair for Switches
47A	S.1N and S.1O. Chairs
45B	1 in 7½ Obtuse Angle Crossing with Single and Double Slip Roads
46B	Chairs for ditto.
7B	Guard Rail Chair for Bridges
7C	L.1 Guard Rail Chair
54A	End Check Rail Chair for Curves 7 to 10 chains radius.
86A	Common Crossing Chairs to take Parallel Wing Rails.
65A	Revised "F" chair for Switches.
75A	Common and Obtuse Angle Crossings 1 in 1½ to 1 in 3½
83A	Chairs for ditto.
92A	1 in 7 Obtuse Angle Crossing with Single and Double Slip Roads.
93A	Chairs for ditto.
94A	S2N and S2O. Chairs.
81A	Common Crossings 1 in 11 and 1 in 14
81B	Chairs for ditto
92B	1 in 7½ Obtuse Angle Crossing with Single and Double Slip Roads.
93B	Chairs for ditto.
54B	Guard Rail Chair for Bridges
23A	Soleplates for 1 in 7 and 1 in 8 Obtuse Angle Crossings with Single Slip Roads 95R. and 85R B.S.
23B	Stretcher Bars for 1 in 7, 7½ and 8 Obtuse Angle Crossings with Single and Double Slip Roads 95R. and 85R B.S.
23C	Soleplates for 1 in 7 and 7½ Obtuse Angle Crossings with Double Slip Roads and 1 in 7½ Obtuse Angle Crossing with Single Slip Road. 95R and 85R B.S.
9A	Three Throws, Types 1 and 2. 95R B.S.
	Rider to 9A showing Soleplate.
45C	1 in 10 Scissors Crossover. 95R B.S.
46C	Chairs for ditto.
35A	1 in 20 Common Crossing. 95R B.S
	Chairs for ditto. Rider to Drawings Nº 36-38.
12A	"F" Undercut Switches) 95R B.S.
	Chairs for ditto. Rider to Drawing Nº 18
Rider to 43A)	1 in 10 Switch Diamond. 95R B.S.

STANDARD RAILWAY EQUIPMENT — PERMANENT WAY.

No. 1.

SLEEPER SPACING & DETAILS OF FASTENINGS.

95 R. B. S. RAIL.

FOR DETAILS OF STANDARD AND FINE THREAD FISHBOLT SEE AMENDED RIDER TO THIS DRAWING DATED APRIL 193

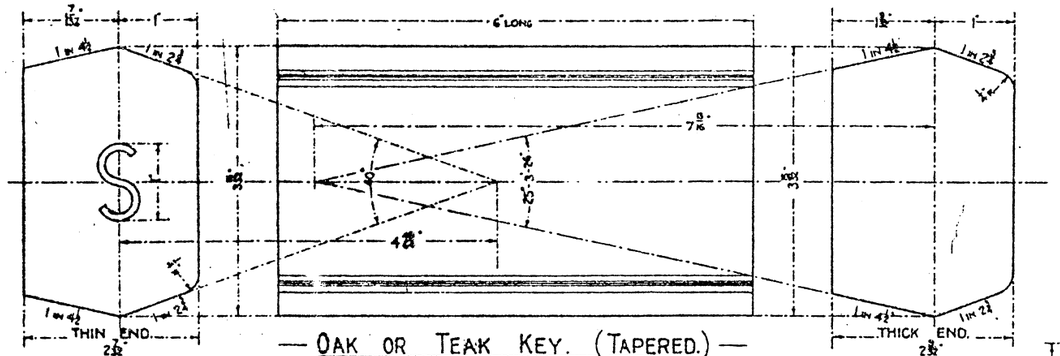

— OAK OR TEAK KEY. (TAPERED.) —

— HALF FULL SIZE. —

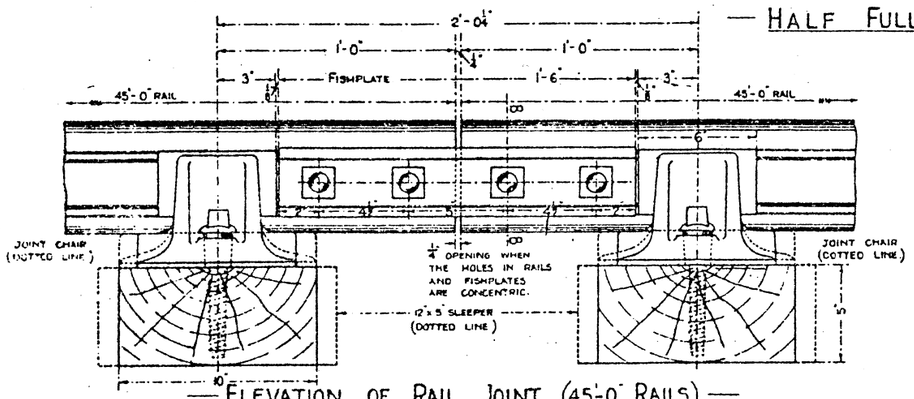

— ELEVATION OF RAIL JOINT. (45'-0" RAILS.) —

SCALE: — 1½ INCHES — 1 FOOT

— FISHBOLT & NUT. —

14 Threads per in

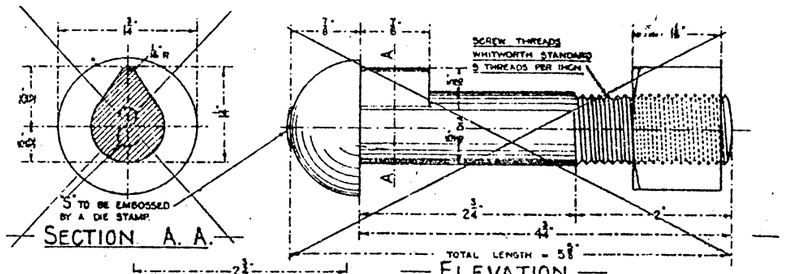

— SECTION A. A. — — ELEVATION. —

— END VIEW OF NU

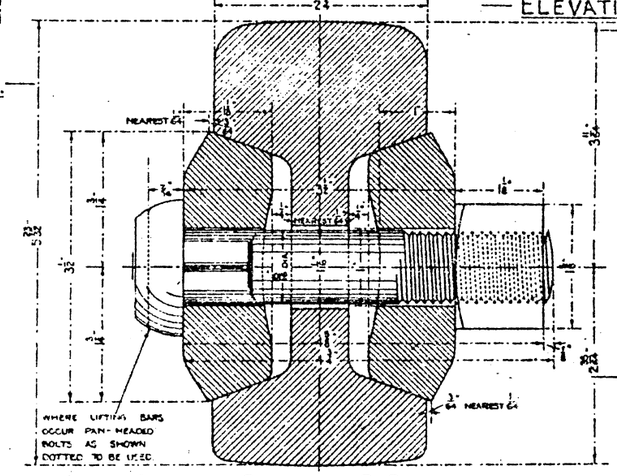

— SECTION B. B. —

— TEAK FERRULE —

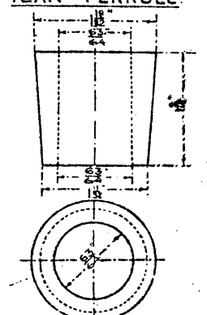

— OAK FERRULE —

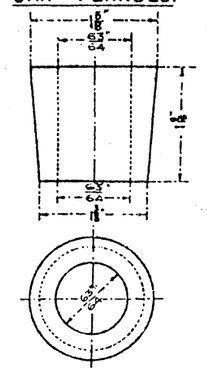

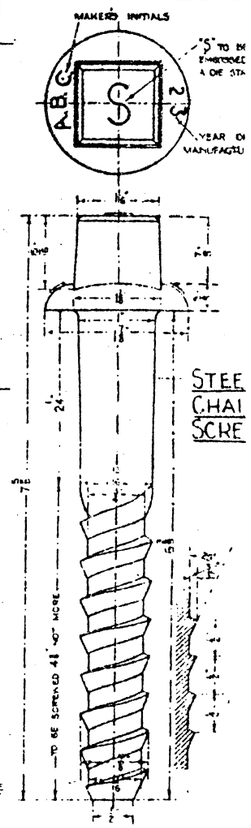

STEE CHAI SCRE

NOTE - BEFORE INSERTING THE CHAIR SCREW THE FERRULE TO BE DRIVEN DOWN UNTIL THE TOP IS ¼" ABOVE THE CHAIR CASTING

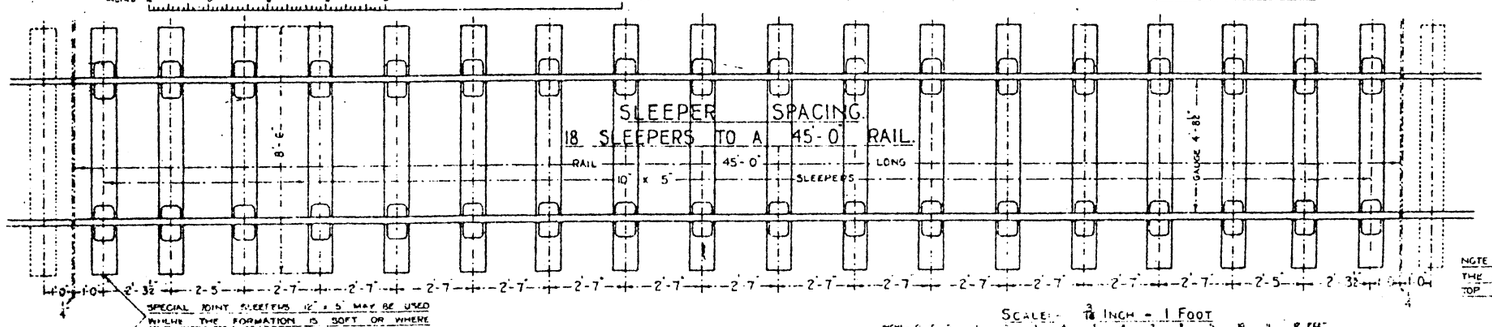

SCALE: — 3/16 INCH = 1 FOOT

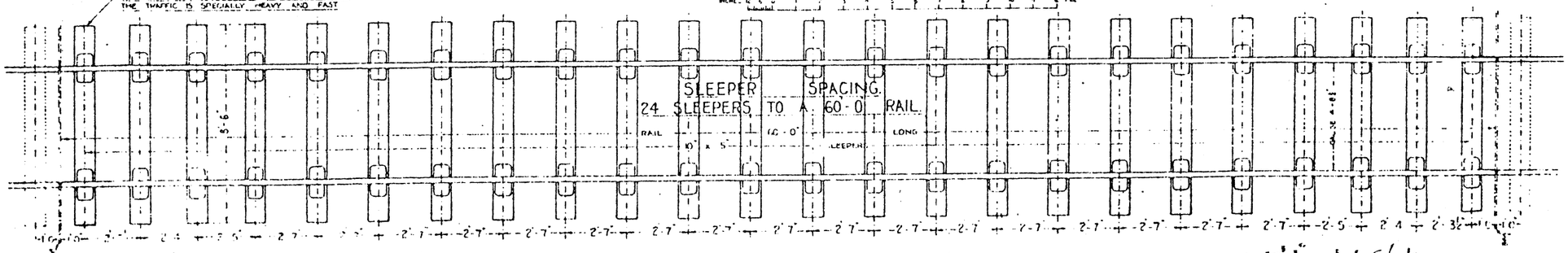

15'-7½ 13'-1½ 10'-5½ 8'-0½

STANDARD RAILWAY EQUIPMENT — PERMANENT WAY

No. 2.

B. S. FISHPLATES & DETAILS OF RAIL DRILLING.

95 R, B. S. RAIL.

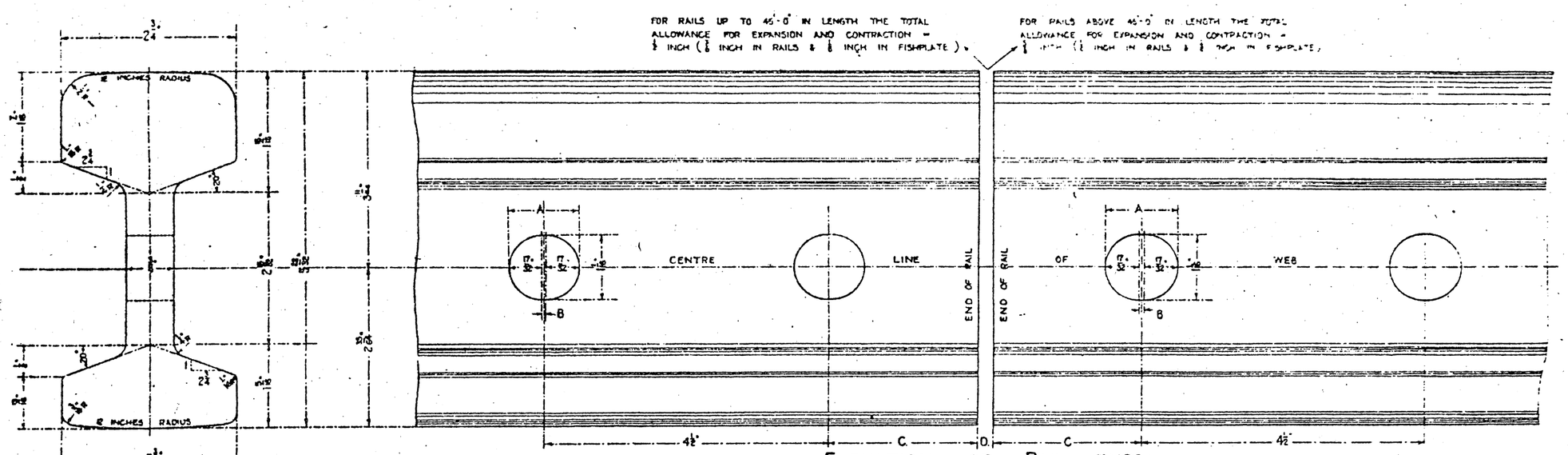

— SECTION OF RAIL. —

— ELEVATION OF RAIL ENDS. —

FOR RAILS UP TO 45'-0" IN LENGTH		FOR RAILS ABOVE 45'-0" IN LENGTH.	
A.	1⅛"	A.	1 3/16"
B.	1/16"	B.	⅛"
C.	2⅞"	C.	2 11/32"
D.	½"	D.	⅜"

CLEARANCE BETWEEN RAILS (DIMENSION D) MEASURED WHEN THE HOLES IN RAILS AND FISHPLATES ARE CONCENTRIC.

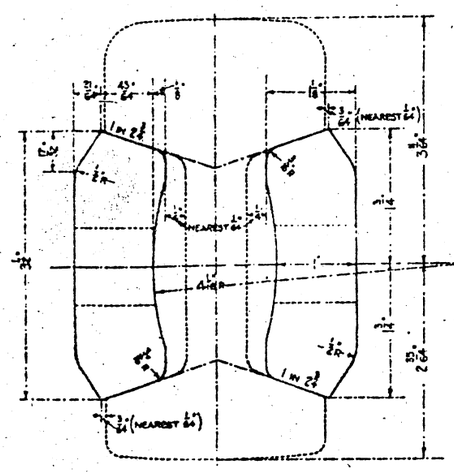

— SECTION OF FISHPLATE. —

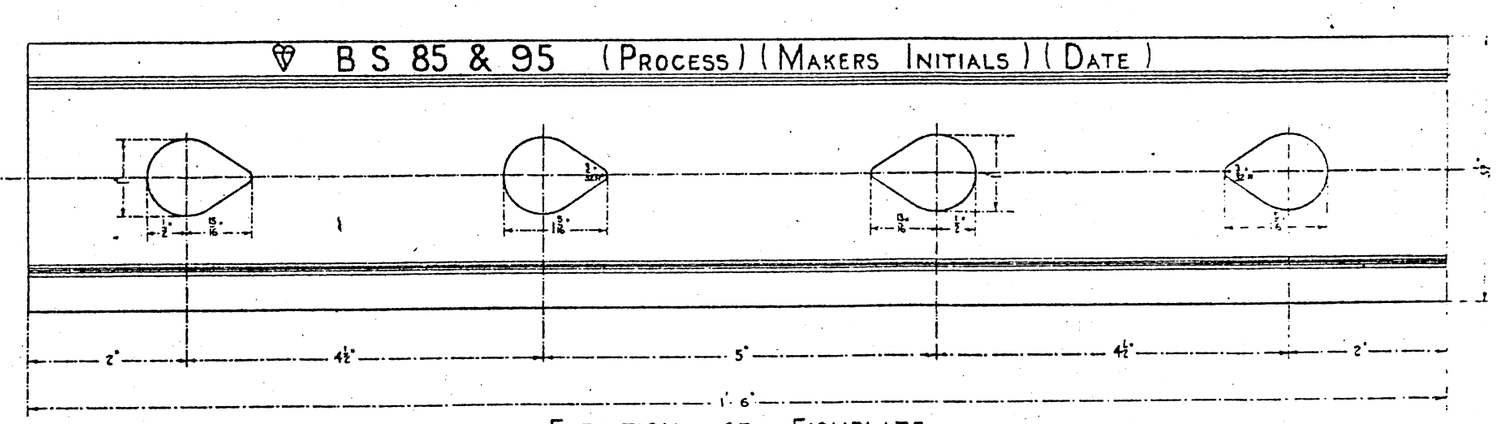

— ELEVATION OF FISHPLATE. —

WEIGHT - 32¼ LB. PER PAIR.

— HALF FULL SIZE. —

STANDARD RAILWAY EQUIPMENT — PERMANENT WAY.

Nº 3.

INSULATED FISHPLATES & DETAILS OF RAIL DRILLING.

95 R. B.S. RAIL.

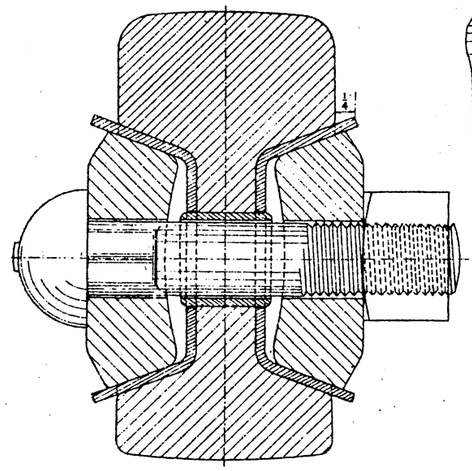

— SECTION A.B. —

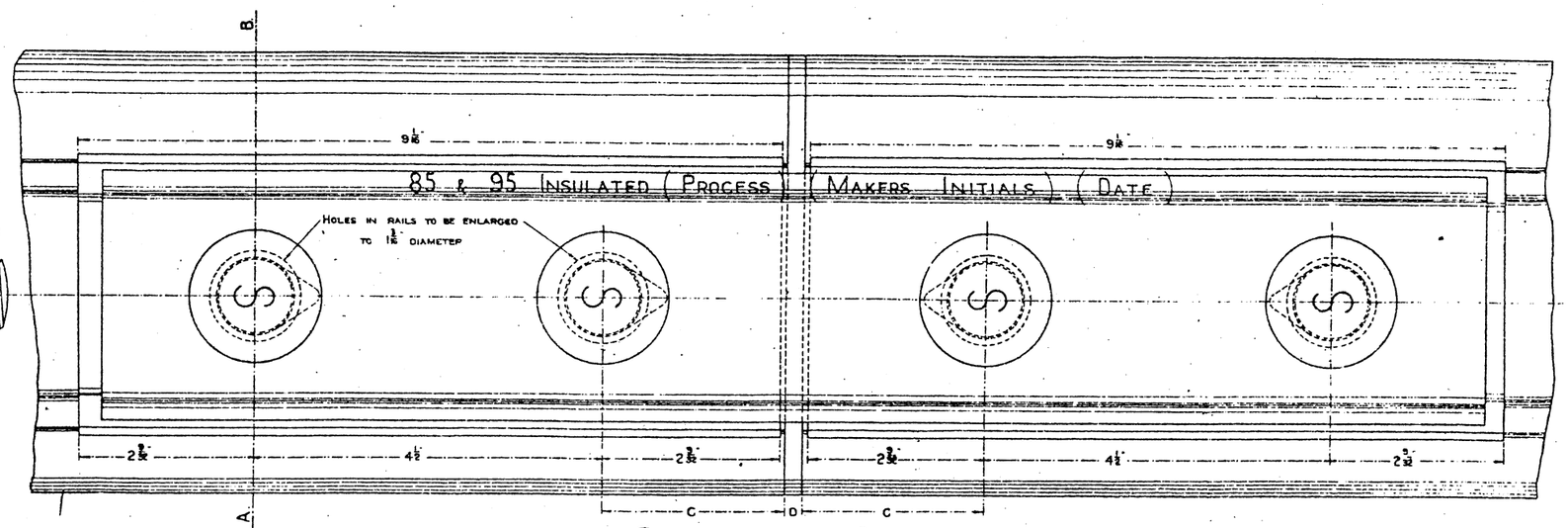

— ELEVATION OF JOINT. —

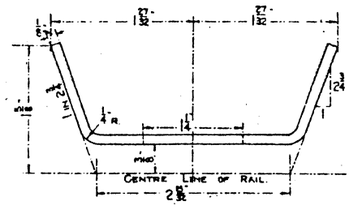

— SECTION OF SIDE PLATE. —

FOR RAILS UP TO 45'-0 IN LENGTH		FOR RAILS ABOVE 45'-0 IN LENGTH.	
C	2 3/8	C	2 11/32
D	1/4	D	5/16

CLEARANCE BETWEEN RAILS (DIMENSION D) MEASURED WHEN THE HOLES IN RAILS & FISHPLATES ARE CONCENTRIC

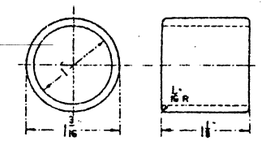

— INSULATING COLLET. —

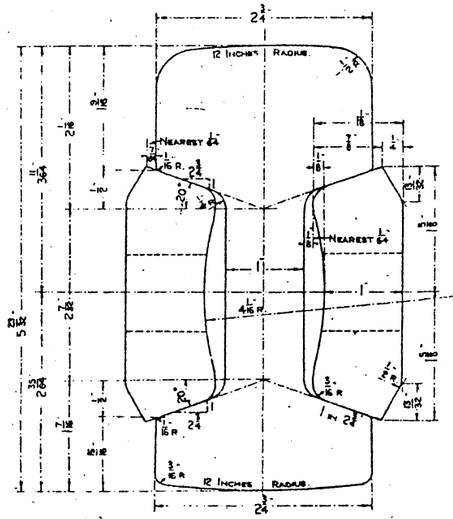

— SECTION OF FISHPLATE.

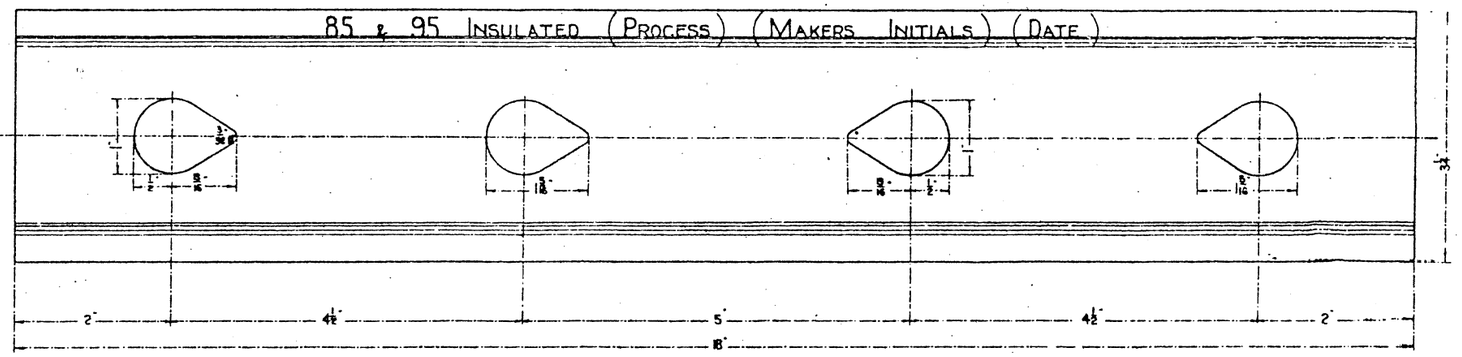

— ELEVATION OF FISHPLATE. —

WEIGHT — 30¼ LB. PER PAIR.

— INSULATING FILLING PIECE. —

INSULATING FILLING PIECE FOR RAILS UP TO 45'-0" IN LENGTH TO BE ¼" THICK.

" " " " " " " OVER 45'-0" " " " " 5/16" "

— HALF FULL SIZE. —

STANDARD RAILWAY EQUIPMENT — PERMANENT WAY.

Nº 4.

COMMON CHAIR. S. I. 46 LB.

95R, B. S. RAIL.

THE 90R. & 85R. B. S. RAILS CAN ALSO BE USED IN THIS CHAIR.

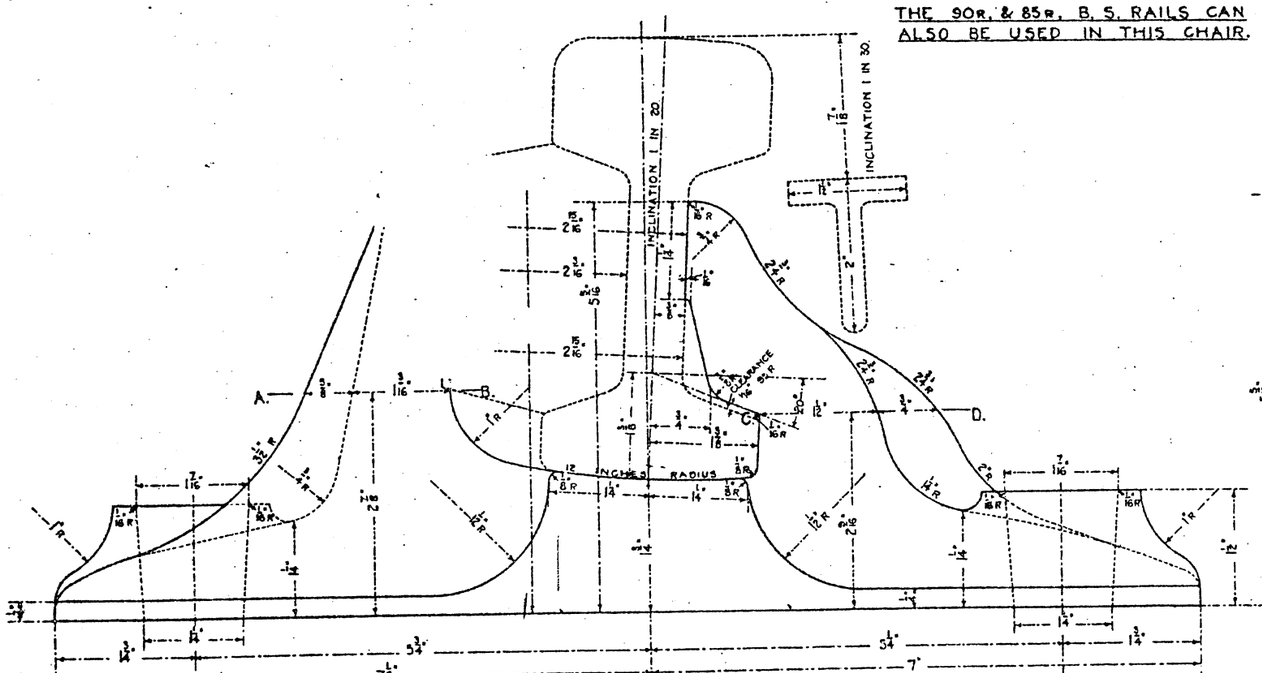

— ELEVATION. —

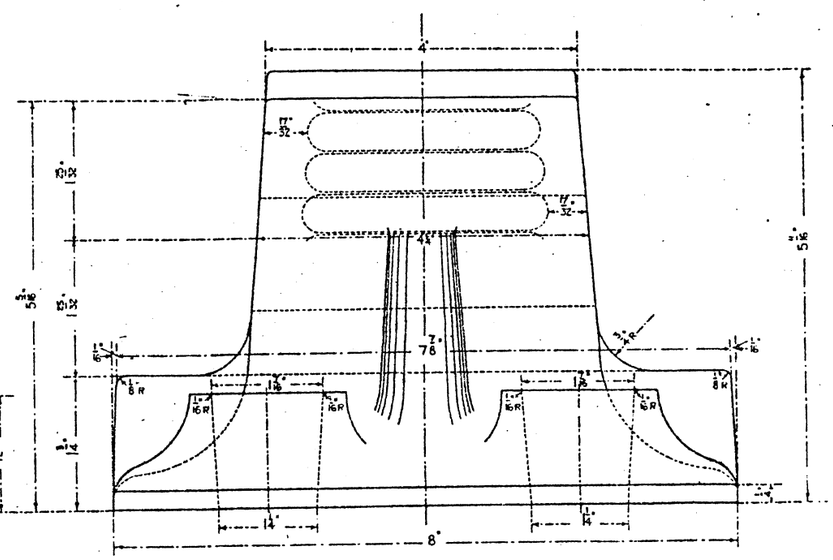

— END ELEVATION. —

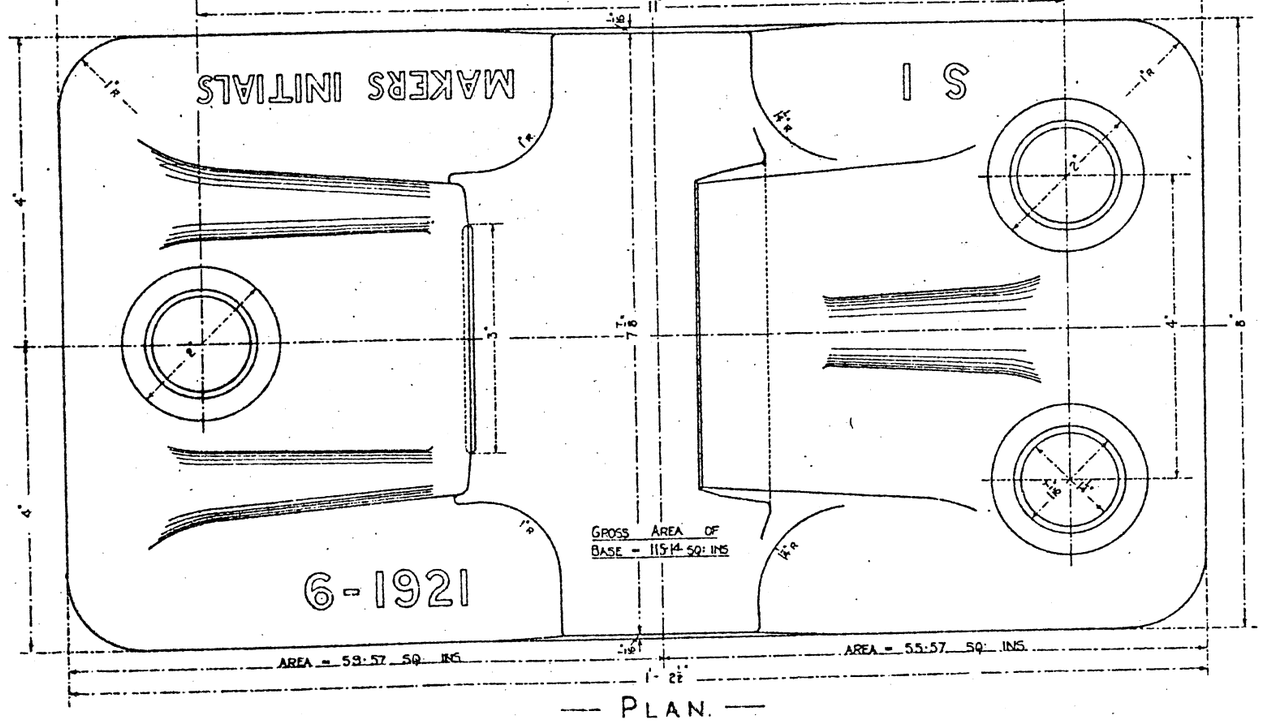

— PLAN. —

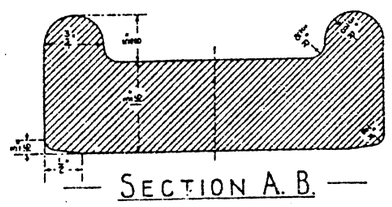

— SECTION A. B. —

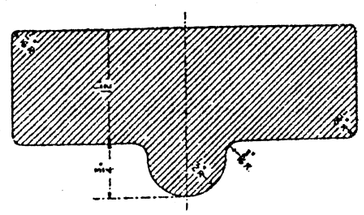

— SECTION C. D. —

— HALF FULL SIZE. —

STANDARD RAILWAY EQUIPMENT — PERMANENT WAY.

No. 5.

JOINT CHAIR. S1-J. 53 LB.

95 R. B. S. RAIL.

THE 90R. & 85R. B. S. RAILS CAN ALSO BE USED IN THIS CHAIR.

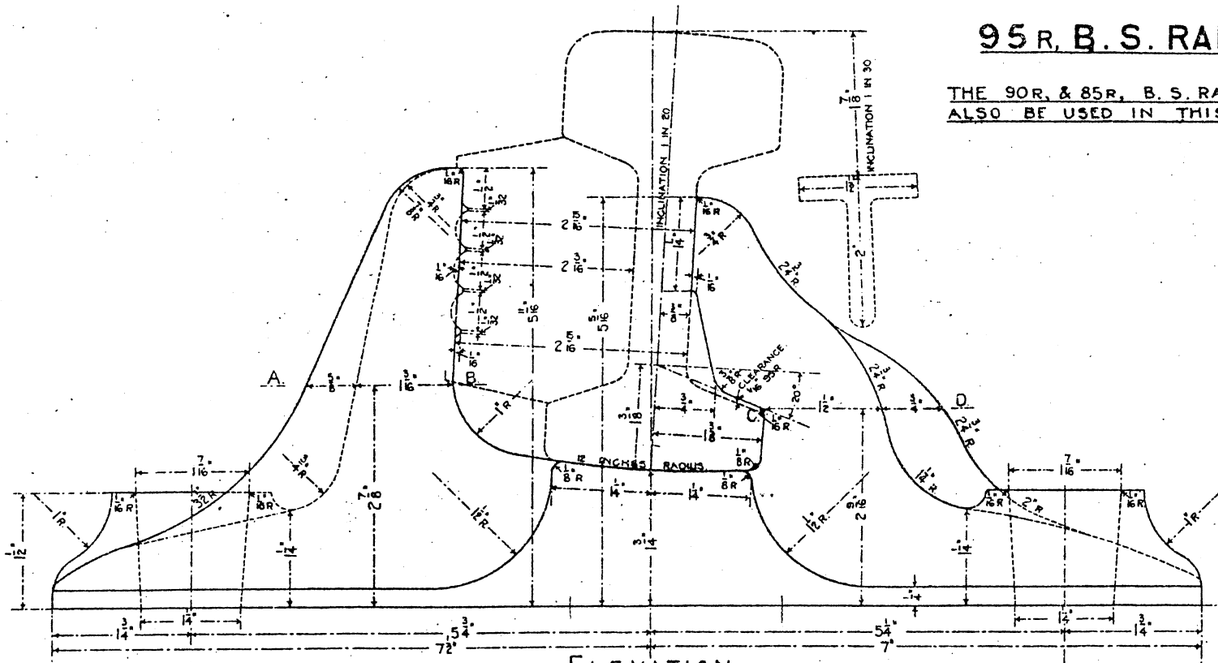

— ELEVATION. —

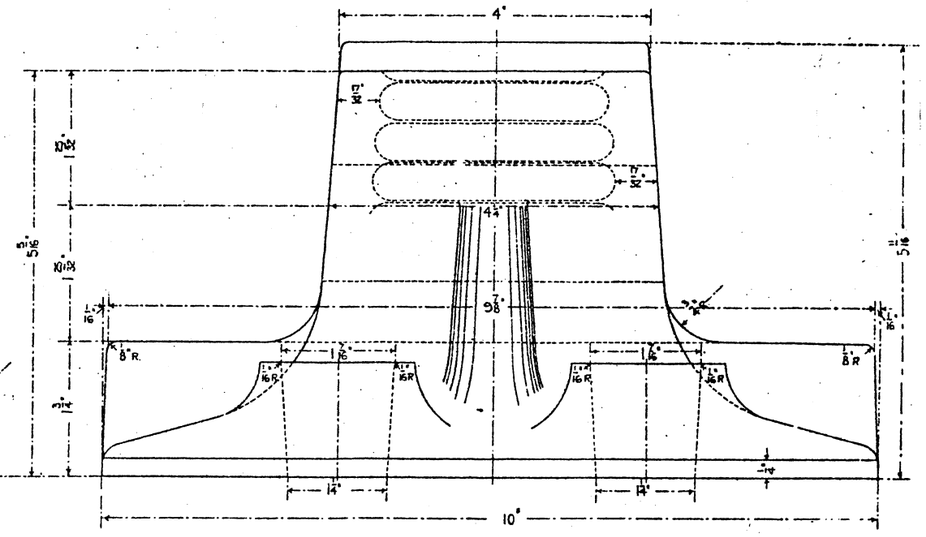

— END ELEVATION. —

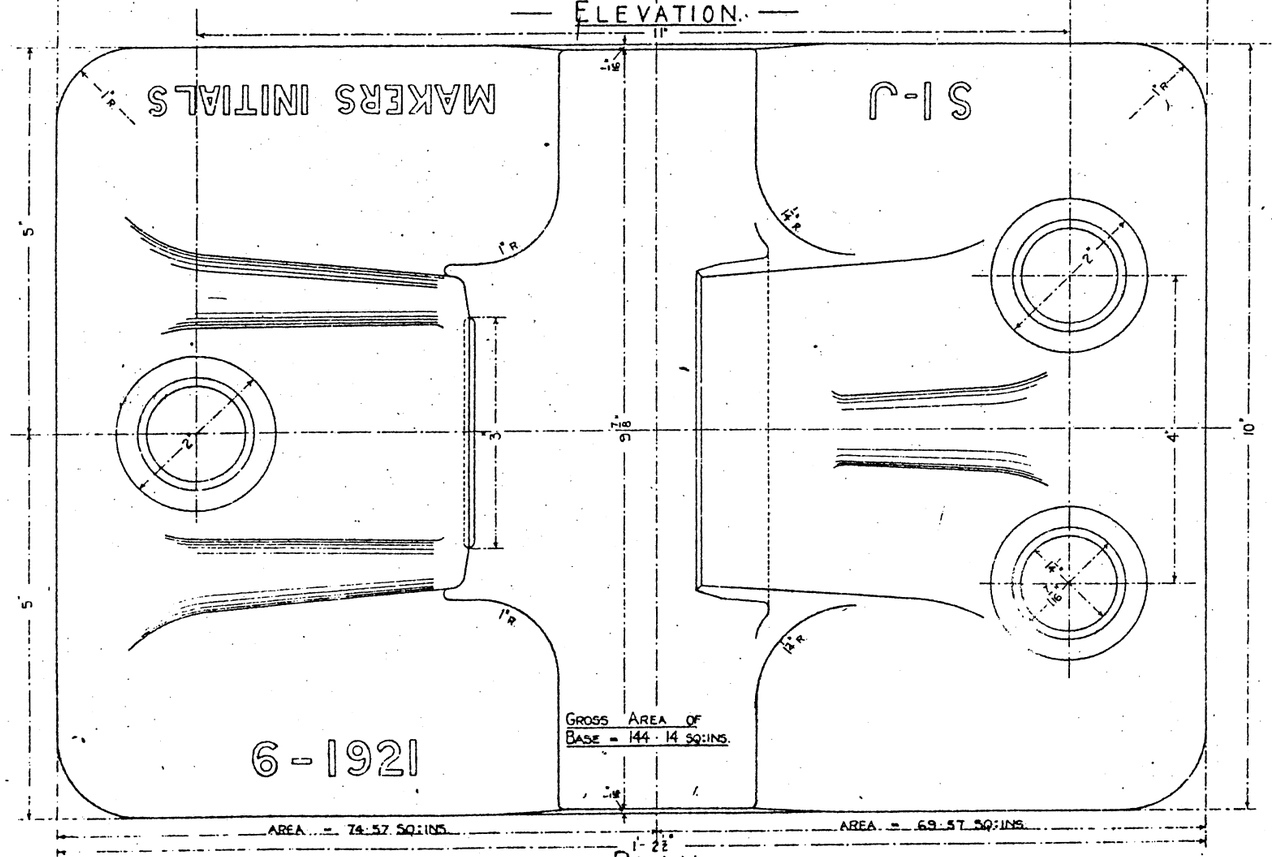

— PLAN. —

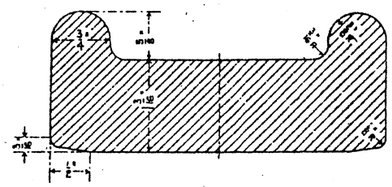

— SECTION A. B. —

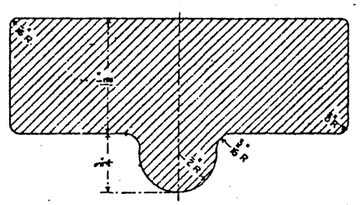

— SECTION C. D. —

— HALF FULL SIZE. —

STANDARD RAILWAY EQUIPMENT — PERMANENT WAY

L. I. CHAIR. 4 LB.

95 R. B. S. RAIL.

No. 6

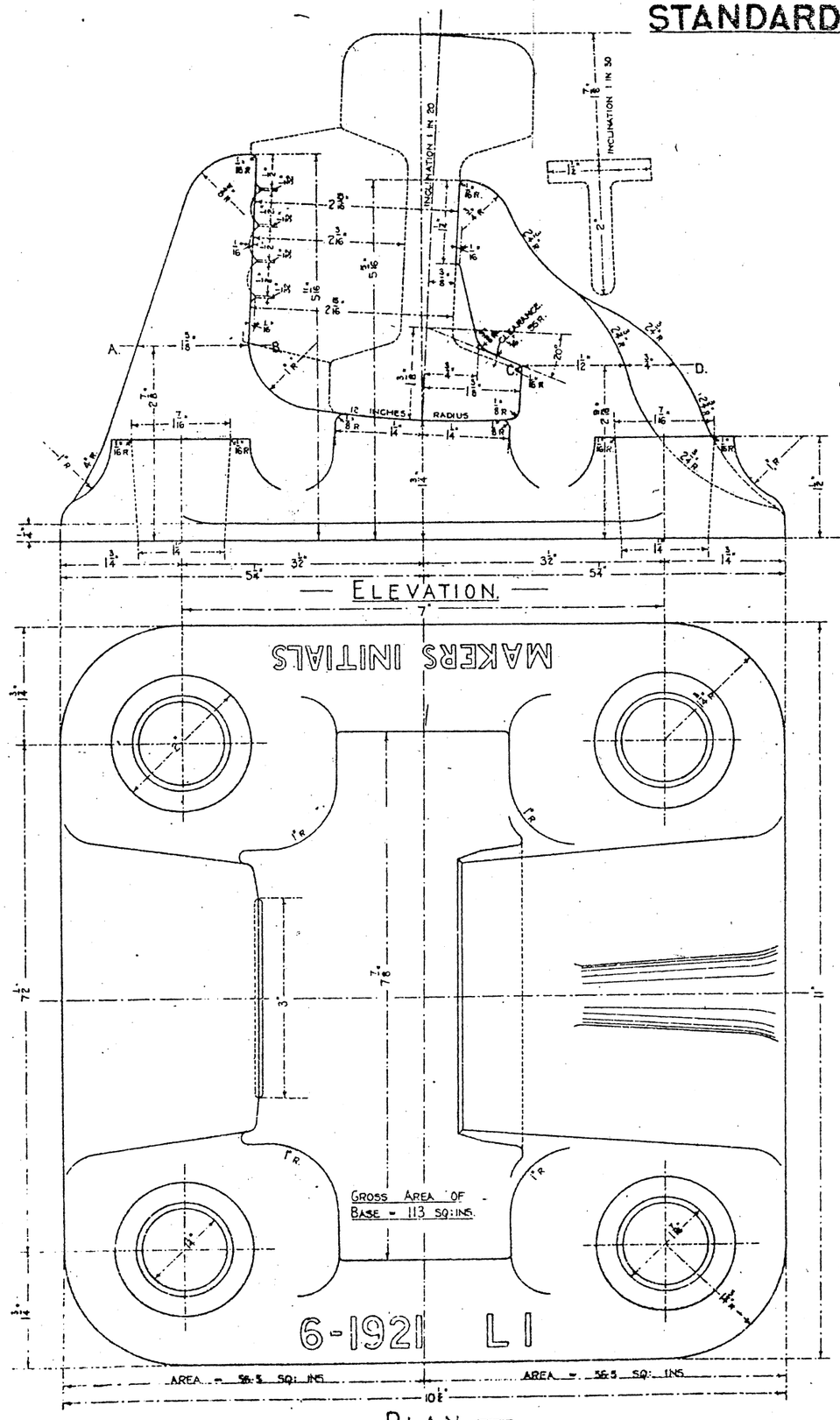

— ELEVATION. —

— PLAN. —

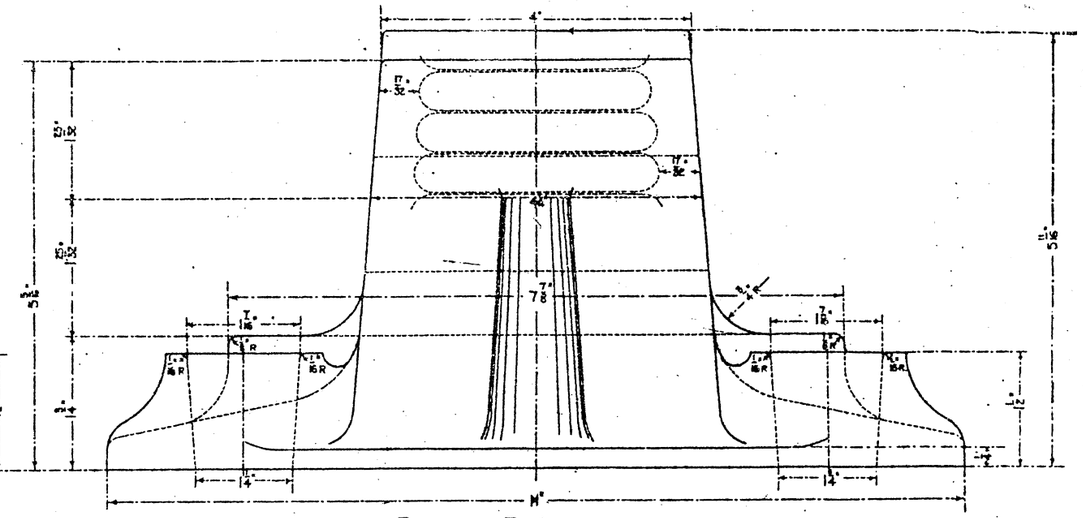

— END ELEVATION. —

THE 90 R. & 85 R. B. S. RAILS CAN ALSO BE USED IN THIS CHAIR.

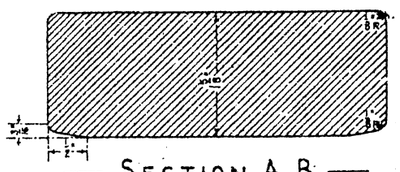

— SECTION A. B. —

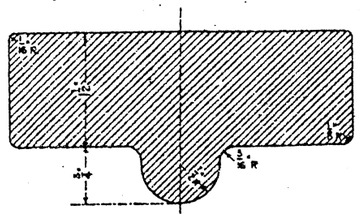

— SECTION C. D. —

— HALF FULL SIZE. —

STANDARD RAILWAY EQUIPMENT — PERMANENT WAY.

Nº 7.

CHECK RAIL CHAIR FOR CURVES. 70 LB.

95 R, B.S. RUNNING RAIL — 85 R, B.S. NEW OR 95 R, B.S. WORN RAIL FOR CHECK.

2 INS. FLANGEWAY CLEARANCE.

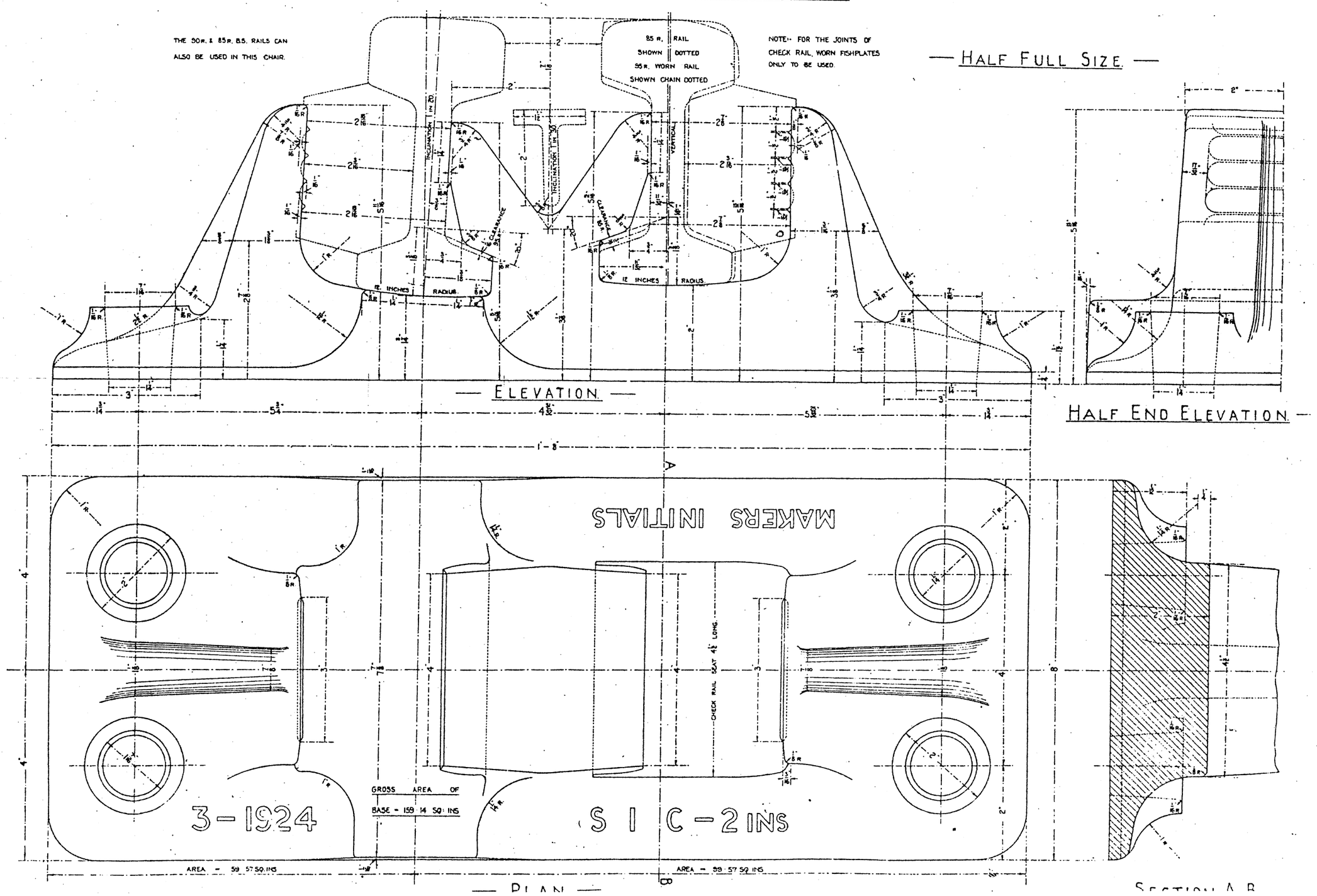

STANDARD RAILWAY EQUIPMENT — PERMANENT WAY.

Nº 7

END CHECK RAIL CHAIR FOR CURVES. 75 LB.

95 R. B. S. RUNNING RAIL — 85 R. B. S. NEW OR 95 R. B. S. WORN RAIL FOR CHECK.

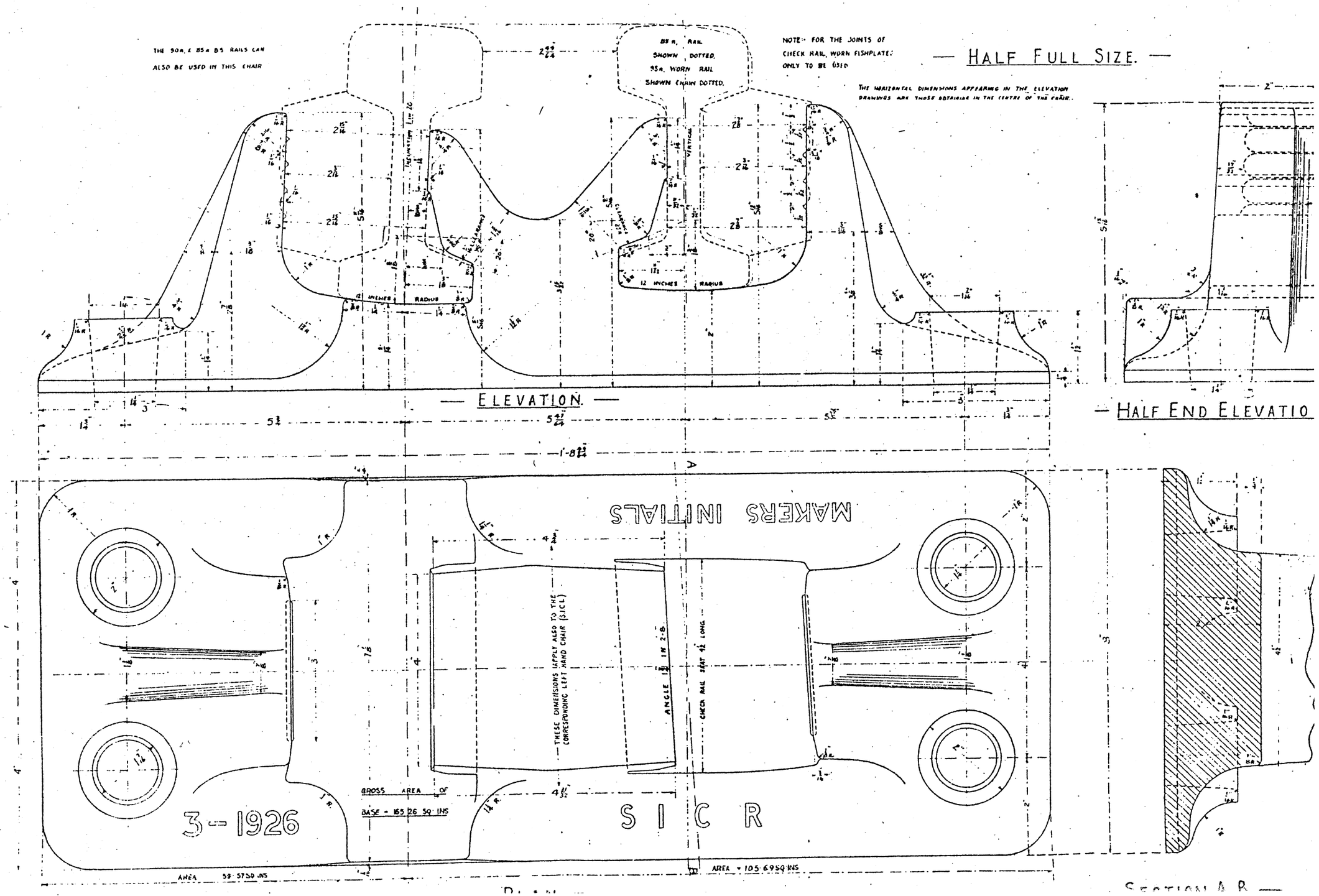

STANDARD RAILWAY EQUIPMENT — PERMANENT WAY.

No. 7b

GUARD RAIL CHAIR.

95R B.S. RAIL.

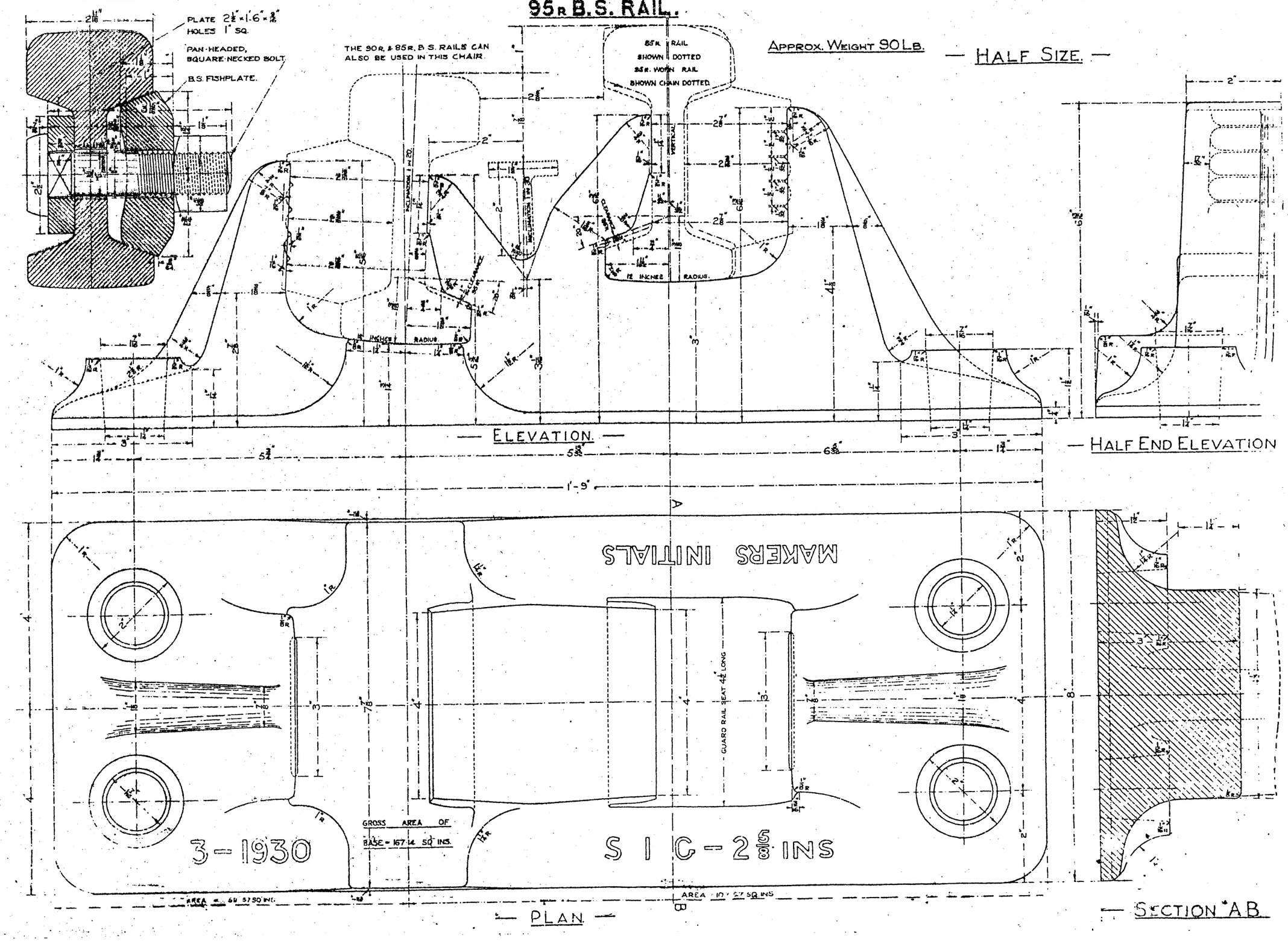

STANDARD RAILWAY EQUIPMENT — PERMANENT WAY.

No. 7c

L. I. GUARD RAIL CHAIR.

95R B.S. RAIL.

— HALF SIZE. —

FOR DETAILS OF GUARD RAIL FASTENING SEE DRAWING No 78.

THE 90R & 85R. B.S. RAILS CAN ALSO BE USED IN THIS CHAIR.

85R RAIL SHOWN DOTTED
95 R. WORN RAIL SHOWN CHAIN DOTTED.

APPROX. WEIGHT 88 LB.

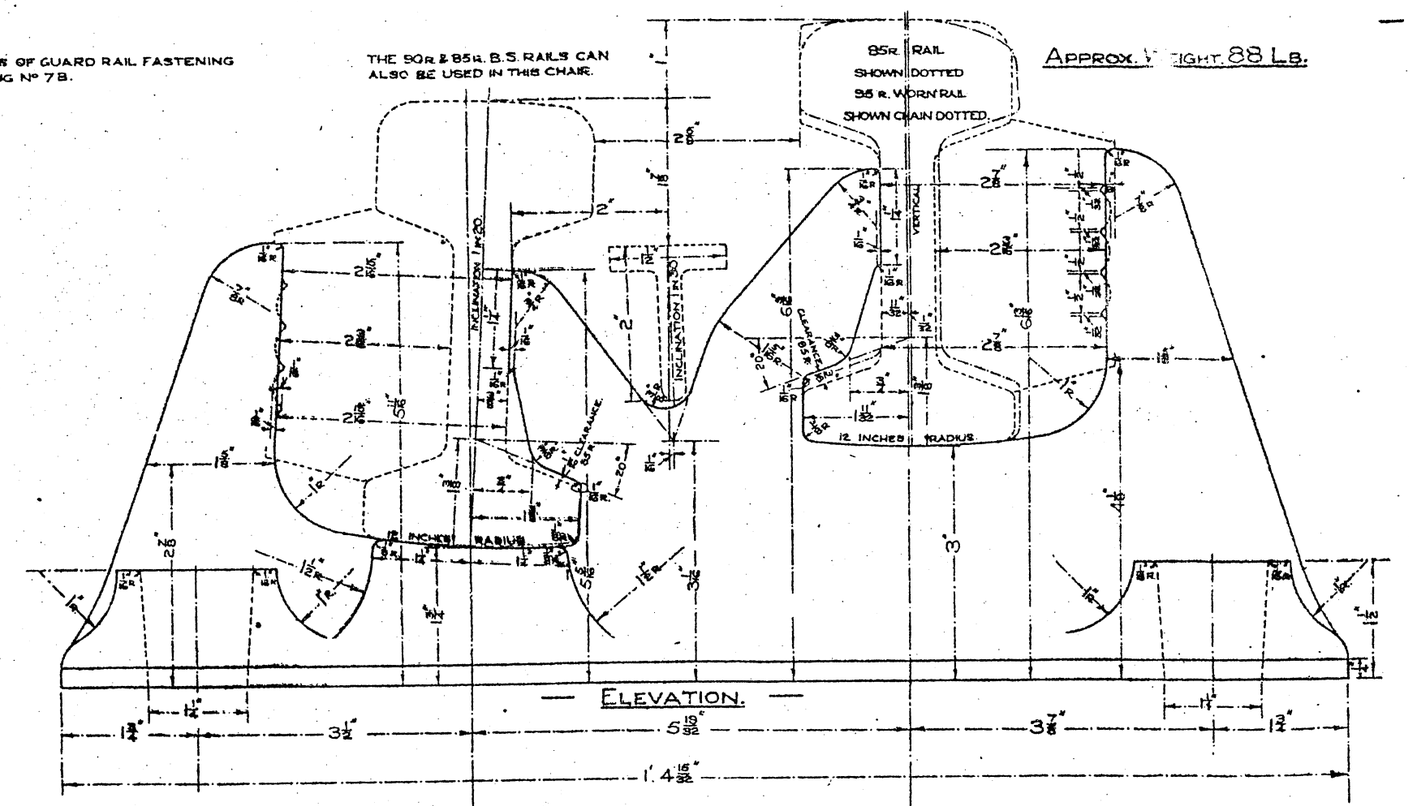

— ELEVATION. —

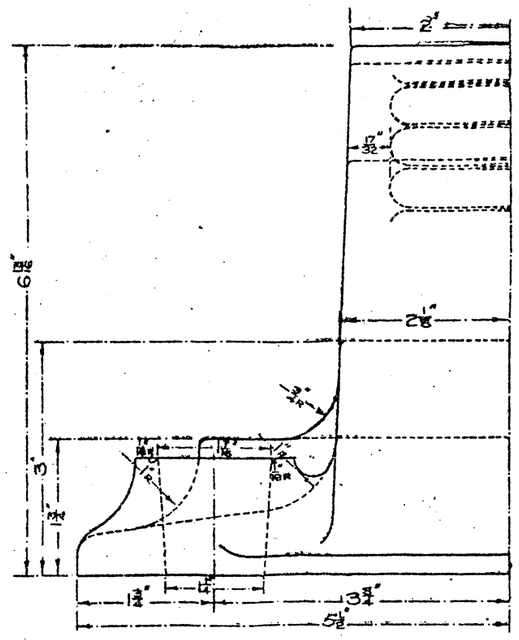

— HALF END ELEVATION. —

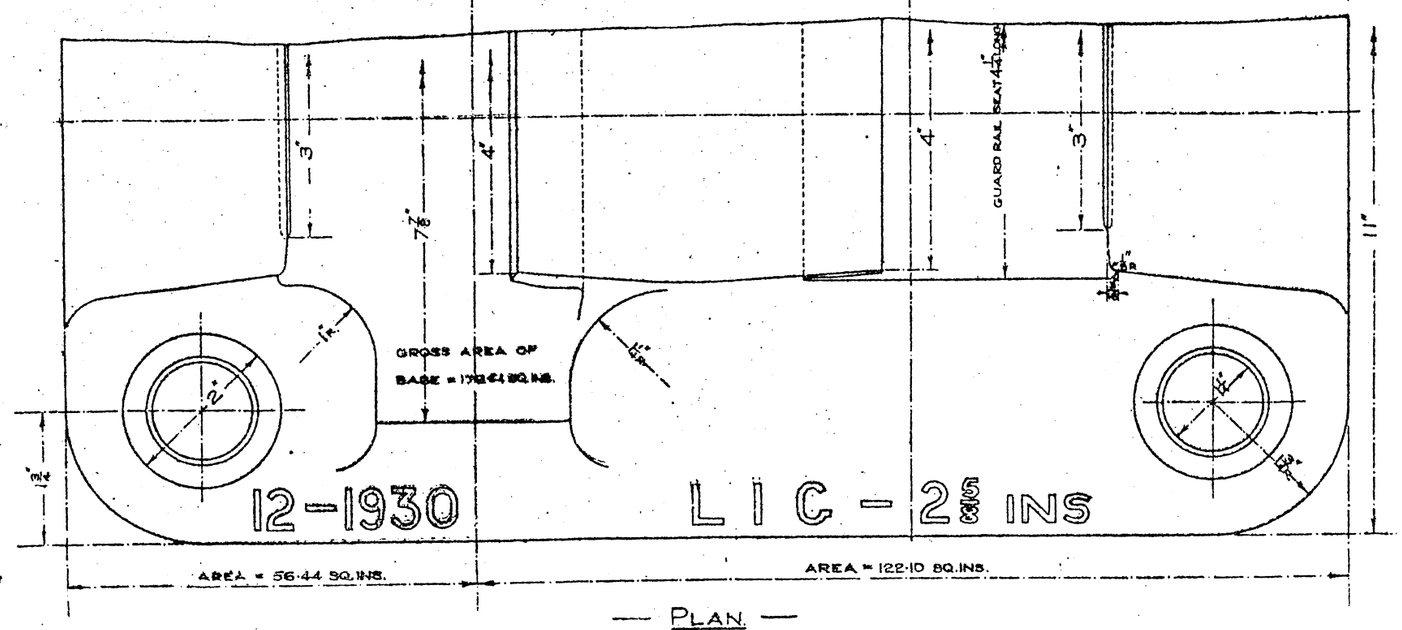

— PLAN. —

STANDARD RAILWAY EQUIPMENT — PERMANENT WAY.

"A" UNDERCUT SWITCHES.

95 R, B. S. RAIL.

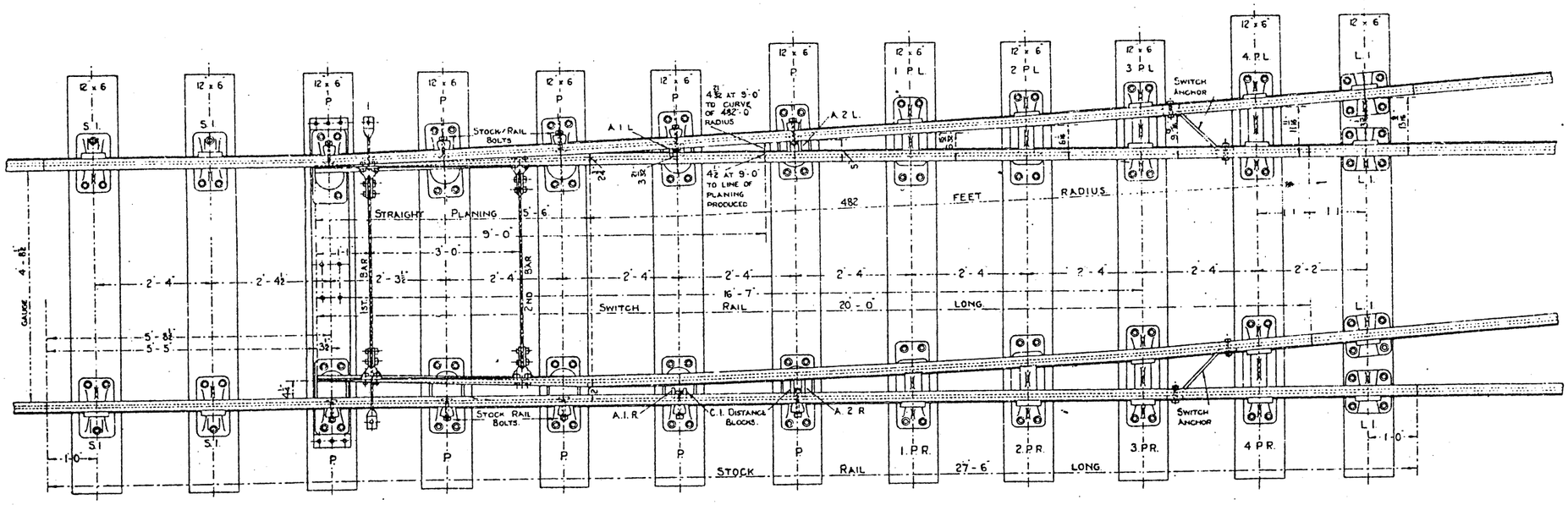

— PLAN —

SCALE:— ⅜ INCH = 1 FOOT.

NOTES

For Details of Chairs, see Drawing No. 18.
" " of Stretcher Bars and Sole Plate see Drawing Nos. 20, 21 and 22.
For Details of Switch Anchor, C.I. Distance Blocks, Stock Rail and Stud Bolts, see Drawing No. 19.
For Details of S.I. Chair, see Drawing No. 4.
" " of L.I. Chair, see Drawing No. 6

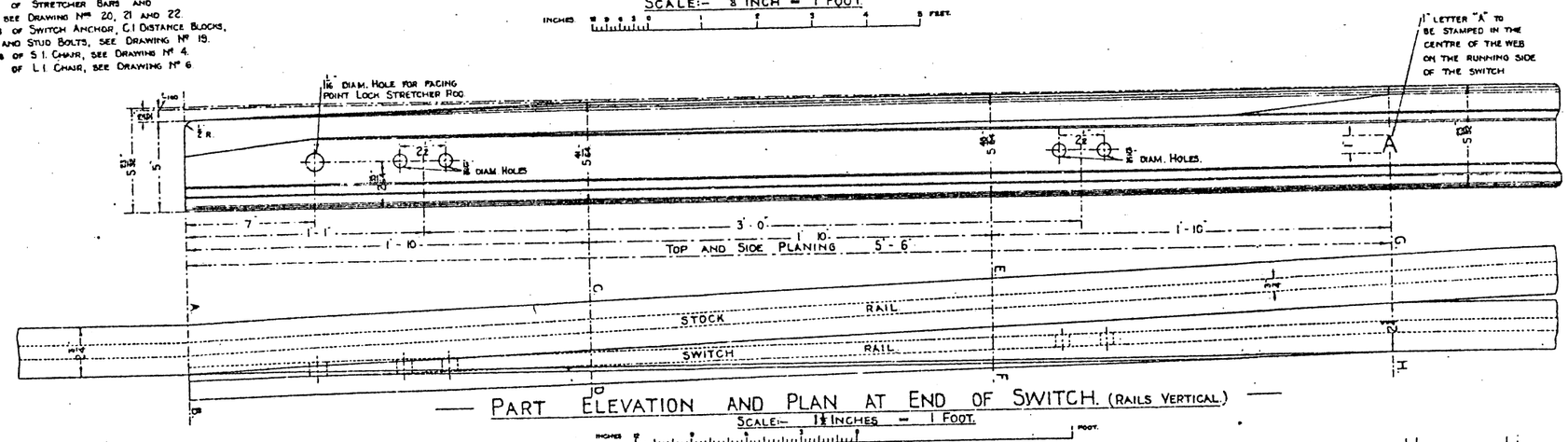

— PART ELEVATION AND PLAN AT END OF SWITCH. (RAILS VERTICAL.) —

SCALE:— 1½ INCHES = 1 FOOT.

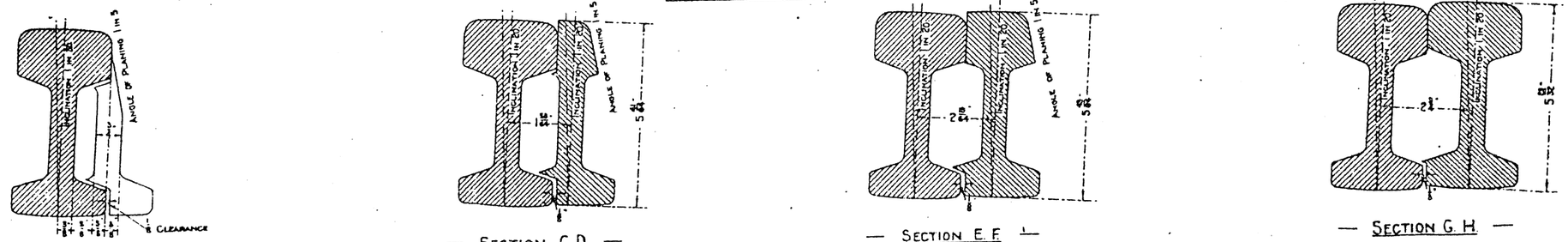

— SECTION A. B. — — SECTION C. D. — — SECTION E. F. — — SECTION G. H. —

— QUARTER FULL SIZE. —

C. J. Fox.

STANDARD RAILWAY EQUIPMENT — PERMANENT WAY.

Nº 9.

"B" UNDERCUT SWITCHES.

95 R. B. S. RAIL.

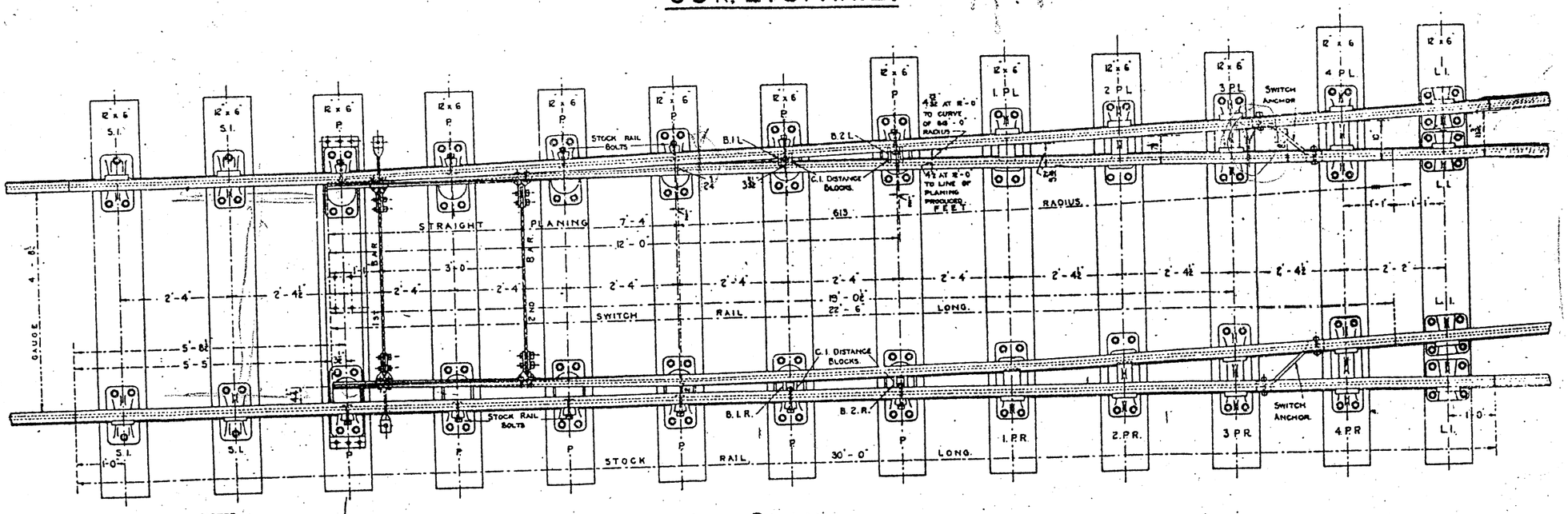

— PLAN —

SCALE:— ⅜ INCH = 1 FOOT.

NOTES

For Details of Chairs, see Drawing Nº 18.
" " of Stretcher Bars and Sole Plate, see Drawing Nos 20, 21 and 22.
For Details of Switch Anchor, C.I. Distance Blocks, Stock Rail and Stud Bolts, see Drawing Nº 19.
For Details of S.I. Chair, see Drawing Nº 4.
" " of L.I. Chair, see Drawing Nº 6.

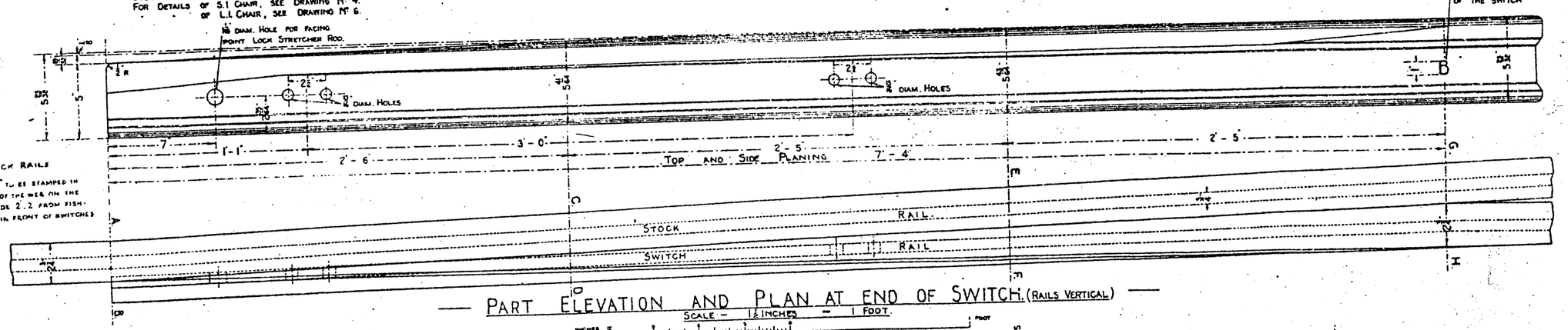

— PART ELEVATION AND PLAN AT END OF SWITCH. (RAILS VERTICAL) —

SCALE — 1½ INCHES = 1 FOOT.

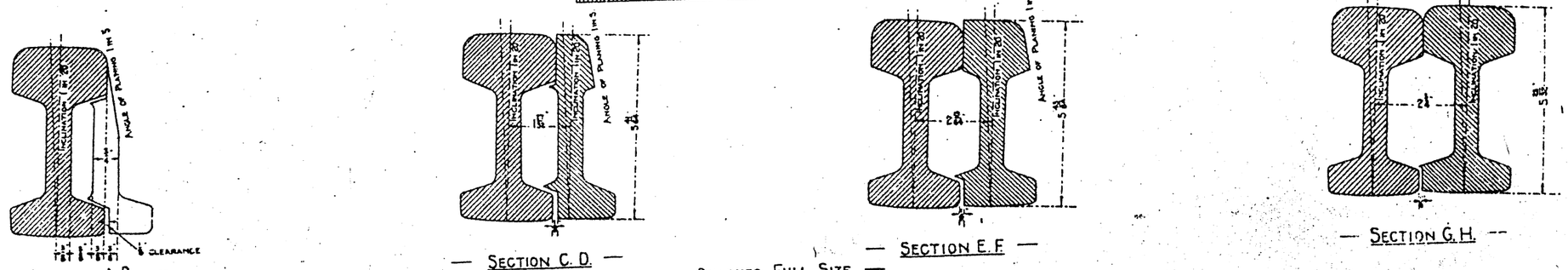

— SECTION A.B. — — SECTION C.D. — — SECTION E.F. — — SECTION G.H. —

— QUARTER FULL SIZE. —

STANDARD RAILWAY EQUIPMENT — PERMANENT WAY.

Nº 9

THREE-THROWS. TYPES Nºs 1 & 2.

95R. B. S. RAIL.

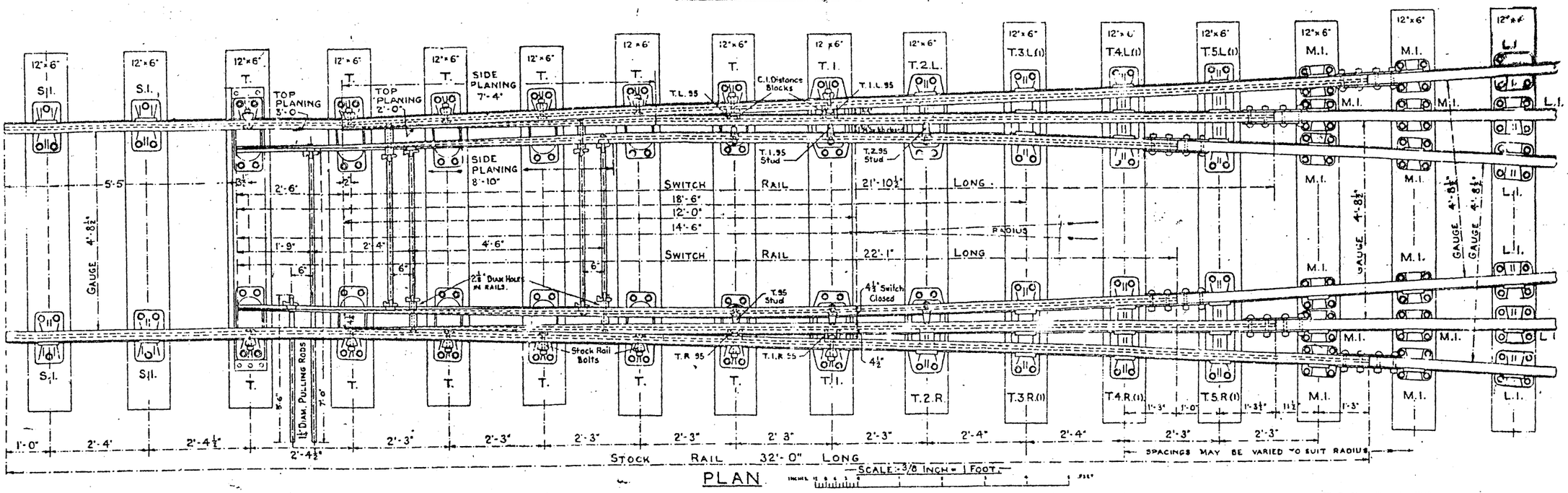

PLAN

T. CHAIR. — Approx. Wt. = 70-LB.

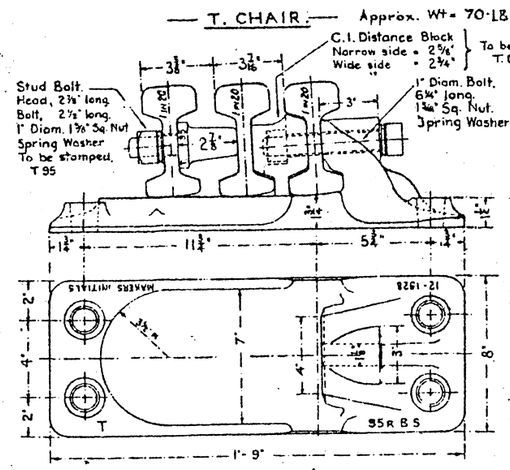

T.1. CHAIR. — Approx. Wt. = 90-LB.

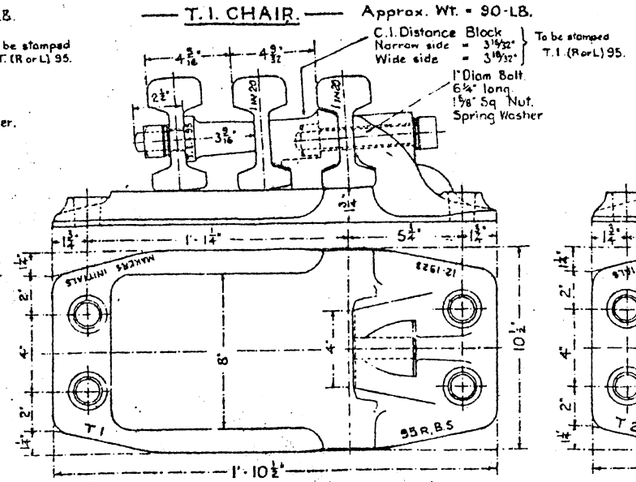

T.2.R. CHAIR. — Approx. Wt. = 100-LB.

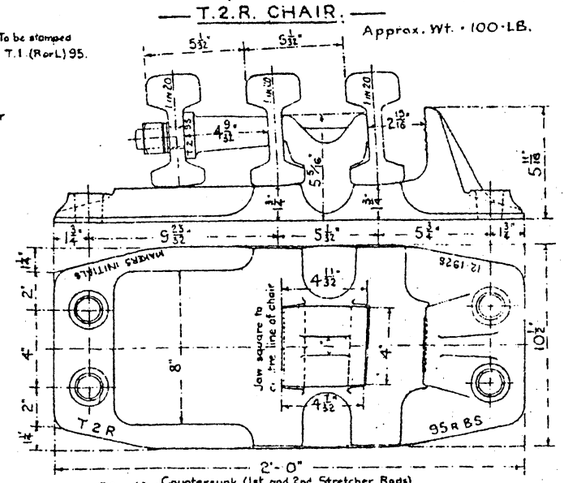

T.3.R. TO T.5.R. CHAIRS.

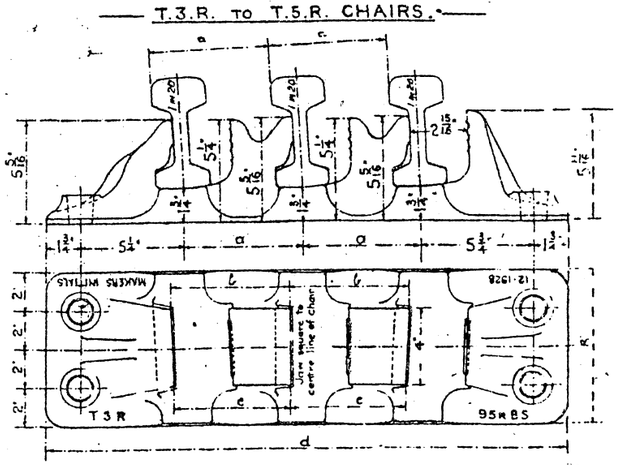

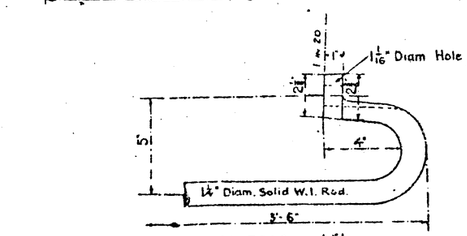

DETAILS OF PULLING RODS.

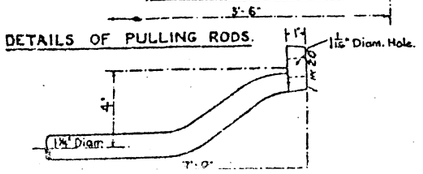

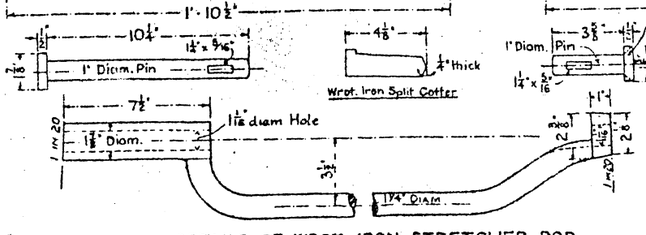

DETAILS OF WROT. IRON STRETCHER ROD.

SCALE:- 1½ INCHES = 1 FOOT

Countersunk (1st and 2nd. Stretcher Rods)

NOTES.

For details of Cast Iron Distance Blocks, Stud Bolts, Stock Rail Bolts, see Drawing Nº 19.
All Bolts and Nuts to conform to B.S. Specification Nº 64, and to be fitted with Spring Washers.
The rail jaws of the T.3, T.4, and T.5 Chairs to conform to the profile of the rail jaw of the S.I. Chair (Drawing Nº 4) subject however to the essential difference in the horizontal inclination necessitated by the angle of the switch and stock rails.
For details of the key jaw, see Drawing Nº 18.
For details of the T Chair, see Drawing Nº 18A.
For details of the L.I. Chair, see Drawing Nº 6.
For details of the M.I. Chair, see Drawing Nº 47.
All chairs shewn on the above drawing to be supplied by the Manufacturer.
Keys supplied by the Company.
The Three-throws must be laid down complete before being offered for inspection to the Engineer, or his representative.

DIMENSIONS OF T.3.R. TO T.5.R. CHAIRS.

CHAIR	a	b	c	d	APPROX WEIGHT
T.3.R. (1)	5 31/32"	6 5/32"	5 63/32"	2'-2 7/16"	107-LB
T.4.R. (1)	7 1/16"	7 29/32"	6 31/32"	2'-4 3/8"	118-LB
T.5.R. (1)	8¼"	8 11/32"	8 5/32"	2'-7"	130-LB

These chairs to be used on three-throws with sharp (400ft) turnouts where the centre road is straight. To be ordered:- 95R.B.S — Three-throws Type Nº 1.

T.3.R. (2)	5 15/16"	6"	5 3/8"	2'-2 3/8"	105-LB
T.4.R (2)	6 27/32"	6 29/32"	6 27/32"	2'-4 3/16"	114-LB
T.5.R. (2)	7¾"	7 13/16"	7 11/16"	2'-6"	124-LB

The above dimensions apply also to the corresponding L chairs.

These chairs to be used on three-throws with flat (800ft) turnouts where the centre road is straight and on all three-throws where outside road is straight. To be ordered:- 95R.B.S — Three-throws. Type Nº 2.

STANDARD RAILWAY EQUIPMENT — PERMANENT WAY.

Nº 10.

"C" UNDERCUT SWITCHES.

95 R. B. S. RAIL.

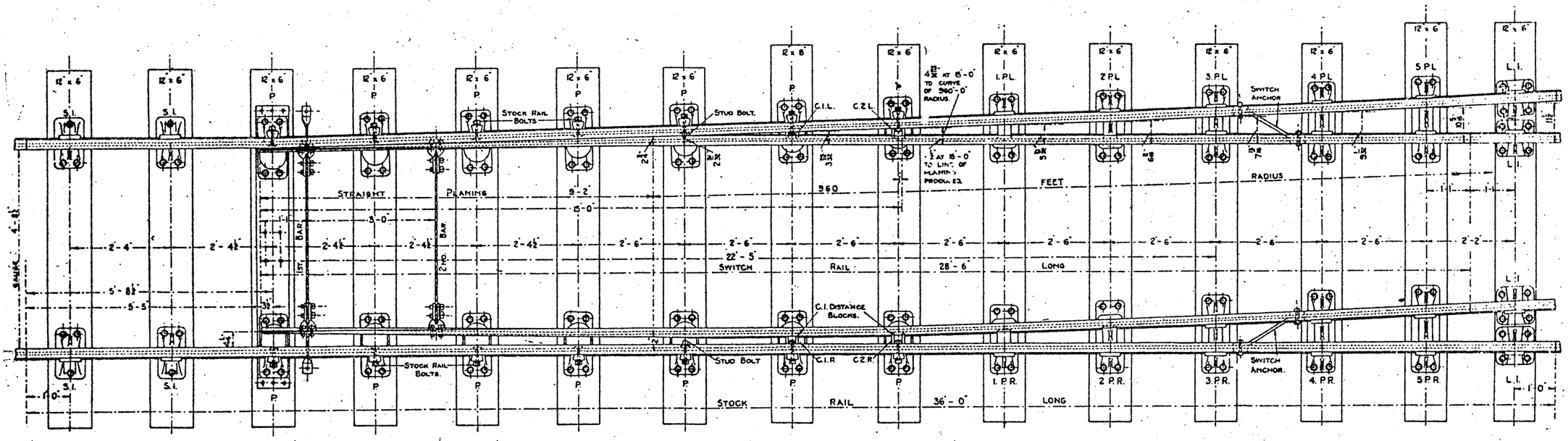

NOTES.

For Details of Chairs, see Drawing Nº 10.
" " of Stretcher Bars and Sole Plate, see Drawing Nos. 20, 21, and 22
For Details of Switch Anchor, C.I. Distance Blocks, Stock Rail and Stud Bolts, see Drawing Nº 19
For Details of S.I. Chair, see Drawing Nº 4
" " of L.I. Chair, see Drawing Nº 6.

— PLAN. —

Scale:- 3/8 Inch = 1 Foot.

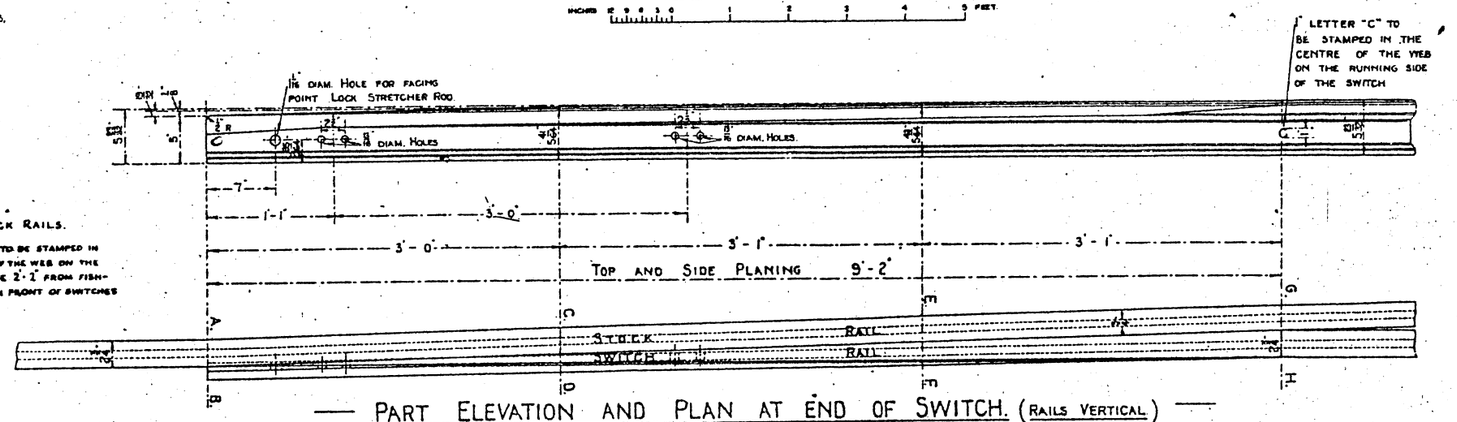

— PART ELEVATION AND PLAN AT END OF SWITCH. (Rails Vertical) —

Scale:- 3/4 Inches = 1 Foot.

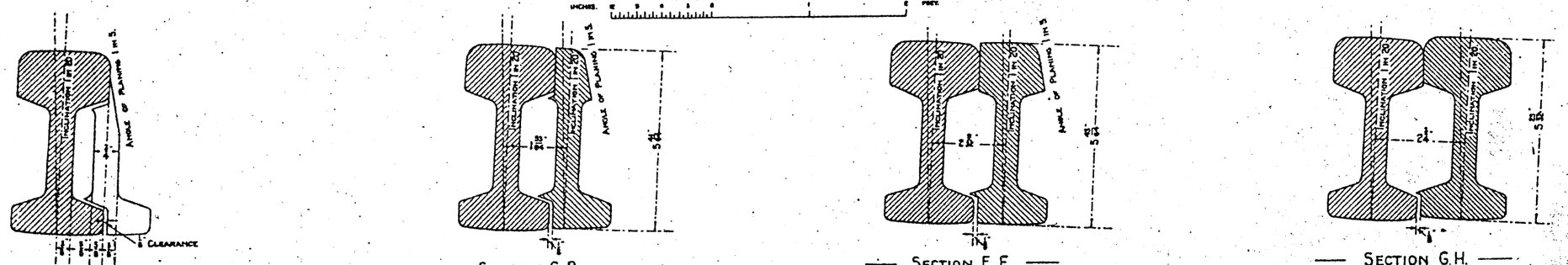

— Section A.B. — — Section C.D. — — Section E.F. — — Section G.H. —

— Quarter Full Size. —

STANDARD RAILWAY EQUIPMENT — PERMANENT WAY.

Nº 11.

"D" UNDERCUT SWITCHES.

95 R. B. S. RAIL.

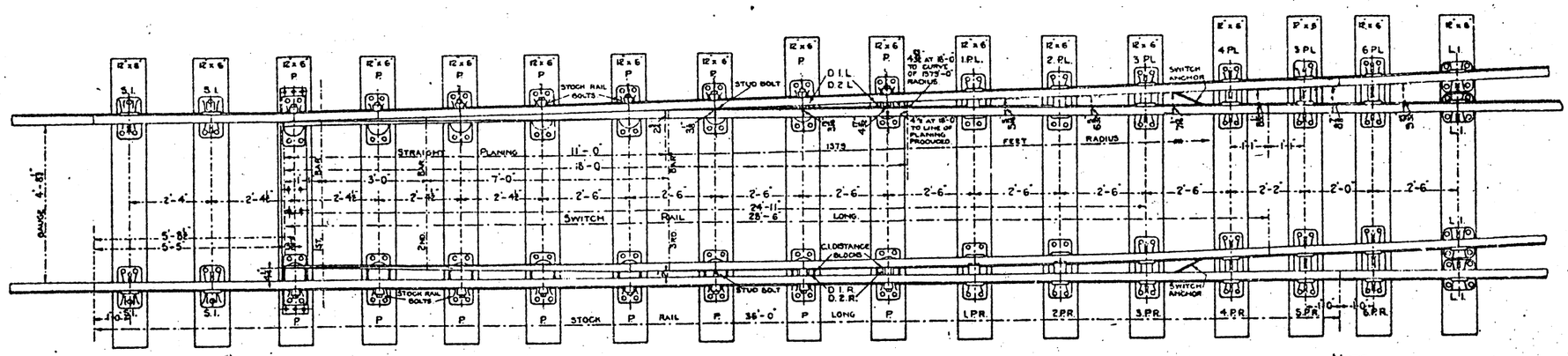

NOTES.

For details of Chairs, see Drawing Nº 18.
" " of Stretcher Bars, and Sole Plates, see Drawing Nºs 20, 21 and 22.
For details of Switch Anchor, C.I. Distance Blocks Stock Rail and Stud Bolts, see Drawing Nº 19.
For details of S.I. Chair see Drawing Nº 4.
" " of L.I. Chair see Drawing Nº 6.

— PLAN. —

SCALE:— ¼ INCH = 1 FOOT.

NOTE.

Where track circuiting is in operation switch and stock rails will require to be lengthened or, alternatively, closure rails used.

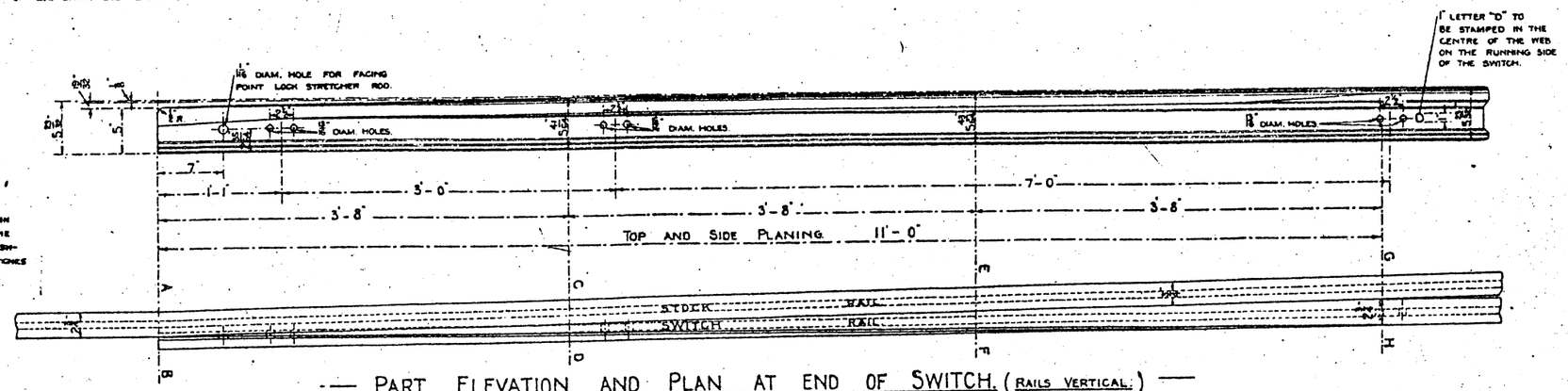

STOCK RAILS.

1" LETTER "D" TO BE STAMPED IN THE CENTRE OF THE WEB ON THE RUNNING SIDE 2'-2" FROM FISH-JOINT END, IN FRONT OF SWITCHES

— PART ELEVATION AND PLAN AT END OF SWITCH. (RAILS VERTICAL.) —

SCALE:— ¼ INCH = 1 FOOT.

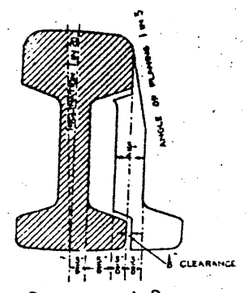

— SECTION A. B. —

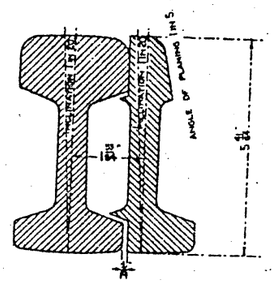

— SECTION C. D. —

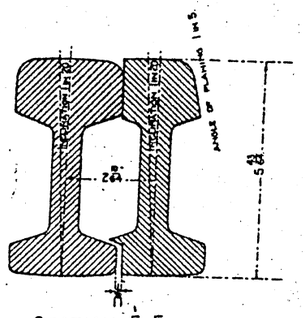

— SECTION E. F. —

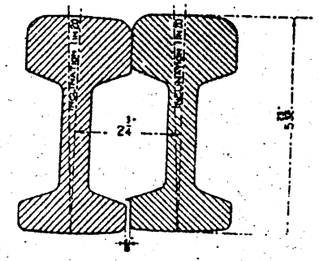

— SECTION G. H. —

— QUARTER FULL SIZE. —

STANDARD RAILWAY EQUIPMENT — PERMANENT WAY.

Nº 12.

"E" UNDERCUT SWITCHES.

95 R, B. S. RAIL.

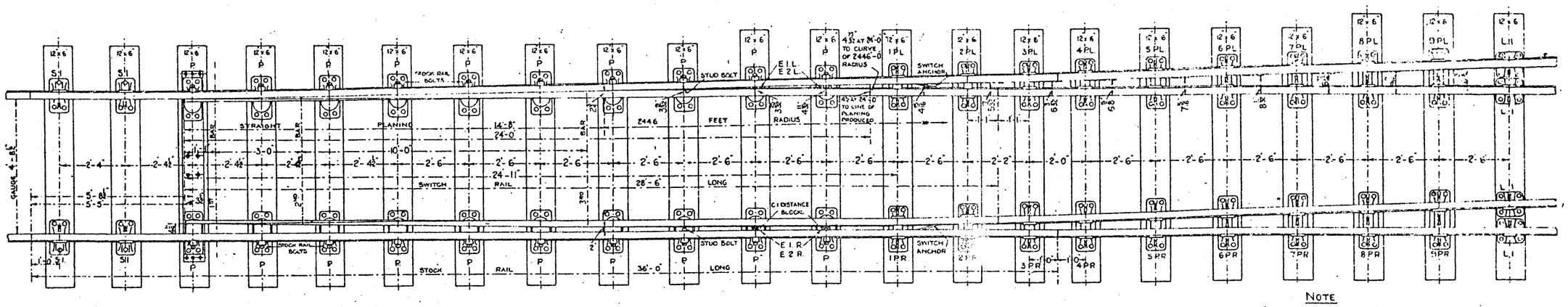

— PLAN. —

SCALE:- ¾ INCH = 1 FOOT.

NOTES.

FOR DETAILS OF CHAIRS, SEE DRAWING Nº 18.
" " OF STRETCHER BARS AND SOLE PLATE SEE DRAWING Nºs 20, 21, AND 22.
FOR DETAILS OF SWITCH ANCHOR, C.I. DISTANCE BLOCKS STOCK RAIL AND STUD BOLTS, SEE DRAWING Nº 19
FOR DETAILS OF S.I. CHAIR, SEE DRAWING Nº 4.
" " OF L.I. CHAIR SEE DRAWING Nº 6.

NOTE

WHERE TRACK CIRCUITING IS IN OPERATION SWITCH AND STOCK RAILS WILL REQUIRE TO BE LENGTHENED OR, ALTERNATIVELY, CLOSURE RAILS USED

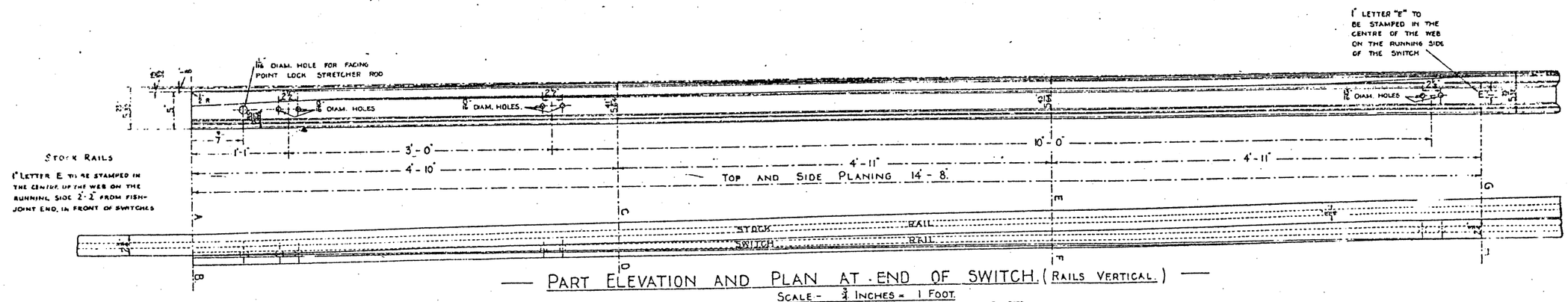

— PART ELEVATION AND PLAN AT END OF SWITCH. (RAILS VERTICAL.) —

SCALE - ¾ INCHES = 1 FOOT.

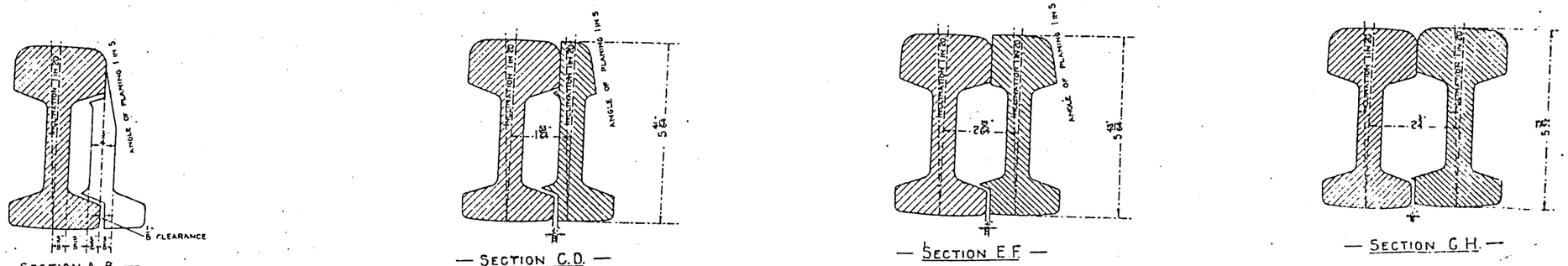

— SECTION A. B. — — SECTION C. D. — — SECTION E F — — SECTION G H. —

— QUARTER FULL SIZE. —

STANDARD RAILWAY EQUIPMENT – PERMANENT WAY.

Nº 12A.

F UNDERCUT SWITCHES.

95 R. B. S. RAIL.

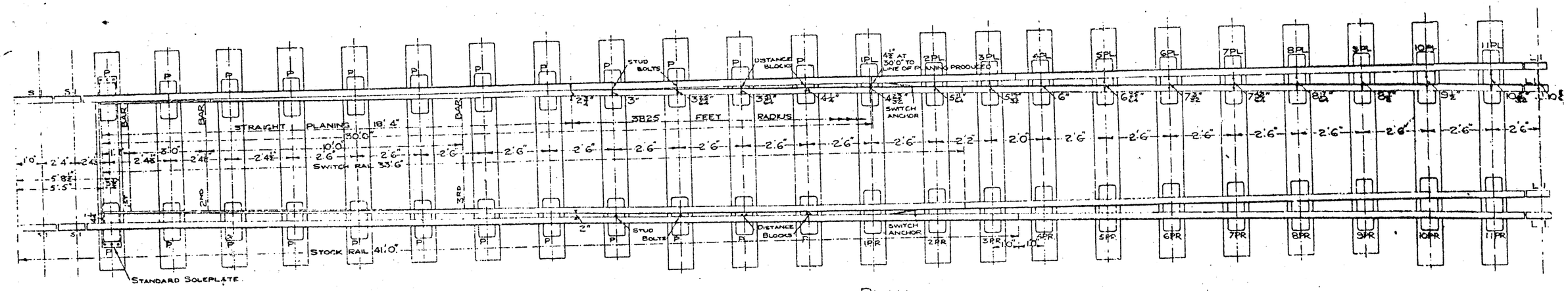

PLAN.

SCALE - 1/4 INCH = 1 FOOT.

NOTES.

FOR DETAILS OF CHAIRS SEE DRAWING Nº 18 AND RIDER
" " OF STRETCHER BARS AND SOLEPLATE SEE DRAWINGS Nºs 20 AND 22.
" " OF SWITCH ANCHOR, C.I. DISTANCE BLOCKS, STOCK RAIL AND STUD BOLTS, SEE DRAWING Nº 19
" OF S I CHAIR SEE DRAWING Nº 4
" OF L I CHAIR SEE DRAWING Nº 6

STOCK RAILS. 1" LETTER F TO BE STAMPED ON THE CENTRE OF THE WEB ON THE RUNNING SIDE 2' 2" FROM FISHJOINT END IN FRONT OF SWITCHES

DIMENSIONS OF C.I. DISTANCE BLOCKS AND STUDS.

STUD F1	2 7/32"	F1R	a = 3 21/32" b = 3 3/32"
STUD F2	2 21/32"	F2R	a = 3 13/32" b = 3 13/32"

STRETCHER BARS.

DIMENSION "A".	1ST = 3' 2 11/32"	2ND. 3' 2 3/4"	3RD. 3' 3 3/4"

NOTE.

WHERE TRACK CIRCUITING IS IN OPERATION SWITCH AND STOCK RAILS WILL REQUIRE TO BE LENGTHENED OR ALTERNATIVELY, CLOSURE RAILS USED

1" LETTER F TO BE STAMPED IN THE CENTRE OF THE WEB ON THE RUNNING SIDE OF THE SWITCH.

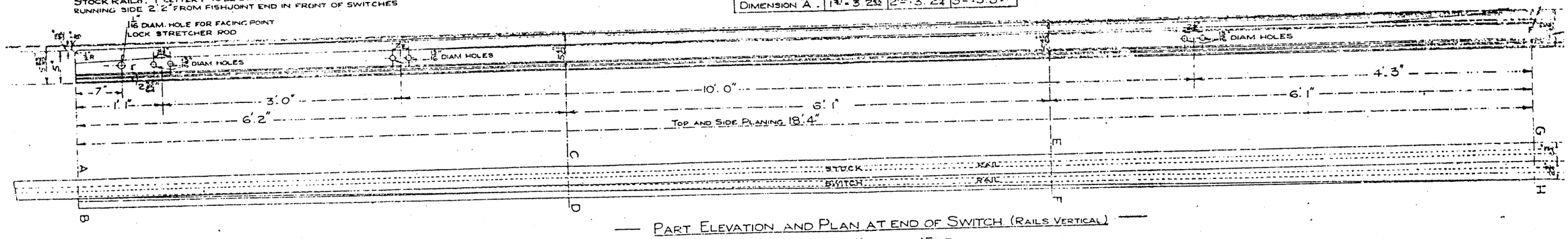

— PART ELEVATION AND PLAN AT END OF SWITCH (RAILS VERTICAL) —

SCALE - 1/4 INCHES = 1 FOOT.

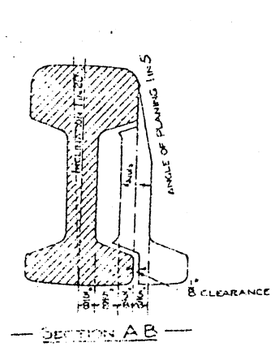

— SECTION A B —

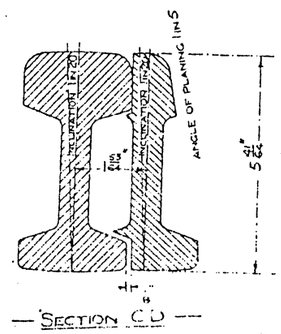

— SECTION C D —

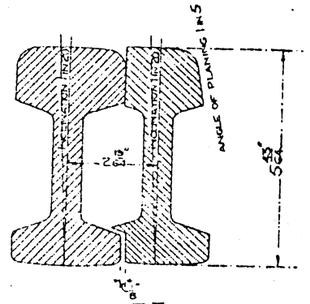

— SECTION E F —

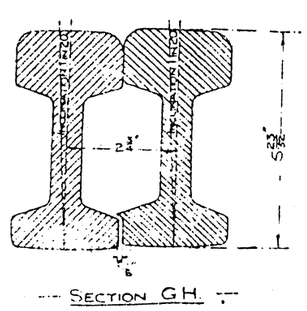

— SECTION G H. —

— QUARTER FULL SIZE —

STANDARD RAILWAY EQUIPMENT — PERMANENT WAY.

"A" STRAIGHTCUT SWITCHES.

95 R, B. S. RAIL.

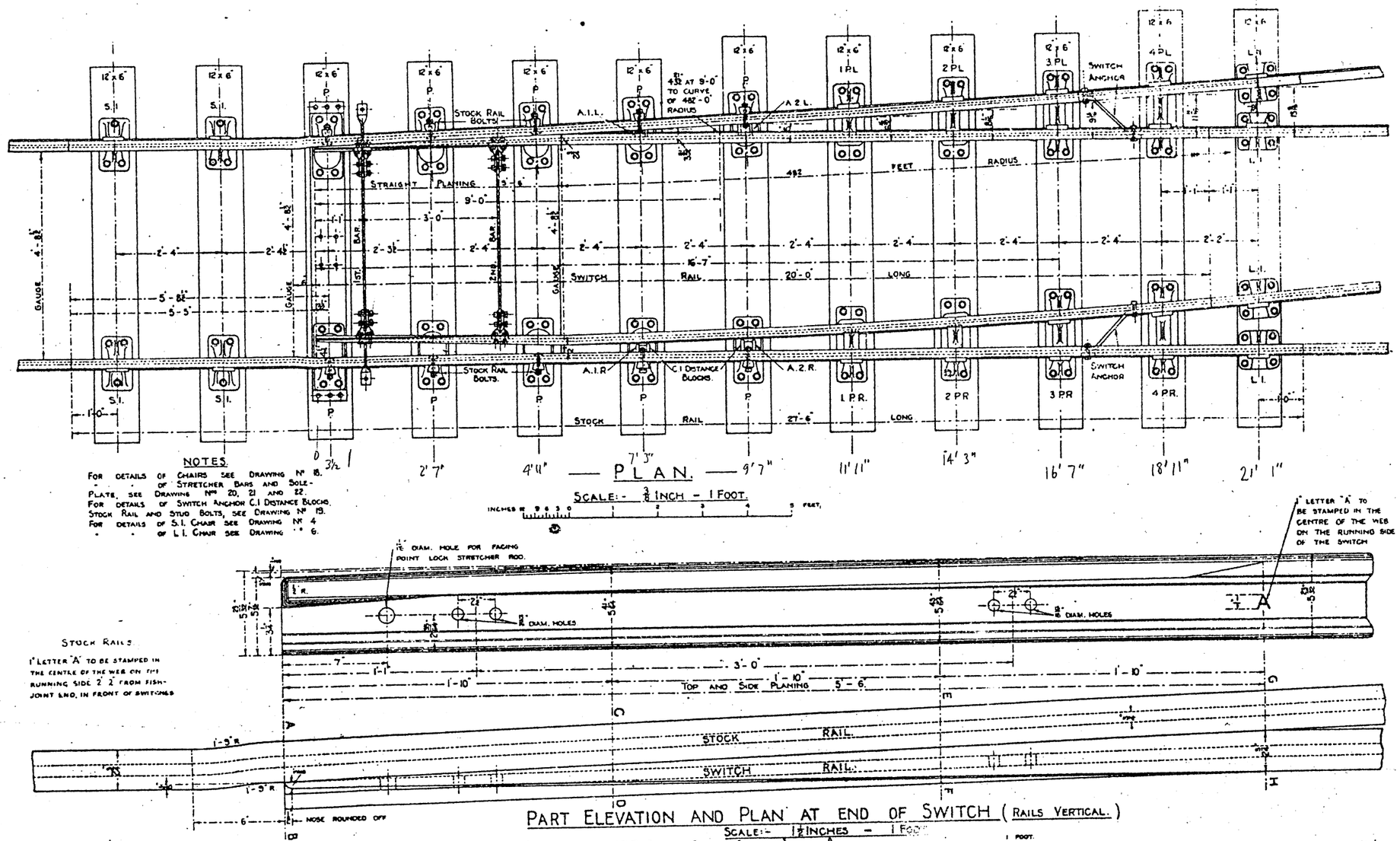

NOTES.

For details of chairs see Drawing No 18.
" " of Stretcher Bars and Sole-Plate, see Drawing Nos 20, 21 and 22.
For details of Switch Anchor, C.I Distance Blocks, Stock Rail and Stud Bolts, see Drawing No 19.
For details of S.I. Chair see Drawing No 4
" " of L.I. Chair see Drawing " 6.

PART ELEVATION AND PLAN AT END OF SWITCH (RAILS VERTICAL.)

SCALE:- 1½ INCHES - 1 FOOT.

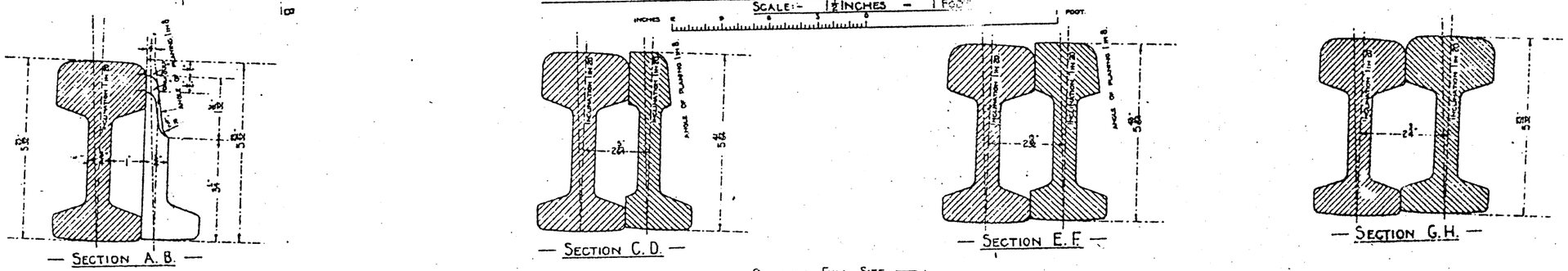

— SECTION A. B. — — SECTION C. D. — — SECTION E. F. — — SECTION G. H. —

— QUARTER FULL SIZE. —

STANDARD RAILWAY EQUIPMENT — PERMANENT WAY.

"B" STRAIGHTCUT SWITCHES.

95 R. B. S. RAIL.

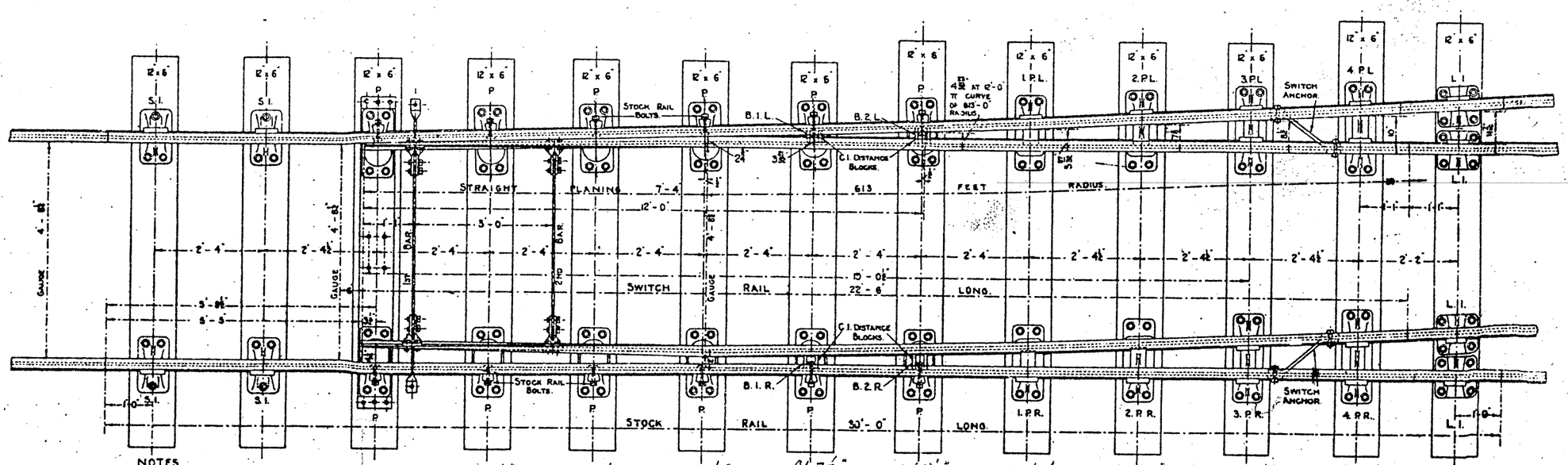

— PLAN. —

Scale:— ⅜ Inch = 1 Foot.

NOTES.

For Details of Chairs, see Drawing No. 18.
" " of Stretcher Bars and Sole Plate, see Drawing Nos. 20, 21, and 22.
For Details of Switch Anchor, C.I. Distance Blocks, Stock Rail and Stud Bolts, see Drawing No. 19.
For Details of S.I. Chair, see Drawing No. 4.
" " of L.I. Chair, see Drawing No. 6.

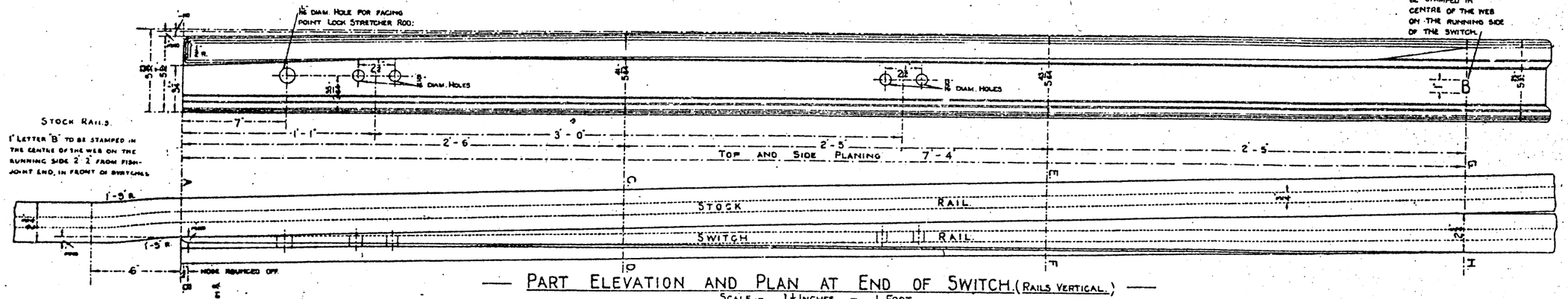

— Part Elevation and Plan at End of Switch. (Rails Vertical.) —

Scale:— 1½ Inches = 1 Foot.

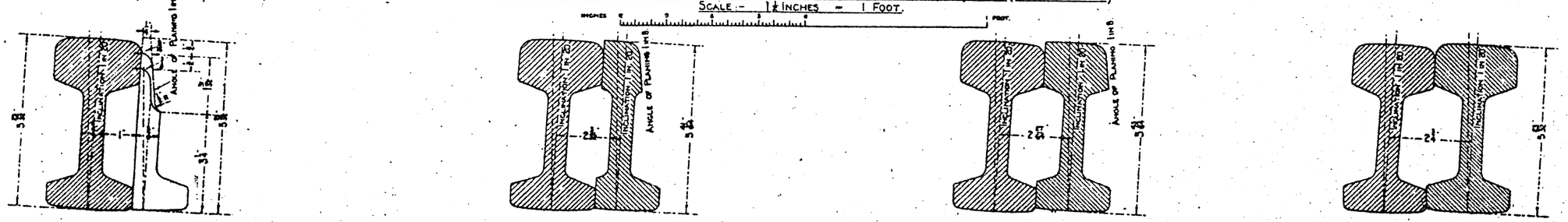

— Section A. B. — — Section C. D. — — Section E. F. — — Section G. H. —

— Quarter Full Size. —

STANDARD RAILWAY EQUIPMENT — PERMANENT WAY.

N° 13.

"C" STRAIGHTCUT SWITCHES.

95 R. B. S. RAIL.

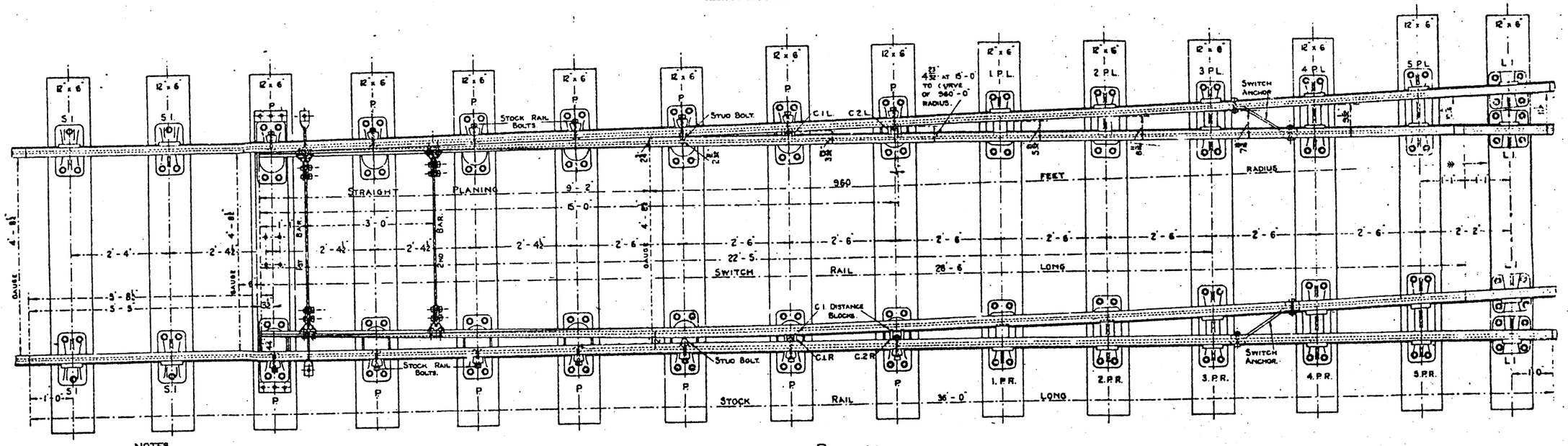

NOTES.

For Details of Chairs, see Drawing N° 18.
" " of Stretcher Bars and Sole Plate see Drawing Nos 20, 21 and 22.
For Details of Switch Anchor, C.I. Distance Blocks, Stock Rail and Stud Bolts, see Drawing N° 19.
For Details of S.I. Chair, see Drawing N° 4.
" " of L.I. Chair, see Drawing N° 6.

— PLAN. —

Scale:- ⅜ Inch = 1 Foot.

Letter "C" to be stamped in the centre of the web on the running side of the switch.

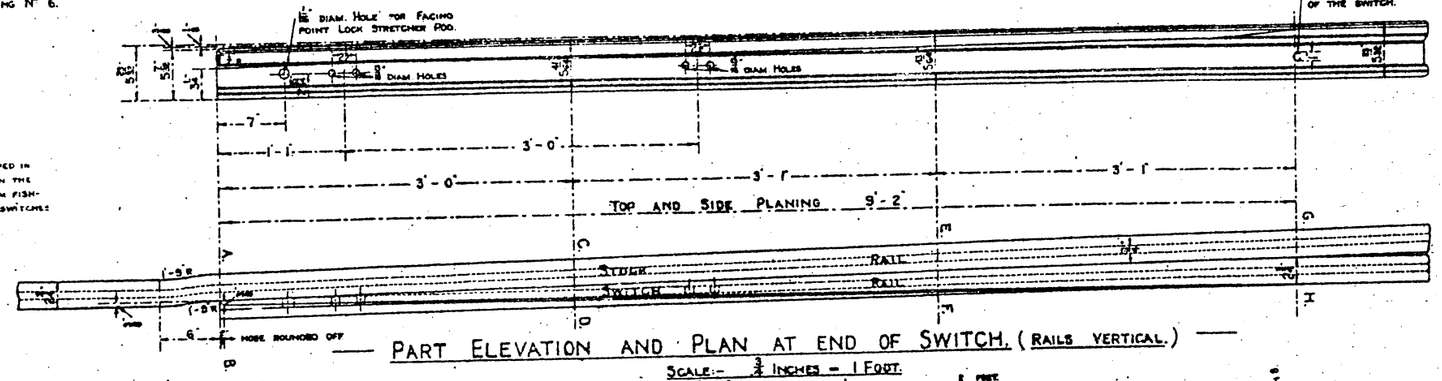

Stock Rails

1" Letter "C" to be stamped in the centre of the web on the running side 2'-2" from fish-joint end, in front of switches.

— PART ELEVATION AND PLAN AT END OF SWITCH. (Rails vertical.) —

Scale:- ⅜ Inches = 1 Foot.

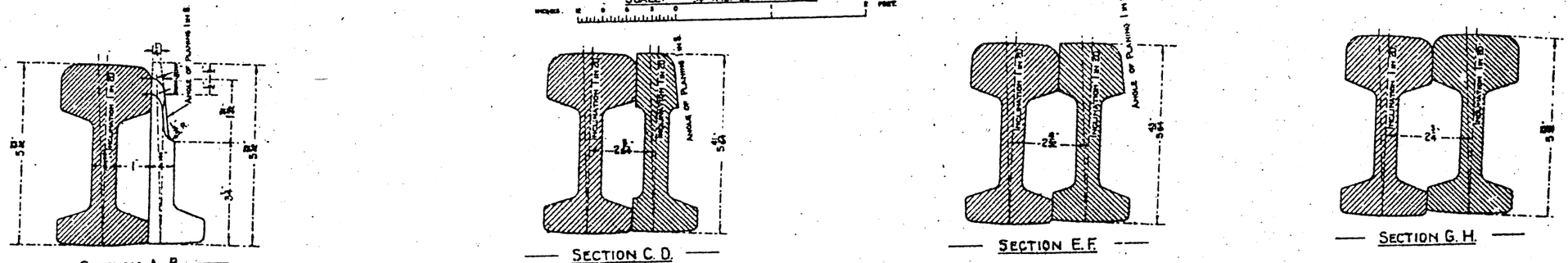

— Section A. B. — — Section C. D. — — Section E. F. — — Section G. H. —

— Quarter Full Size. —

STANDARD RAILWAY EQUIPMENT — PERMANENT WAY.

"D" STRAIGHTCUT SWITCHES.

95 R. B. S. RAIL.

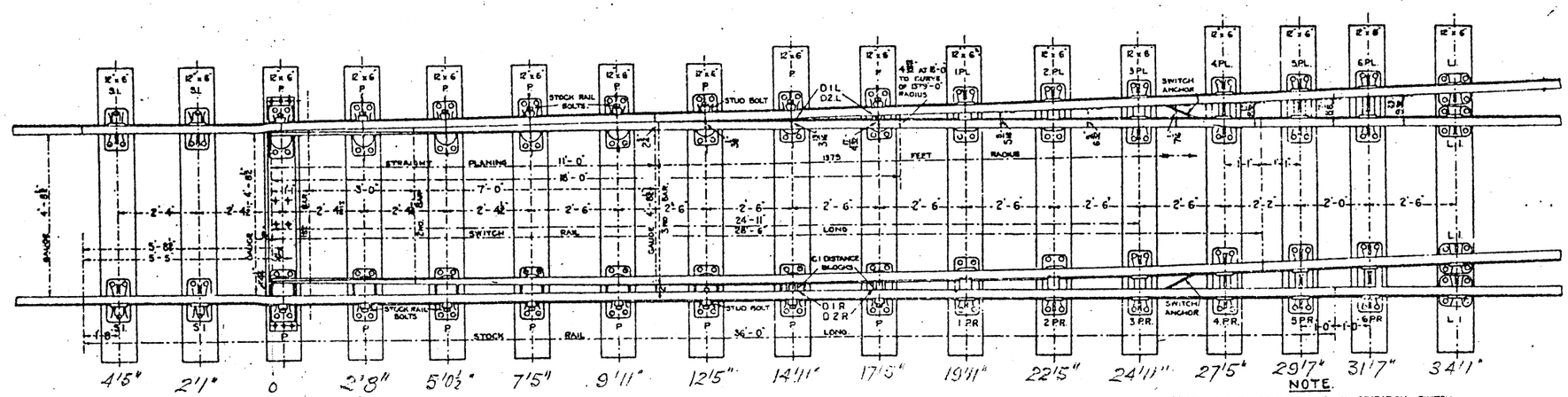

NOTE.

WHERE TRACK CIRCUITING IS IN OPERATION SWITCH AND STOCK RAILS WILL REQUIRE TO BE LENGTHENED OR, ALTERNATIVELY, CLOSURE RAILS USED

NOTES.

FOR DETAILS OF CHAIRS, SEE DRAWING Nº 18
" " OF STRETCHER BARS, AND
SOLE PLATE, SEE DRAWING Nºs 20, 21 AND 22.
FOR DETAILS OF SWITCH ANCHOR C.I. DISTANCE BLOCKS,
STOCK RAIL AND STUD BOLTS, SEE DRAWING Nº 19.
FOR DETAILS OF S.I. CHAIR SEE DRAWING Nº 4
" " OF L.I. CHAIR SEE DRAWING Nº 6.

— PLAN —

SCALE:— ¼ INCH = 1 FOOT.

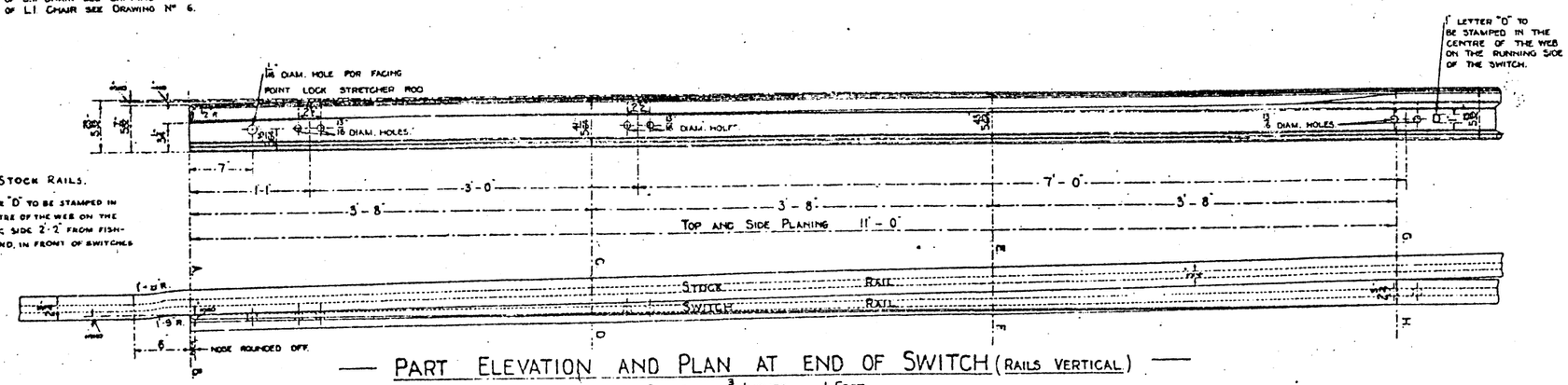

— PART ELEVATION AND PLAN AT END OF SWITCH (RAILS VERTICAL) —

SCALE:— ¾ INCHES = 1 FOOT.

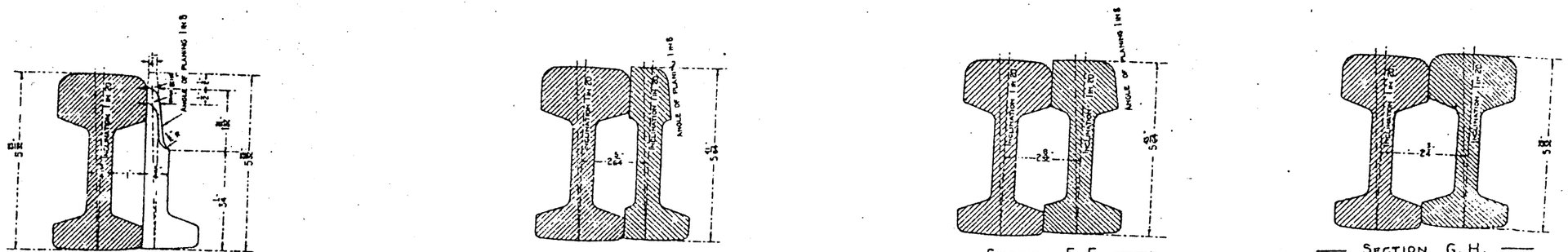

— QUARTER FULL SIZE —

STANDARD RAILWAY EQUIPMENT — PERMANENT WAY.

N° 17.

"E" STRAIGHTCUT SWITCHES.

95 R. B. S. RAIL.

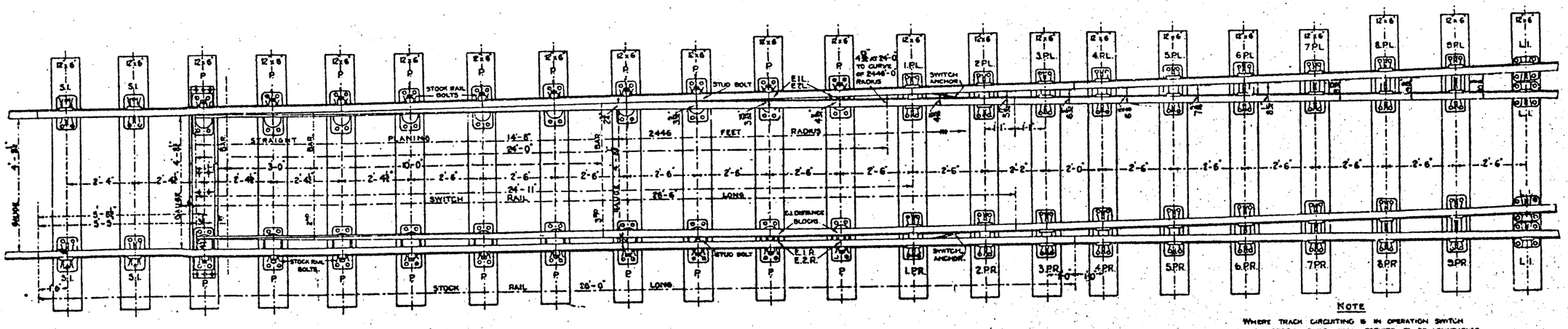

NOTES.

For details of Chairs see Drawing N° 18.
" " of Stretcher Bars and Sole Plate see Drawing N°s 20, 21, and 22
For details of Switch Anchor C.I. Distance Blocks Stock Rail and Stud Bolts, see Drawing N° 19.
For details of S.I. Chair see Drawing N° 4
" " of L.I. Chair see Drawing N° 6.

— PLAN. —

SCALE:- ¼ INCH = 1 FOOT.

NOTE

Where track circuiting is in operation switch and stock rails will require to be lengthened or, alternatively, closure rails used

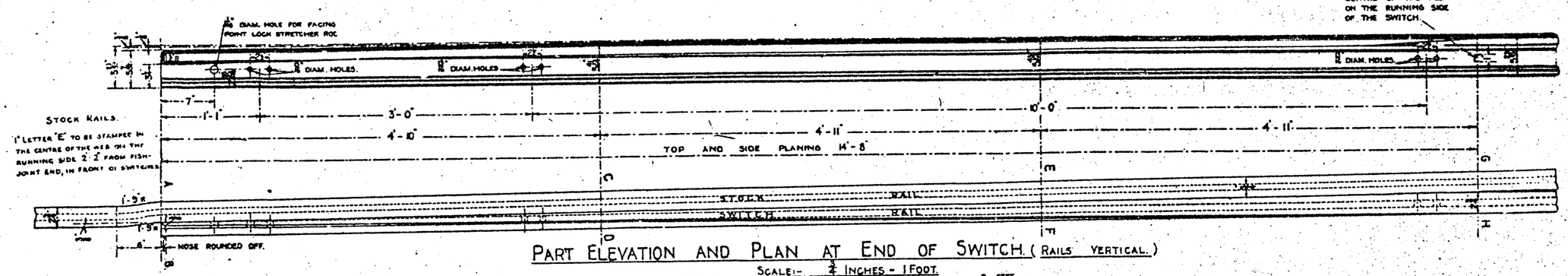

PART ELEVATION AND PLAN AT END OF SWITCH. (RAILS VERTICAL.)

SCALE:- ¾ INCHES = 1 FOOT.

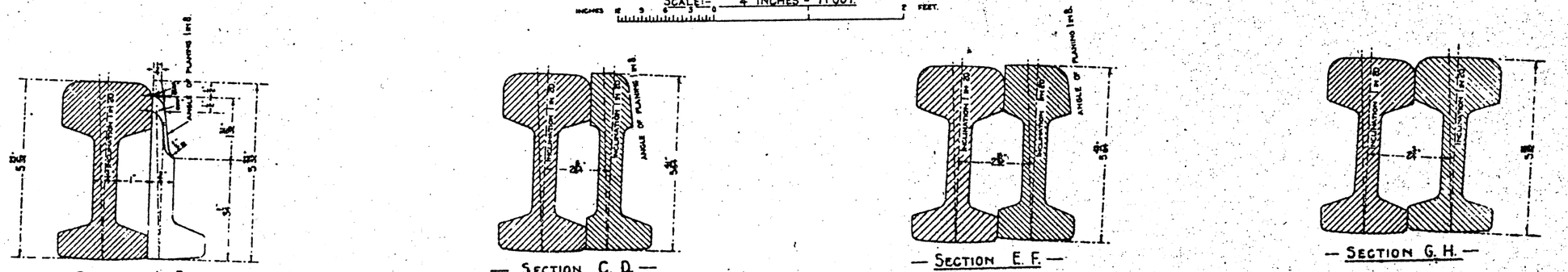

— SECTION A. B. — — SECTION C. D. — — SECTION E. F. — — SECTION G. H. —

— QUARTER FULL SIZE. —

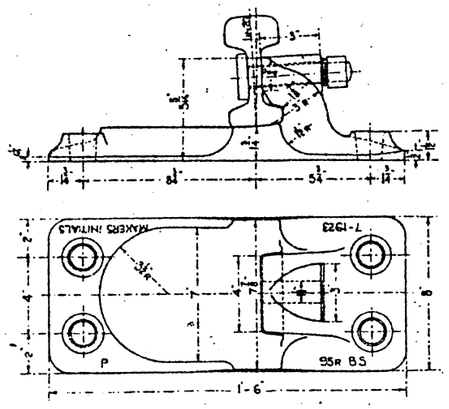

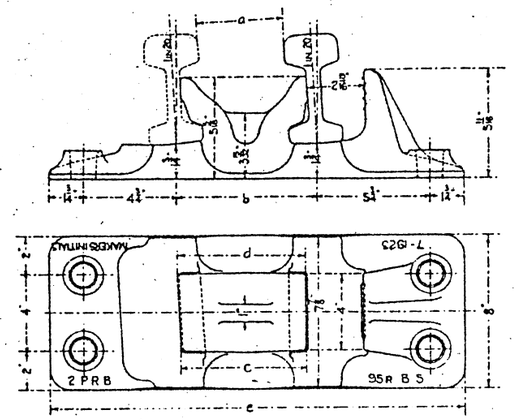

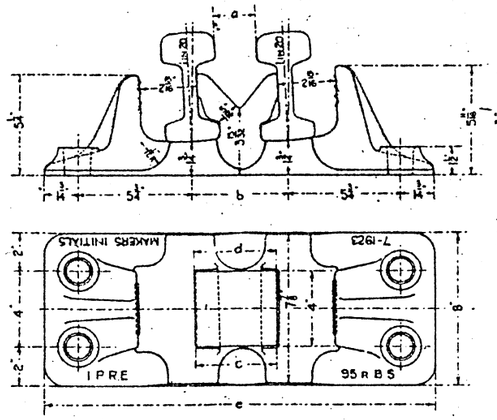

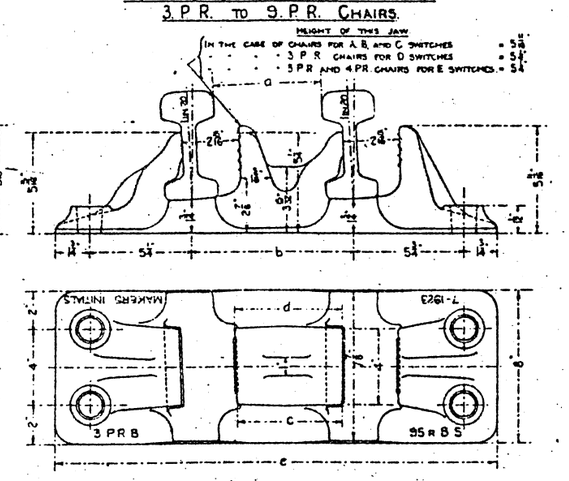

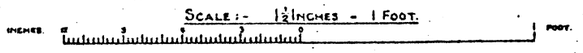

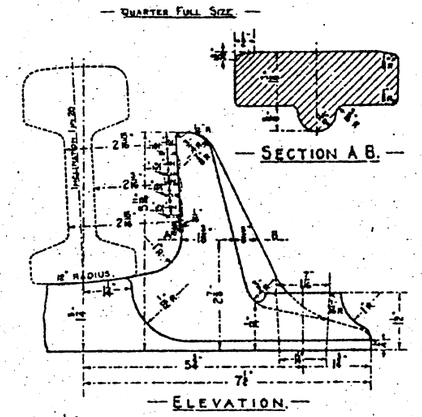

STANDARD RAILWAY EQUIPMENT – PERMANENT WAY.

Nº 18.

CHAIRS FOR SWITCHES.

95 R. B. S. RAIL.

P. CHAIR.

APPROX: WEIGHT = 60LB.

A, B, C, AND D SWITCHES.
1. P.R. AND 2. P.R. CHAIRS.

E SWITCHES.
1. P R AND 2. P.R. CHAIRS.

A, B, C, D, AND E SWITCHES.
3. P.R. TO 9. P.R. CHAIRS.

HEIGHT OF THIS JAW
IN THE CASE OF CHAIRS FOR A, B, AND C SWITCHES = 5 1/4"
" " " 3 P.R. CHAIRS FOR D SWITCHES = 5 1/4"
" " " 3 P.R. AND 4 P.R. CHAIRS FOR E SWITCHES = 5 1/4"

— ELEVATION AND PLAN OF CHAIRS. —

SCALE:- 1 1/2 INCHES = 1 FOOT.

INCHES 0 3 6 9 1 FOOT.

NOTES.

THIS DRAWING IN CONJUNCTION WITH THE DIMENSIONAL TABLES AND ALSO THE NOTES FOLLOWING FURNISH ALL INFORMATION REQUISITE FOR THE MANUFACTURE OF SPECIAL CHAIRS REQUIRED FOR STANDARD SWITCHES "A." "B." "C." "D." AND "E."

THE RAIL JAWS OF ALL SWITCH CHAIRS OTHER THAN THE "P" CHAIRS TO CONFORM TO THE PROFILE OF THE RAIL JAW OF THE S.I. CHAIR (DRAWING Nº 4) SUBJECT, HOWEVER, TO THE ESSENTIAL DIFFERENCE IN THE HORIZONTAL INCLINATION NECESSITATED BY THE ANGLE OF THE SWITCH OR STOCK RAILS.

THE DETAILS OF THE KEY JAW ARE SHEWN ON THIS DRAWING, AND THIS DRAWING IS TYPICAL OF THE KEY JAWS FOR ALL SWITCH CHAIRS, SUBJECT TO THE ESSENTIAL DIFFERENCE IN THE HORIZONTAL INCLINATION NECESSITATED BY THE ANGLE OF THE SWITCH, AND SUBJECT ALSO TO THE HEIGHT BEING 5 1/4" INSTEAD OF 5 11/16" IN THE CASE OF THE SWITCH JAWS OF THE 1. P R. AND 2 P.R. CHAIRS ("E" SWITCHES ONLY.)

THE HORIZONTAL DIMENSIONS APPEARING ON THE ELEVATION DRAWINGS APPLY IN EVERY CASE TO THE CENTRE OF THE CHAIR.

SWITCH AND STOCK RAILS TO BE CANTED TOWARDS THE RUNNING SIDE AT AN INCLINATION OF 1 IN 20 FROM THE VERTICAL.

THE HOLES IN THE CHAIR BASES TO TAKE THE STANDARD FERRULE AND SCREW

THE LETTER A B C D, OR E, TO BE CAST ON EACH SPECIAL PR. OR PL CHAIR TO INDICATE FOR WHICH LENGTH OF SWITCHES A, B, C, D OR E IT HAS BEEN DESIGNED. THE DATE OF MANUFACTURE, MAKERS INITIALS AND WEIGHT OF RAIL DESIGNED FOR, IS ALSO TO BE CAST ON EACH CHAIR

DIMENSIONS OF 1. P.R. AND 2. P.R. CHAIRS.

SWITCH	CHAIR	a	b	c	d	e	APPROX. WEIGHT
A	1 P. R. A.	3 23/32"	6 5/32"	5 1/8"	5 27/32"	1'-8 15/32"	78 LB.
	2 P. R. A.	5 1/16"	8 1/16"	7 7/32"	7 7/16"	1'-10 1/16"	83 LB.
B	1 P. R. B	3 3/32"	5 27/32"	5"	5 3/16"	1'-7 27/32"	76 LB.
	2. P. R. B.	4 1/8"	7 1/8"	6 9/32"	6 15/32"	1'-9 1/8"	80 LB.
C	1 P. R. C.	2 29/32"	5 21/32"	4 27/32"	4 31/32"	1'-7 21/32"	75 LB.
	2. P. R. C.	3 5/16"	6 11/16"	5 7/8"	6 1/32"	1'-8 11/16"	78 LB.
D	1. P. R. D.	2 9/16"	5 5/16"	4 17/32"	4 5/8"	1'-7 5/16"	74 LB.
	2. P. R. D.	3 13/32"	6 9/32"	5 5/8"	5 21/32"	1'-8 5/32"	77 LB.
E	1. P. R. E.	2 3/16"	4 13/16"	4 5/32"	4 7/32"	1'-7 5/16"	72 LB.
	2. P. R. E.	2 13/32"	5 17/32"	4 1/4"	4 13/16"	1'-8 17/32"	74 LB.

THE ABOVE DIMENSIONS APPLY ALSO TO THE CORRESPONDING P L CHAIRS.

DETAILS ON THIS DRAWING APPLY TO BOTH THE UNDERCUT AND STRAIGHTCUT SWITCHES.

DIMENSIONS OF 3. P.R. TO 9. P.R. CHAIRS.

SWITCH	CHAIR	a	b	c	d	e	APPROX WEIGHT
A	3. P. R. A.	7 1/16"	9 5/16"	6 3/4"	7"	2'-0 5/16"	91 LB.
	4. P. R. A.	8 5/16"	11 11/16"	8 5/8"	8 29/32"	2'-2 1/16"	97 LB.
B	3. P. R. B.	5 1/4"	8 1/2"	5 15/32"	5 11/16"	1'-11"	86 LB
	4. P. R. B.	7 1/4"	10"	6 3/32"	7 3/16"	2'-0 1/2"	90 LB.
C	3. P. R. C.	5 1/16"	7 9/16"	4 5/16"	4 5/8"	1'-10 5/16"	87 LB.
	4 P. R. C.	6 9/32"	9 1/32"	6"	6 3/16"	1'-11 17/32"	91 LB.
	5. P. R. C.	7 5/16"	10 1/16"	7 3/32"	7 15/32"	2'-0 9/16"	93 LB.
D	3. P. R. D	4 1/16"	7 1/16"	4 1/8"	4 1/16"	1'-9 9/16"	83 LB.
	4. P. R. D.	5 5/32"	8 5/32"	5 1/32"	5 1/32"	1'-10 17/32"	87 LB.
	5. P. R. D.	6 1/8"	8 7/8"	5 7/8"	6"	1'-11 1/8"	90 LB.
	6. P. R. D	6 15/32"	9 19/32"	6 15/32"	6 7/8"	2'-0 7/32"	91 LB.
E	3. P. R. E.	3 5/32"	6 5/32"	3 1/8"	3 1/4"	1'-8 15/32"	80 LB.
	4. P. R. E	3 7/8"	6 1/8"	3 21/32"	3 25/32"	1'-8 1/2"	82 LB.
	5. P. R. E.	4 9/16"	7 5/16"	4 11/32"	4 7/16"	1'-9 9/16"	85 LB.
	6. P. R. E.	5 9/32"	8 1/32"	5 1/16"	5 5/32"	1'-10 17/32"	87 LB.
	7. P. R. E.	6 1/32"	8 29/32"	5 5/16"	5 29/32"	1'-11 7/32"	90 LB.
	8. P. R. E.	6 13/16"	9 9/16"	6 9/32"	6 11/16"	2'-0 1/2"	91 LB.
	9. P. R. E.	7 5/8"	10 3/8"	7 13/32"	7 1/2"	2'-0 7/8"	94 LB.

THE ABOVE DIMENSIONS APPLY ALSO TO THE CORRESPONDING P.L. CHAIRS

DETAILS OF KEY JAW

— QUARTER FULL SIZE —

—PLAN.—

REVISED P CHAIR FOR SWITCHES.

95R, B. S. RAIL.

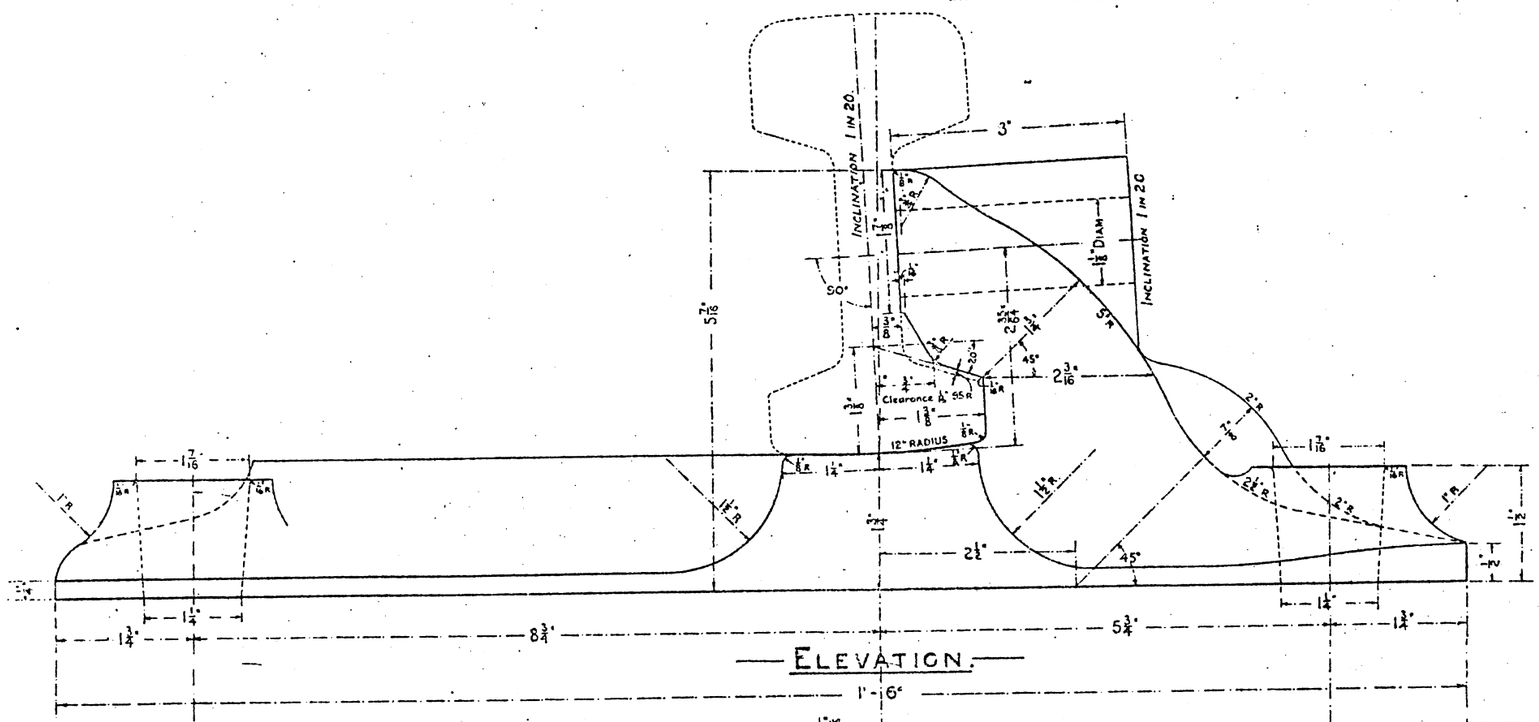

— ELEVATION. —

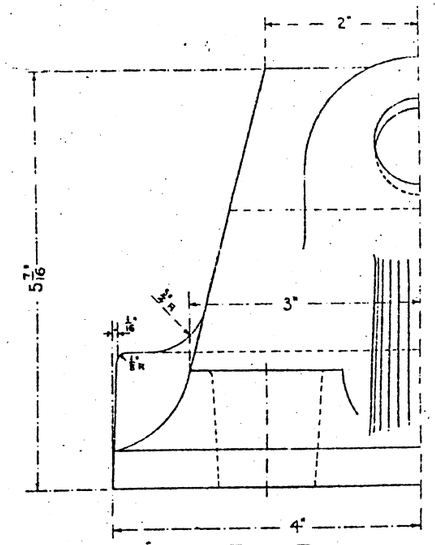

— HALF END ELEVATION. —

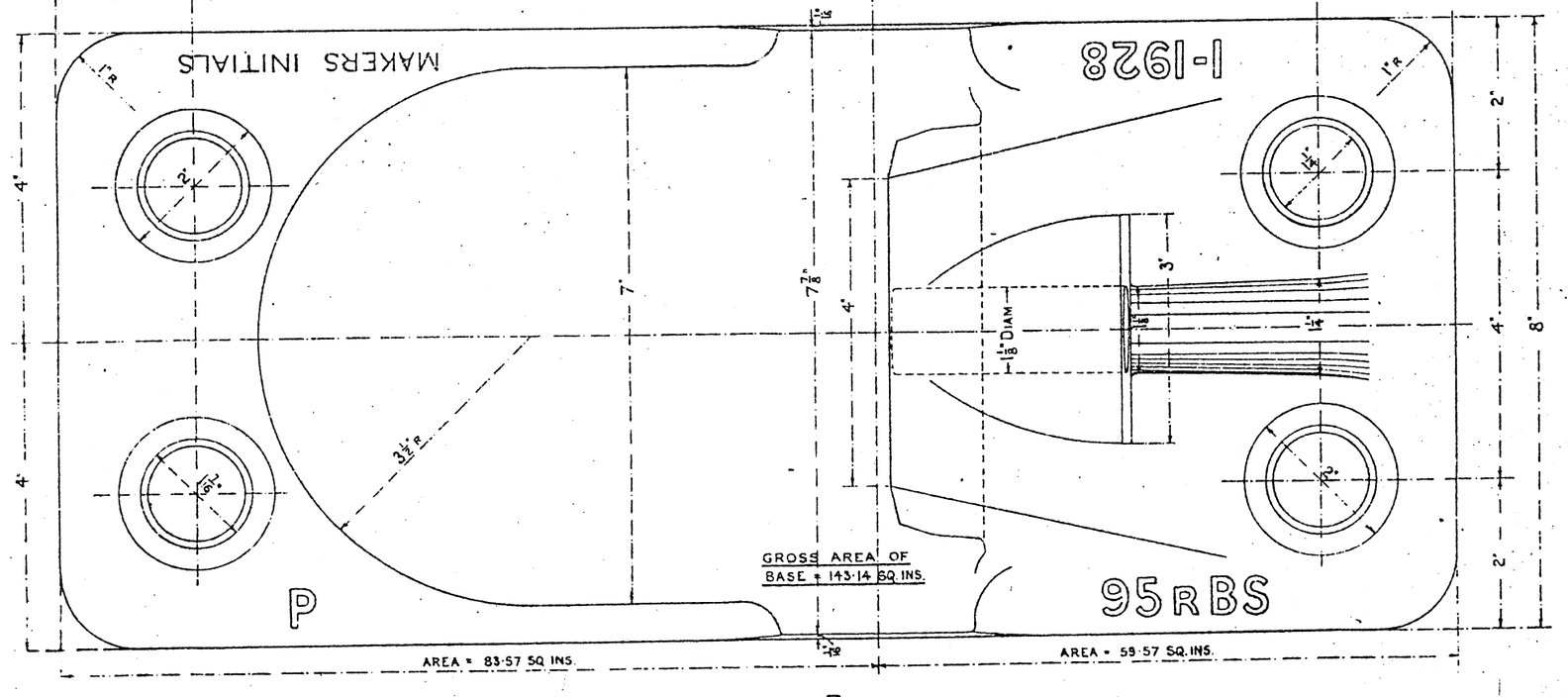

— PLAN. —

APPROX. WEIGHT, 63·LB.

NOTE.

This drawing supersedes the design of P Chair shewn on Drawing No 18. and this design of jaw to be used for all classes of "P" Chairs shewn on Drawings Nos 43A, 46 and 46A.

(For additional note in reg see Min No 551)

— HALF FULL SIZE. —

STANDARD RAILWAY EQUIPMENT — PERMANENT WAY.

DETAILS OF FITTINGS FOR SWITCHES.

95 R. B. S. RAIL.

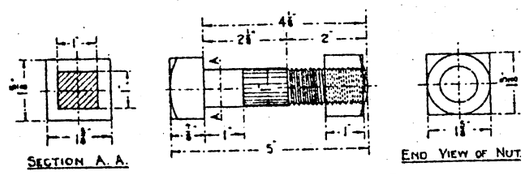

— DETAILS OF SWITCH ANCHOR BOLT —

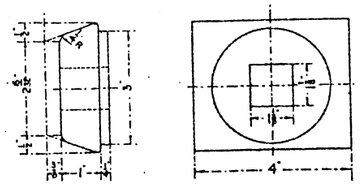

— C. I. WASHER. —

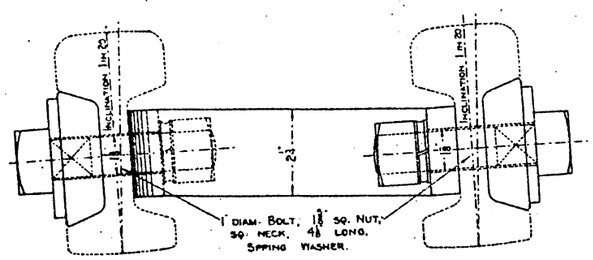

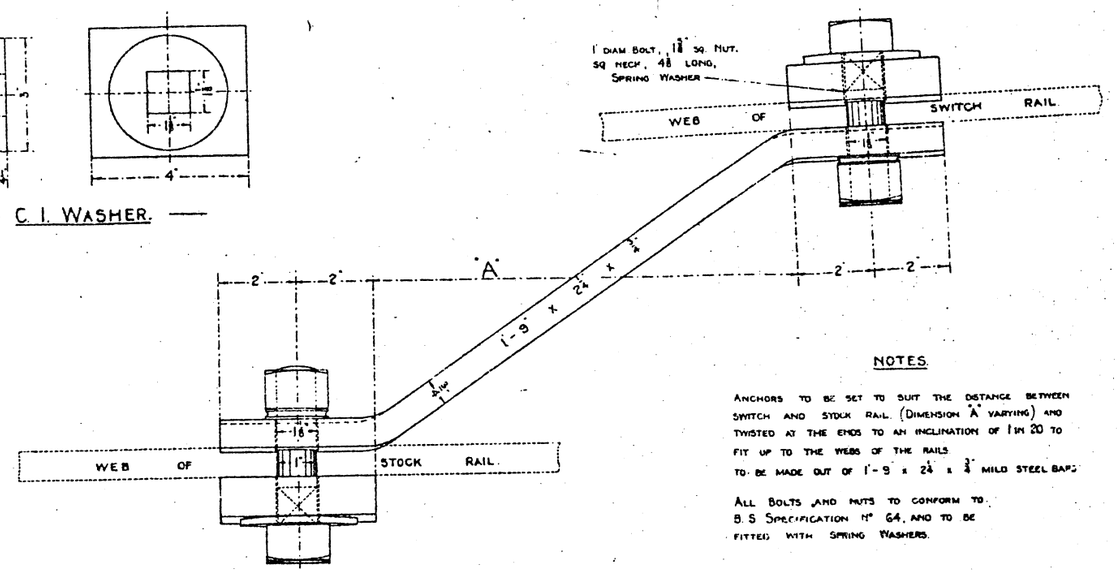

— SWITCH ANCHOR. (FOR FACING POINTS.) —

NOTES.

ANCHORS TO BE SET TO SUIT THE DISTANCE BETWEEN SWITCH AND STOCK RAIL. (DIMENSION "A" VARYING) AND TWISTED AT THE ENDS TO AN INCLINATION OF 1 IN 20 TO FIT UP TO THE WEBS OF THE RAILS.

TO BE MADE OUT OF 1'-9" x 2¼" x ¾" MILD STEEL BARS.

ALL BOLTS AND NUTS TO CONFORM TO B.S. SPECIFICATION No. 64, AND TO BE FITTED WITH SPRING WASHERS.

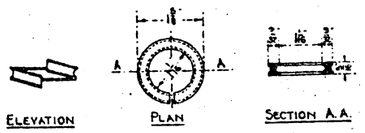

— DETAILS OF SPRING WASHER. —
(FOR 1" DIAM BOLT.)

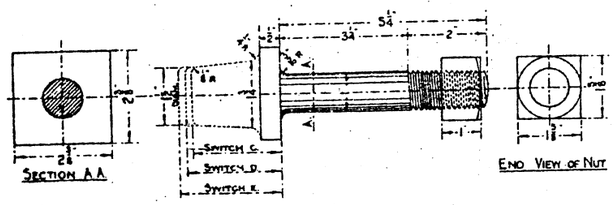

— DETAILS OF STOCK RAIL AND STUD BOLTS. —

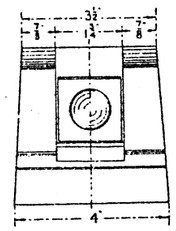

END ELEVATION.

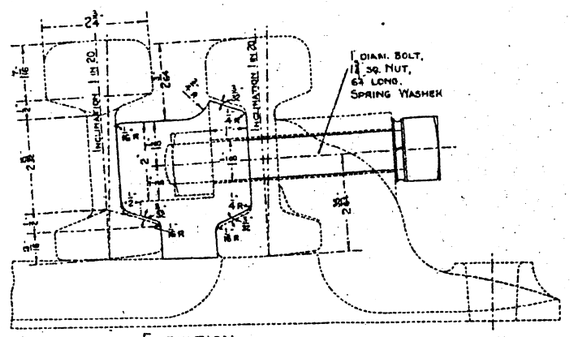

ELEVATION.

DIMENSIONS OF C. I. DISTANCE BLOCKS AND STUDS

SWITCH	BLOCK.	a	b
A	A. 1. R.	2 9/16"	3"
	A. 2. R.	4 5/32"	4 11/32"
B	B. 1. R.	2 27/32"	2 31/32"
	B. 2. R.	3 7/8"	4"
C	STUD.	2 7/32"	
	C. 1. R.	3"	3 3/32"
	C. 2. R.	3 7/8"	3 31/32"
D	STUD.	2 3/8"	
	D. 1. R.	3"	3 3/16"
	D. 2. R.	3 3/4"	3 15/16"
E	STUD.	2 17/32"	
	E. 1. R.	3"	3 1/16"
	E. 2. R.	3 9/16"	3 3/8"

THE ABOVE DIMENSIONS APPLY ALSO TO THE CORRESPONDING L DISTANCE BLOCKS AND STUDS.

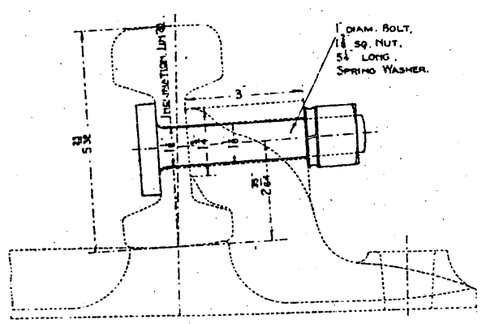

— STOCK RAIL BOLT. —

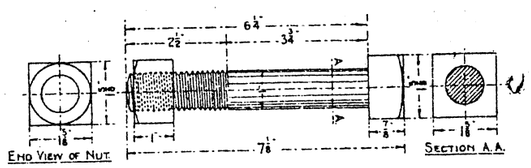

— DETAILS OF C.I. DISTANCE BLOCK BOLT. —

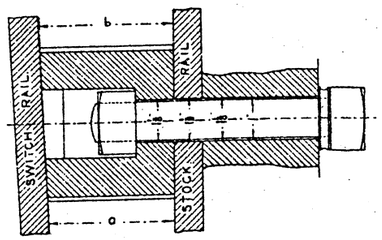

SECTIONAL PLAN.

— C.I. DISTANCE BLOCK. —

— QUARTER FULL SIZE. —

STANDARD RAILWAY EQUIPMENT — PERMANENT WAY.

Nº 20.

SWITCH STRETCHER BARS & SOLEPLATE.

FIRST BAR FOR UNDERCUT SWITCHES.

95 R, B.S. RAIL.

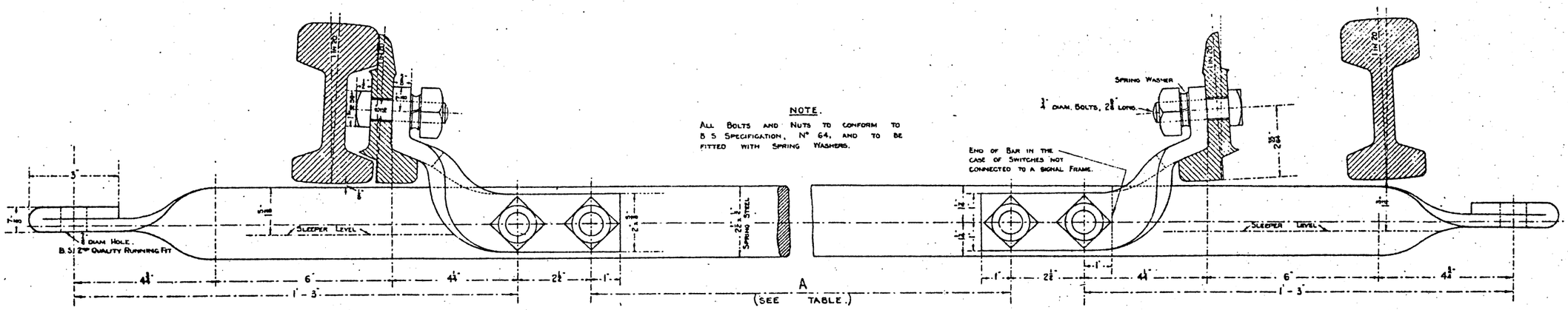

— ELEVATION —

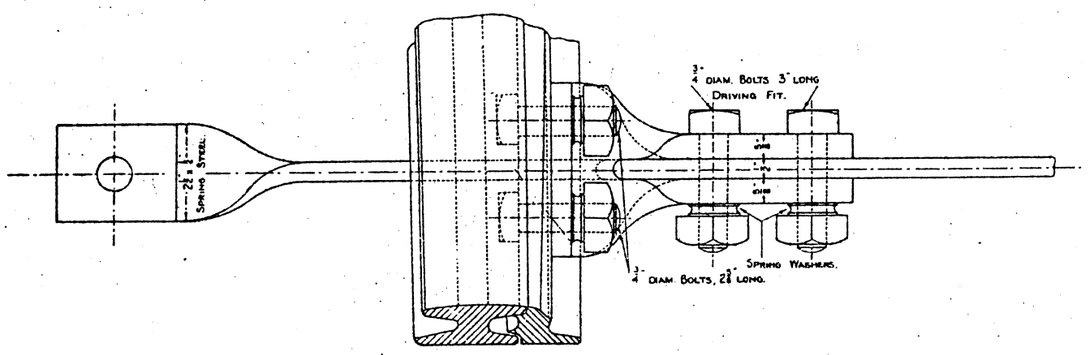

— PLAN —

FIRST STRETCHER BAR. FOR UNDERCUT SWITCHES. DIMENSION "A".	
	1ST BAR.
A SWITCHES.	3' - 2 11/16"
B SWITCHES.	3' - 2 9/16"
C SWITCHES.	3' - 2 11/32"
D SWITCHES.	3' - 2 13/32"
E SWITCHES.	3' - 2 9/32"

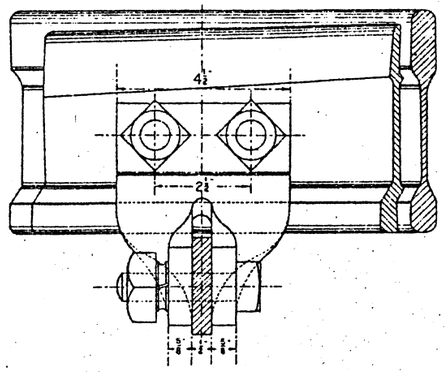

— END VIEW —

— QUARTER FULL SIZE —

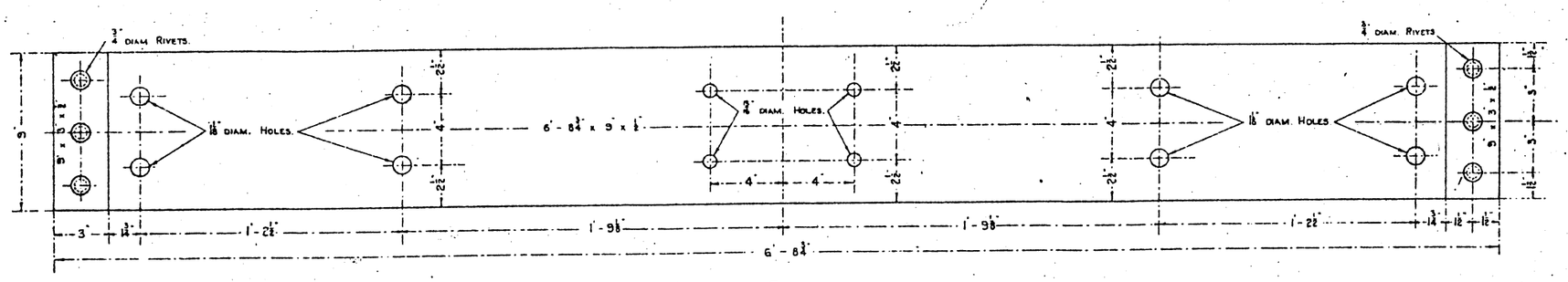

— STEEL SOLEPLATE —

SCALE :- 1 1/2 INCHES = 1 FOOT.

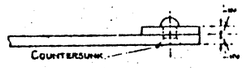

STANDARD RAILWAY EQUIPMENT — PERMANENT WAY.

SWITCH STRETCHER BARS & SOLEPLATE.

FIRST BAR FOR STRAICHTCUT SWITCHES.

95 R. B. S. RAIL.

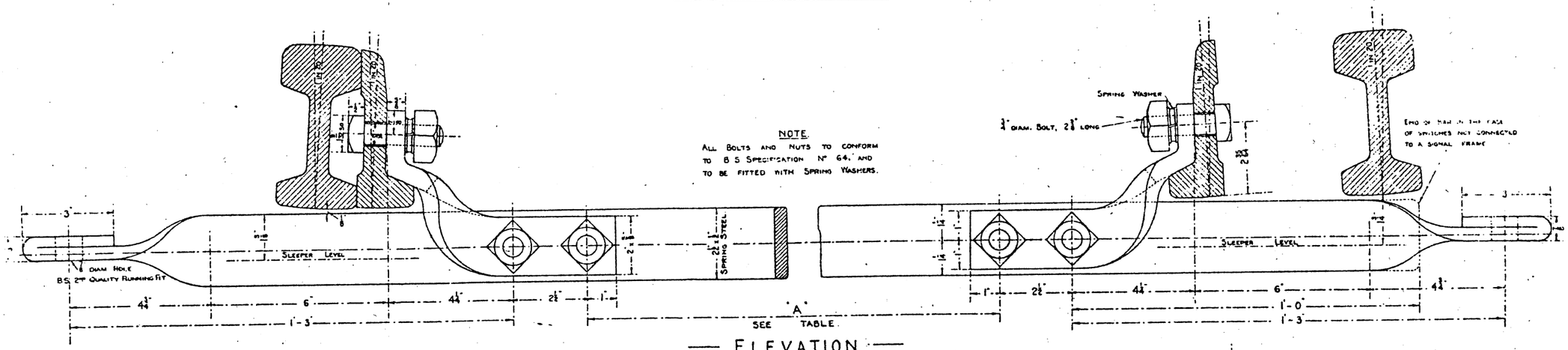

— ELEVATION. —

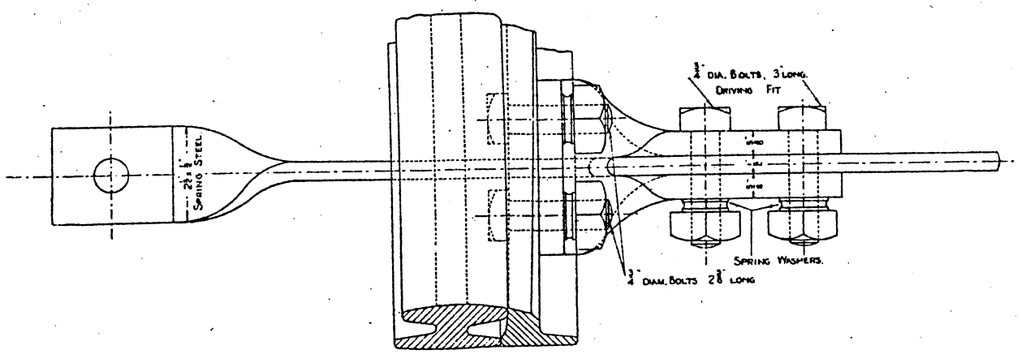

— PLAN. —

FIRST STRETCHER BAR. FOR STRAIGHTCUT SWITCHES. DIMENSION "A".	
	1ST BAR.
A SWITCHES	3' – 2 11/16"
B SWITCHES	3' – 2 9/16"
C SWITCHES	3' – 2 17/32"
D SWITCHES	3' – 2 15/32"
E SWITCHES.	3' – 2 13/32"

— QUARTER FULL SIZE. —

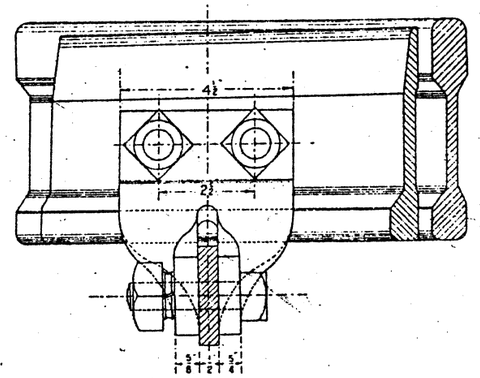

— END VIEW —

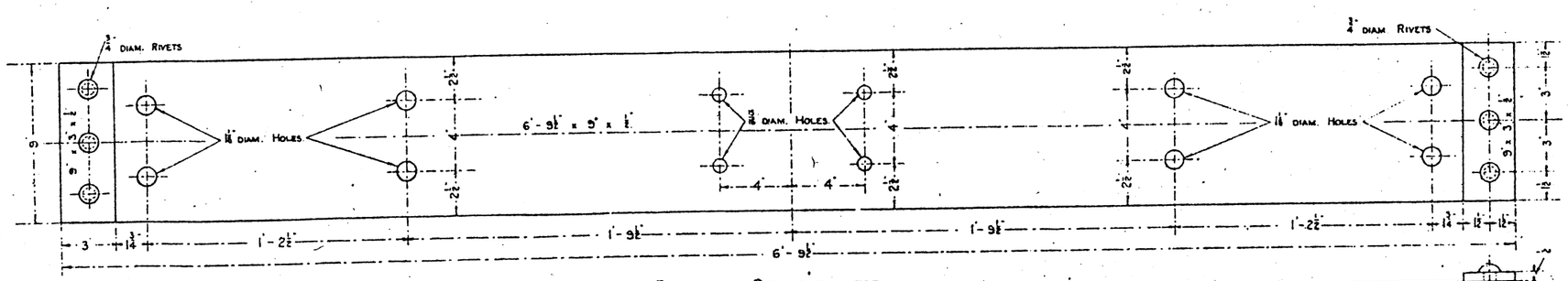

— STEEL SOLEPLATE. —

SCALE:- 1½ INCHES = 1 FOOT.

INCHES. 12 9 6 3 0 1 FOOT

STANDARD RAILWAY EQUIPMENT — PERMANENT WAY.

Nº 22.

SECOND & THIRD SWITCH STRETCHER BARS FOR UNDERCUT & STRAICHTCUT SWITCHES.

95 R. B. S. RAIL.

ELEVATION OF 2ND AND 3RD STRETCHER BARS FOR STRAIGHTCUT SWITCHES.

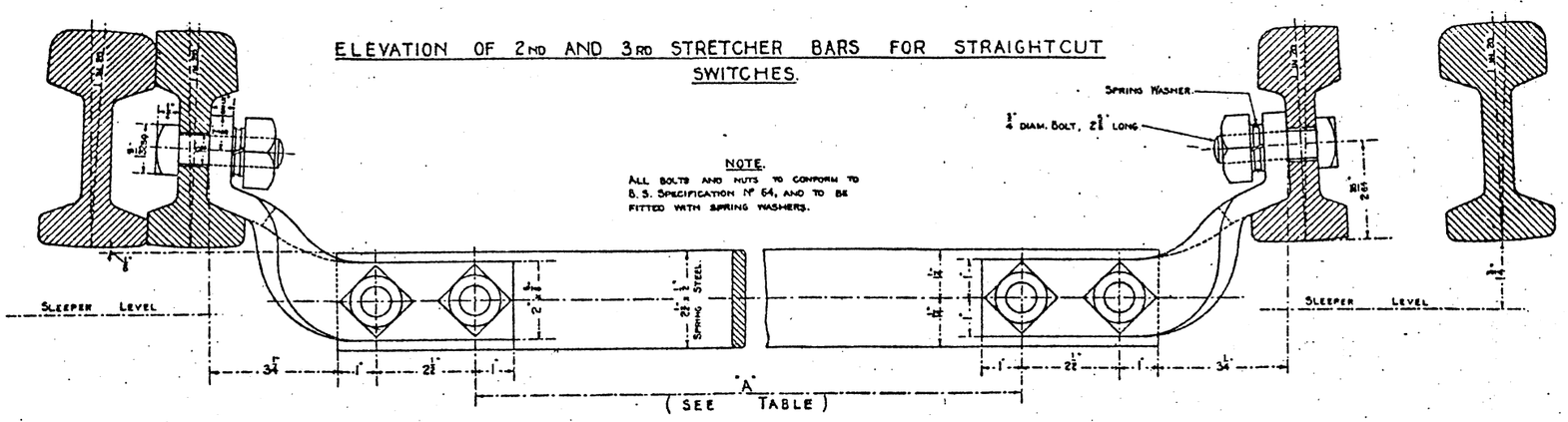

NOTE.
ALL BOLTS AND NUTS TO CONFORM TO B. S. SPECIFICATION Nº 64, AND TO BE FITTED WITH SPRING WASHERS.

ELEVATION OF 2ND AND 3RD STRETCHER BARS FOR UNDERCUT SWITCHES.

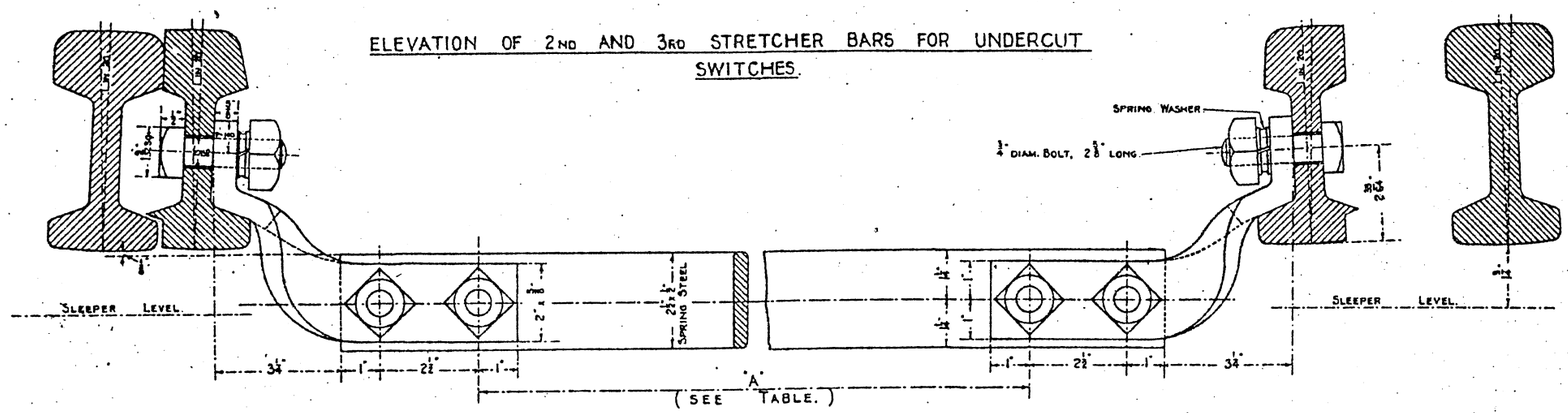

NOTE.
FOR FURTHER DETAILS OF BRACKETS AND BOLTS, SEE DRAWING Nº 20.

STRETCHER BARS FOR UNDERCUT AND STRAIGHTCUT SWITCHES		
DIMENSION "A".		
	2ND BAR.	3RD. BAR
A SWITCHES	3' - 3 15/16"	
B SWITCHES.	3' - 3 1/2"	
C SWITCHES.	3' - 3 1/4"	
D SWITCHES.	3' - 3 5/32"	3 - 4 1/2"
E SWITCHES.	3' - 2 7/8"	3 - 4 5/32"

— QUARTER FULL SIZE. —

STANDARD RAILWAY EQUIPMENT — PERMANENT WAY.

SWITCH STRETCHER BARS AND SOLEPLATE FOR 1 IN 8 DOUBLE SLIP ROADS.

FIRST BARS FOR UNDERCUT AND STRAICHTCUT SWITCHES.

95 R. B. S. RAIL.

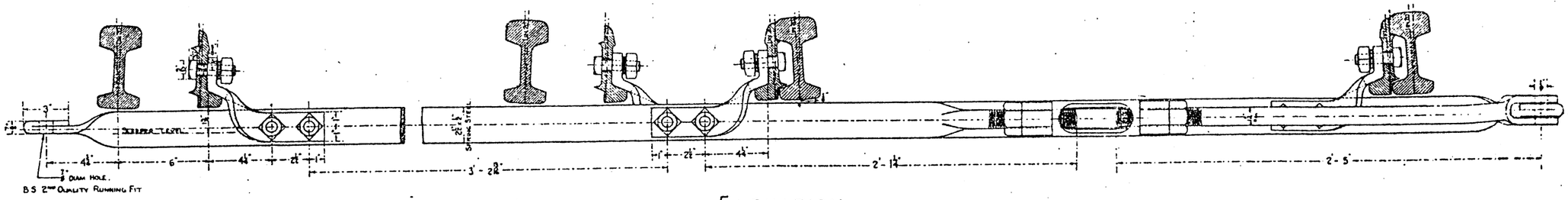

— ELEVATION. —

SCALE:- 1½ INCHES = 1 FOOT.

ALL BOLTS AND NUTS TO CONFORM TO B.S. SPECIFICATION No 64, AND TO BE FITTED WITH SPRING WASHERS

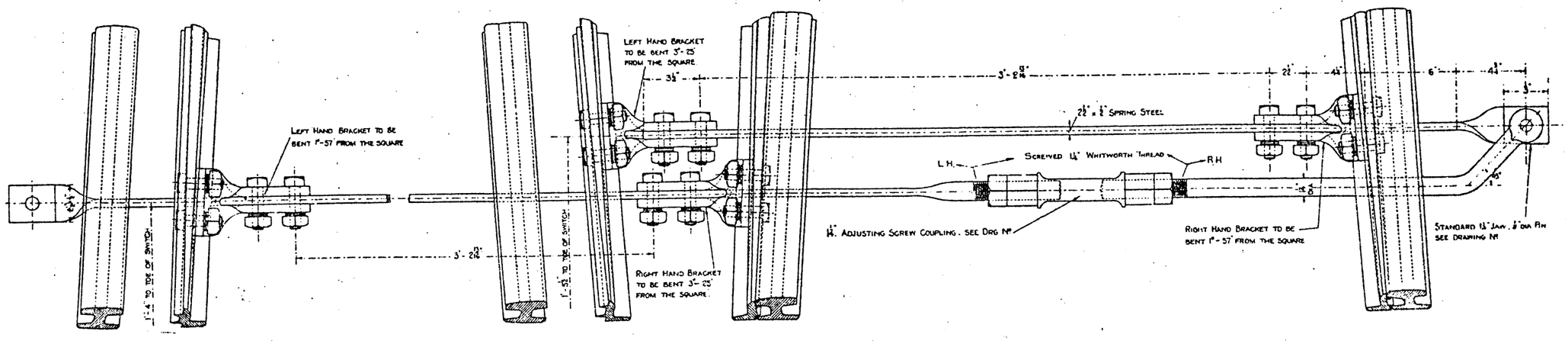

— PLAN. —

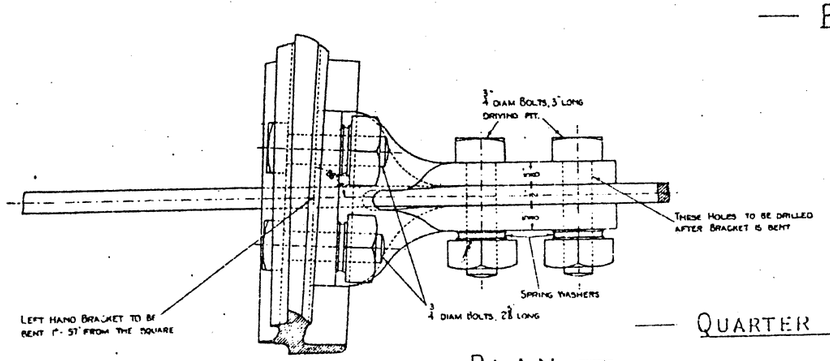

— QUARTER FULL SIZE. —

— PLAN. —

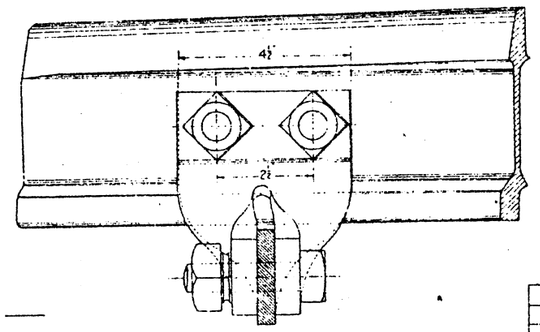

— END VIEW. —

STEEL SOLEPLATE.	
DIMENSION B =	UNDERCUT
DIMENSION C =	STRAIGHTCUT

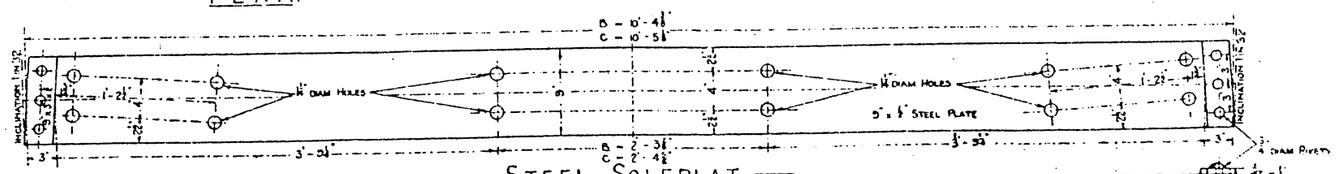

— STEEL SOLEPLAT —

SCALE:- ½ INCHES = 1 FOOT

STANDARD RAILWAY EQUIPMENT — PERMANENT WAY.

Nº 23A.

SOLEPLATES FOR 1 IN 7 AND 1 IN 8 OBTUSE ANGLE CROSSINGS WITH SINGLE SLIP ROADS.

85R, AND 95R, B. S. RAIL.

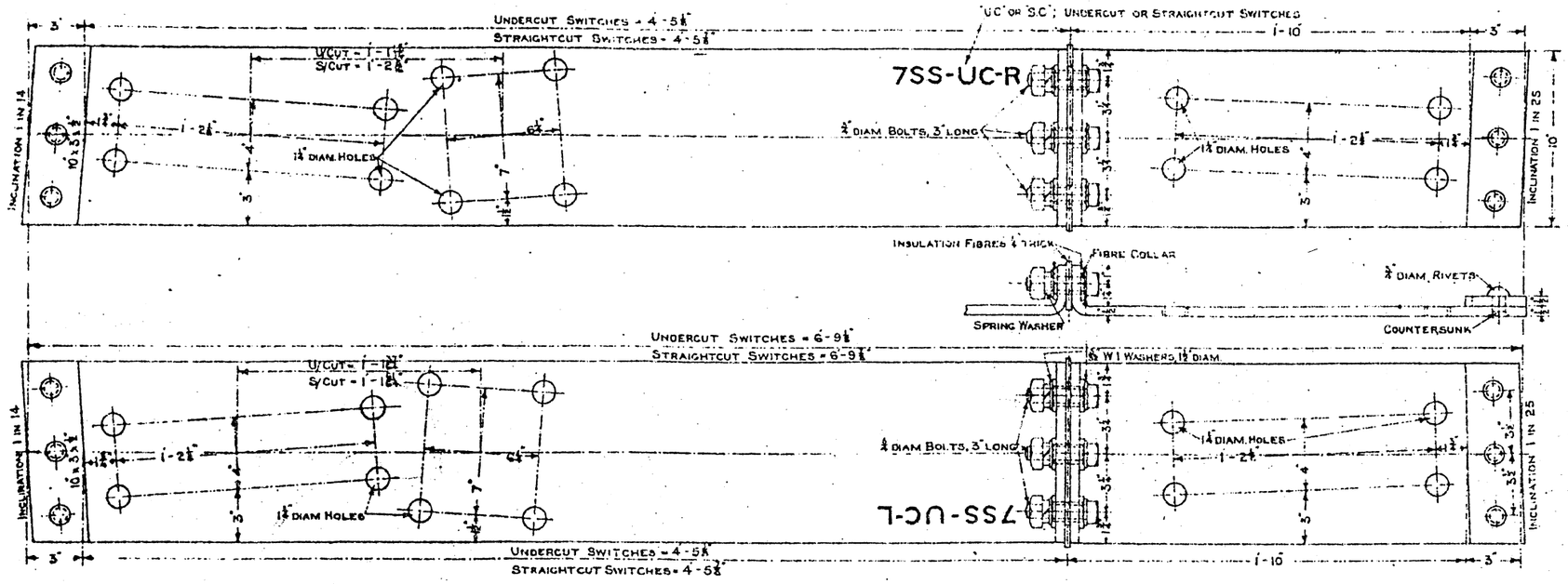

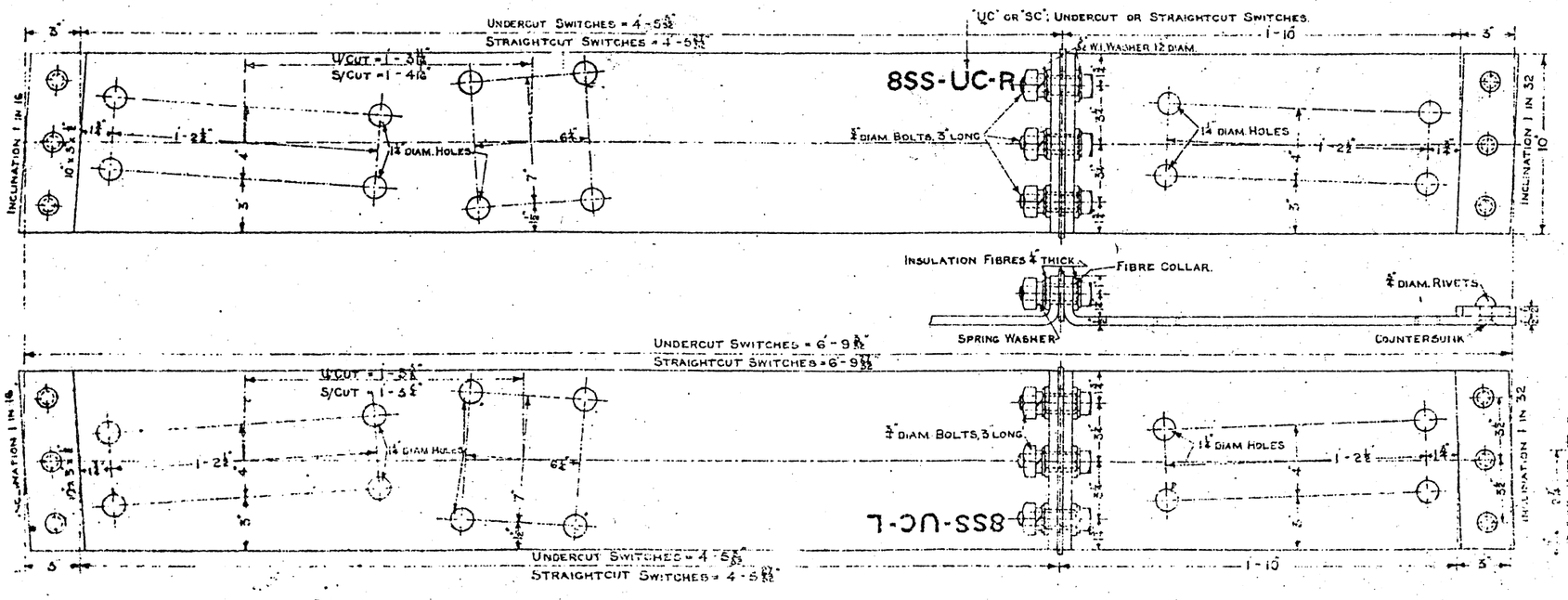

NOTES

ORDINARY (UNINSULATED) SOLEPLATES ARE SIMILAR IN ALL RESPECTS TO THOSE SHEWN EXCEPT THAT THE INSULATED JOINT WILL NOT BE REQUIRED.

FOR FURTHER DETAILS OF INSULATING FIBRE COLLAR ETC SEE DRAWING Nº 27.

THE STEEL FOR THE SOLEPLATES TO BE IN ACCORDANCE WITH THE B.S. SPECIFICATION Nº 15, REVISED.

ALL BOLTS AND NUTS TO CONFORM TO B.S. SPECIFICATION Nº 64 AND TO BE FITTED WITH SPRING WASHERS.

THE 1 1/4" DIAM. HOLES FOR THE POINT LOCK BOX TO BE DRILLED ON THE GROUND AS AND WHEN REQUIRED.

THE SOLEPLATES TO BE STAMPED AS INDICATED ON THE DRAWING IN 1" LETTERS AND FIGURES.

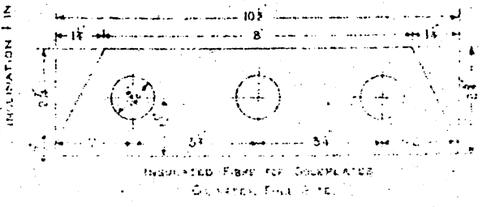

INSULATED FIBRE FOR SOLEPLATES

SCALE - 1 1/2 INCHES = 1 FOOT.

INCHES 12 9 6 3 0 1 FOOT

STANDARD RAILWAY EQUIPMENT — PERMANENT WAY.

Nº 23B

STRETCHER BARS FOR 1 IN 7, 7½ AND 8 OBTUSE ANGLE CROSSINGS WITH SINGLE AND DOUBLE SLIP ROADS.

95 R. B. S. AND 85 R. B. S. RAIL.

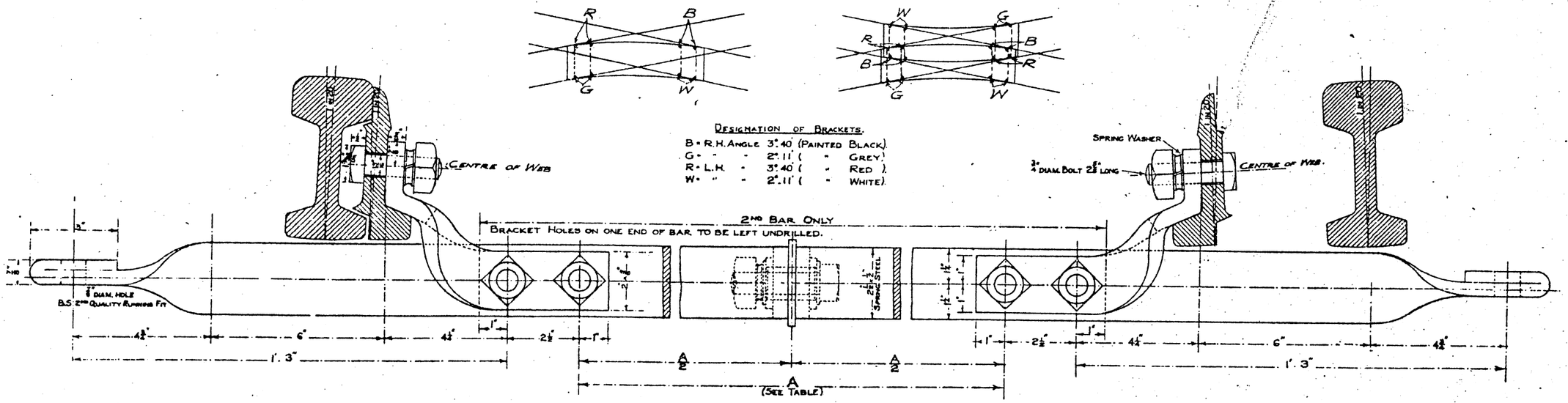

— Elevation —

Dimension "A".	
1st Bar Single Slips	2nd Bar Single & Double Slips.
3'. 2 5/16"	3'. 3 3/16"

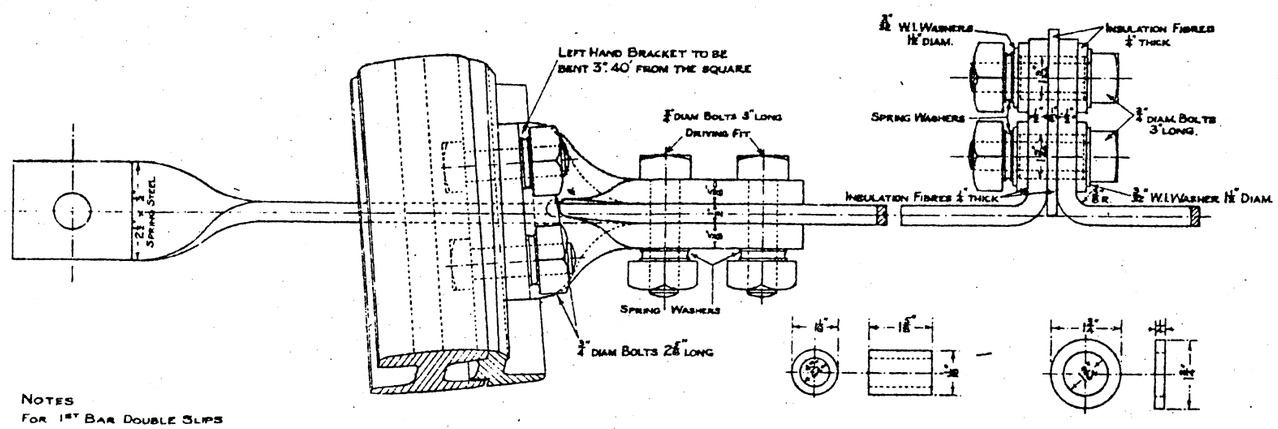

— Plan —

Insulation Fibres for Switch Stretcher Bar.

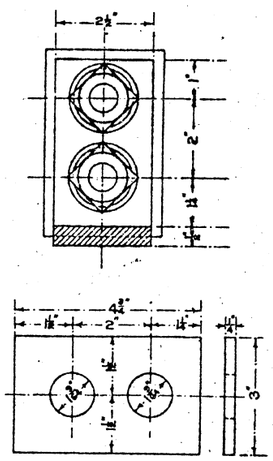

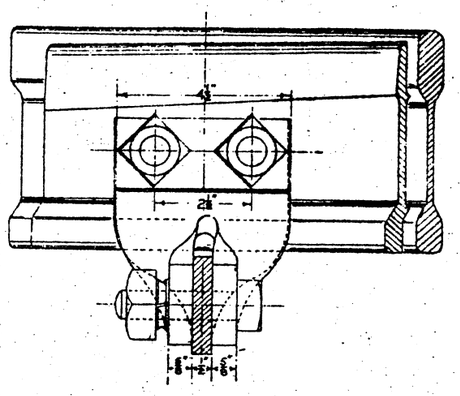

— End View —

— Quarter Full Size —

Notes

For 1st Bar Double Slips see Drawings Nos 23.27, 70 & 74.

All Bolts and Nuts to conform to B.S. Specification Nº 64, and to be fitted with Spring Washers.

Ordinary (Uninsulated) Stretcher Bars are similar in all respects to those shown except that the Insulated joint will not be required.

The Steel for the Stretcher Bar Brackets to be in accordance with B.S.S. Nº 15, Revised 1912. "A" Steel, and the Spring Steel for the Bars to conform to B.S.S. Nº 24, Part 3 Nº 6c.

STANDARD RAILWAY EQUIPMENT PERMANENT WAY

INSULATED SWITCH STRETCHER BAR & SOLEPLATE. FIRST BAR FOR STRAICHTCUT SWITCHES.

95 R. B. S. RAIL.

DIMENSION A.	
A SWITCHES.	3' - 2 3/4"
B SWITCHES	3' - 2 5/8"
C SWITCHES	3' - 2 5/16"
D SWITCHES	3' - 2 3/16"
E SWITCHES	3' - 2 1/16"

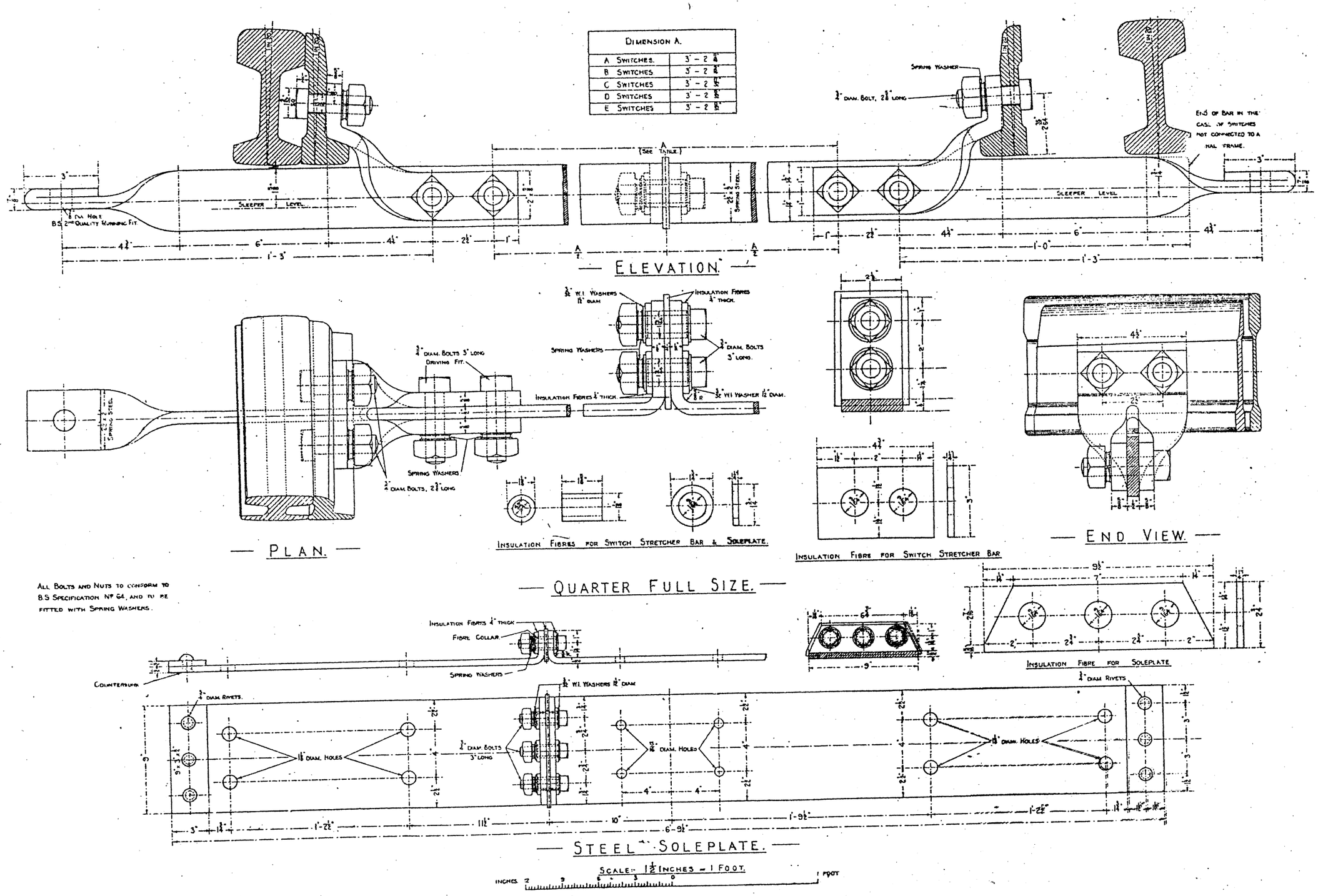

ALL BOLTS AND NUTS TO CONFORM TO B.S SPECIFICATION No 64, AND TO BE FITTED WITH SPRING WASHERS.

STANDARD RAILWAY EQUIPMENT — PERMANENT WAY.

SOLEPLATES FOR 1 IN 7 & 7½ OBTUSE ANGLE CROSSINGS WITH DOUBLE SLIP ROADS.

AND 1 IN 7½ OBTUSE ANGLE CROSSING WITH SINGLE SLIP ROAD.

85R, AND 95R, B. S. RAIL.

SOLEPLATES FOR 1 IN 7 AND 7½ DOUBLE SLIPS.

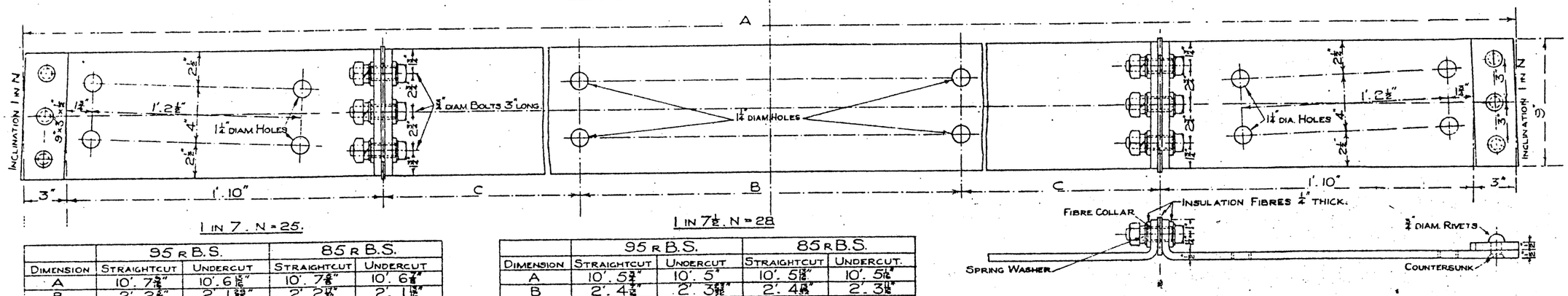

1 IN 7. N = 25.

	95 R B.S.		85 R B.S.	
DIMENSION	STRAIGHTCUT	UNDERCUT	STRAIGHTCUT	UNDERCUT
A	10'. 7 5/16"	10'. 6 15/16"	10'. 7 5/8"	10'. 6 7/8"
B	2'. 2 5/16"	2'. 1 29/32"	2'. 2 17/32"	2'. 1 13/16"
C	2'. 1 15/32"	2'. 1 13/32"	2'. 1 17/32"	2'. 1 3/32"

1 IN 7½. N = 28

	95 R B.S.		85 R B.S.	
DIMENSION	STRAIGHTCUT	UNDERCUT	STRAIGHTCUT	UNDERCUT.
A	10'. 5 3/4"	10'. 5"	10'. 5 13/16"	10'. 5 1/16"
B	2'. 4 1/32"	2'. 3 29/32"	2'. 4 5/32"	2'. 3 11/16"
C	1'. 11 31/32"	1'. 11 21/32"	1'. 11 11/16"	1'. 11 1/16"

SOLEPLATES FOR 1 IN 7½ SINGLE SLIP.

"UC" OR "SC" UNDERCUT OR STRAIGHTCUT SWITCHES.

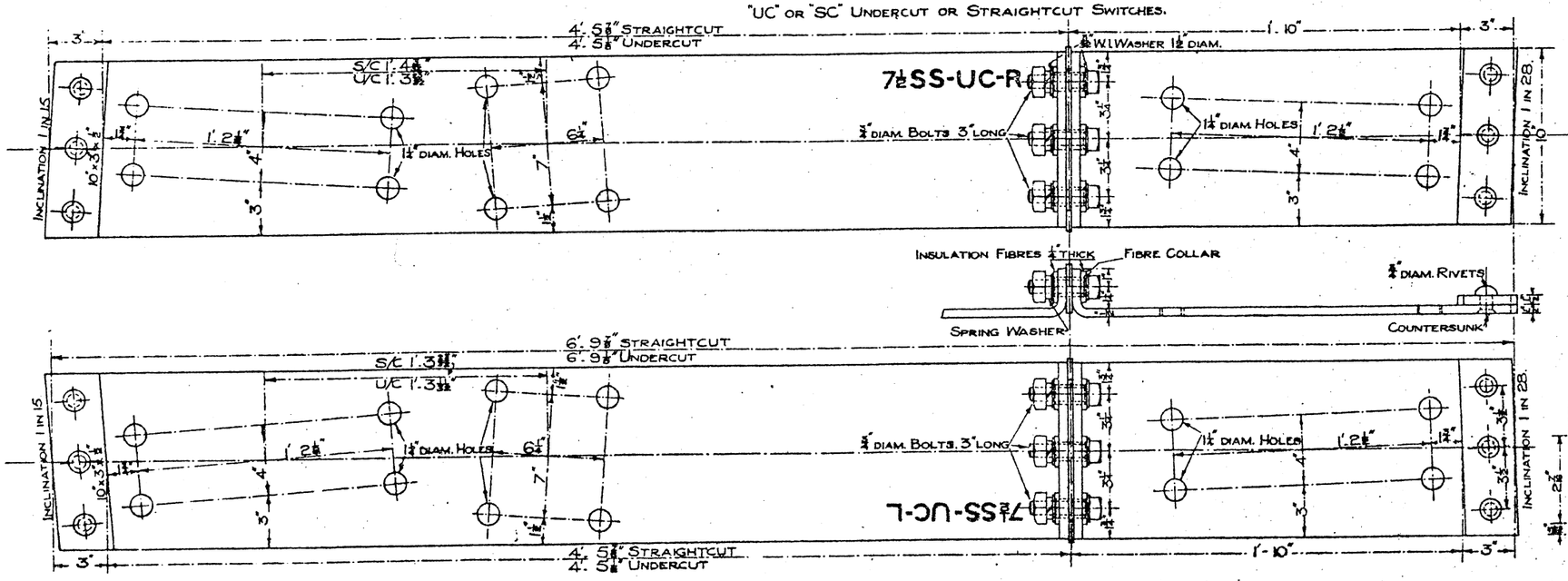

NOTES.

ORDINARY (UNINSULATED) SOLEPLATES ARE SIMILAR IN ALL RESPECTS TO THOSE SHEWN EXCEPT THAT THE INSULATED JOINT WILL NOT BE REQUIRED.

FOR FURTHER DETAILS OF INSULATING FIBRE COLLAR ETC., SEE DRAWING Nº 27.

THE STEEL FOR THE SOLEPLATES TO BE IN ACCORDANCE WITH THE B.S. SPECIFICATION Nº 15 REVISED

ALL BOLTS AND NUTS TO CONFORM TO B.S SPECIFICATION Nº 64 AND TO BE FITTED WITH SPRING WASHERS.

THE 1½" DIAM. HOLES FOR THE POINT LOCK BOX TO BE DRILLED ON THE GROUND AS AND WHEN REQUIRED.

THE SOLEPLATES TO BE STAMPED AS INDICATED ON THE DRAWING IN 1" LETTERS AND FIGURES.

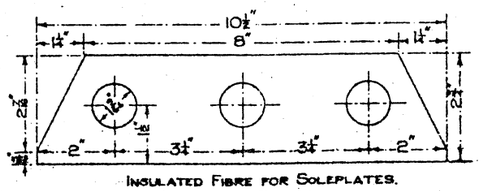

INSULATED FIBRE FOR SOLEPLATES.
HALF FULL SIZE.

SCALE:- 1½ INCHES = 1 FOOT.

INCHES 12 9 6 3 0 FOOT.

STANDARD RAILWAY EQUIPMENT — PERMANENT WAY. No. 24.

INSULATED SWITCH STRETCHER BAR & SOLEPLATE. FIRST BAR FOR UNDERCUT SWITCHES.

95 R. B. S. RAIL.

DIMENSION A.	
A SWITCHES.	3' - 2 3/4"
B SWITCHES.	3' - 2 7/8"
C SWITCHES.	3' - 2 15/16"
D SWITCHES.	3' - 2 31/32"
E SWITCHES	3' - 2 63/64"

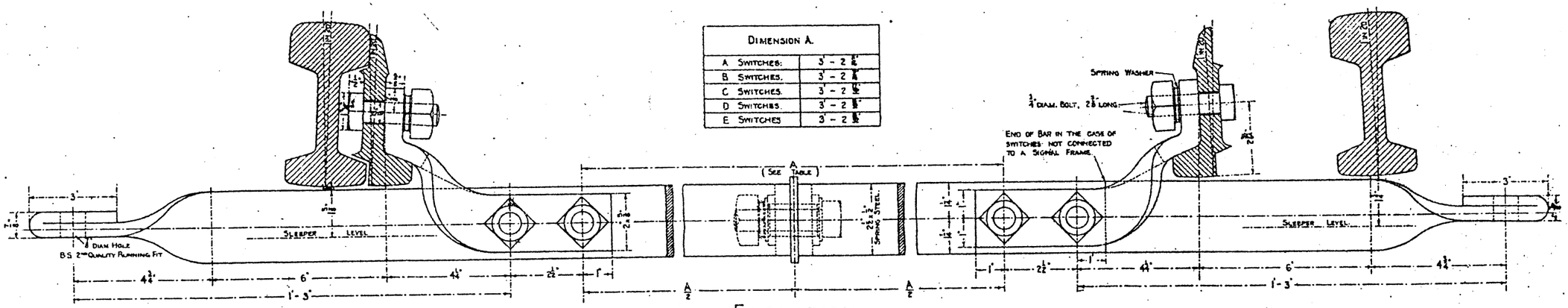

— ELEVATION. —

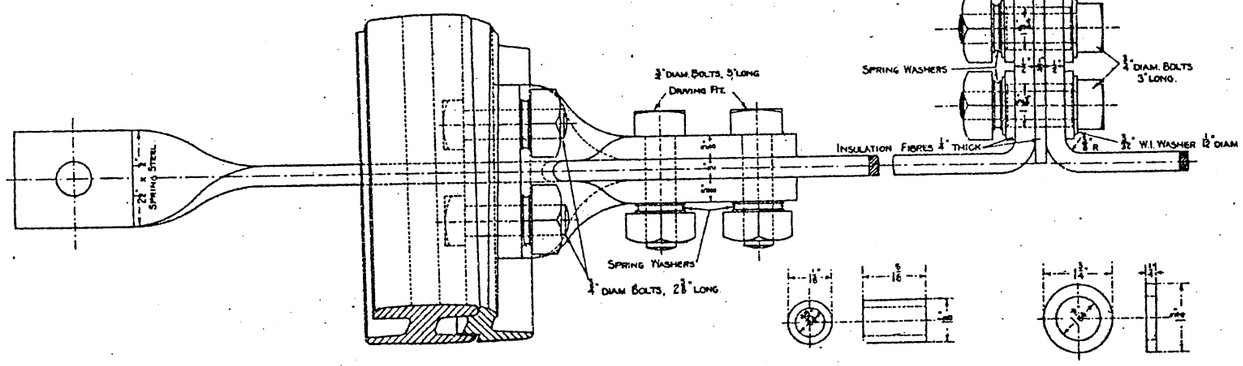

— PLAN. —

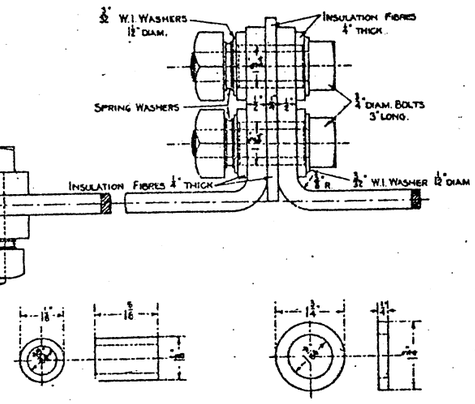

INSULATION FIBRES FOR SWITCH STRETCHER BAR & SOLEPLATE.

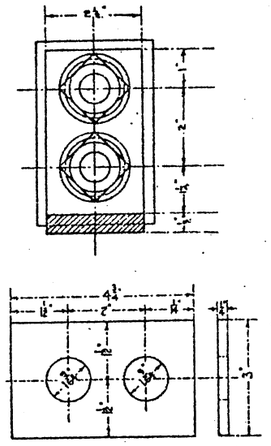

INSULATION FIBRE FOR SWITCH STRETCHER BAR

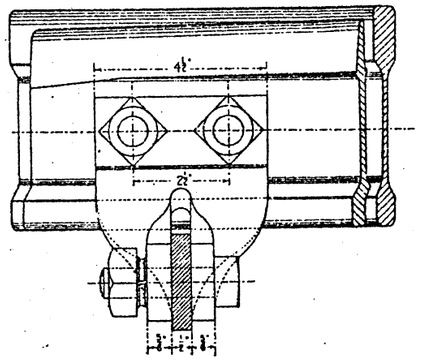

— END VIEW. —

ALL BOLTS AND NUTS TO CONFORM TO B.S. SPECIFICATION Nº 64, AND TO BE FITTED WITH SPRING WASHERS.

— QUARTER FULL SIZE. —

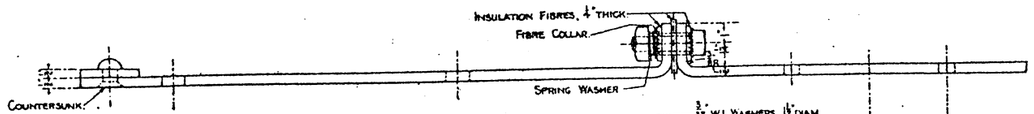

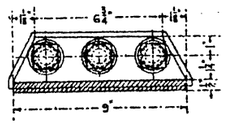

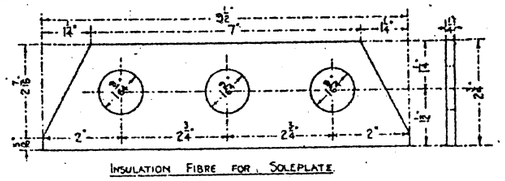

INSULATION FIBRE FOR SOLEPLATE.

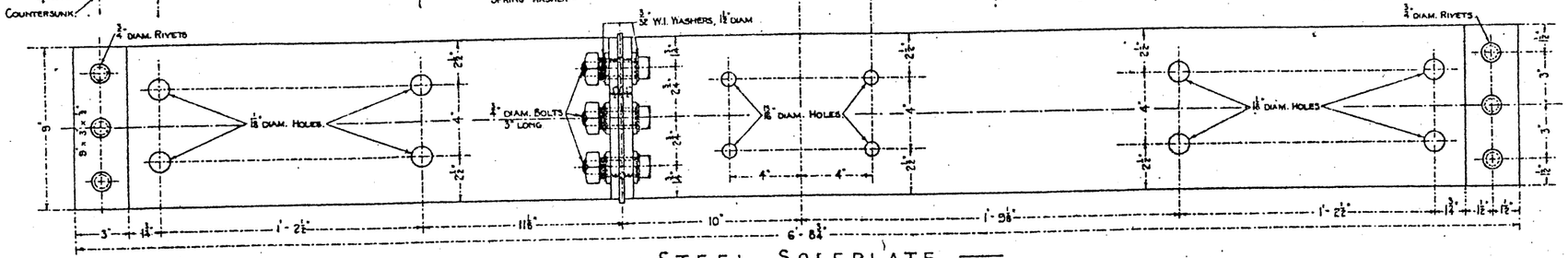

— STEEL SOLEPLATE. —

SCALE:- 1 1/2 INCHES = 1 FOOT.

INCHES. 12 9 6 3 0 1 FOOT.

INSULATED SECOND & THIRD SWITCH STRETCHER BARS FOR UNDERCUT & STRAIGHTCUT SWITCHES.

95 R. B. S. RAIL.

Elevation of Insulated 2nd & 3rd Switch Stretcher Bars for Straightcut Switches.

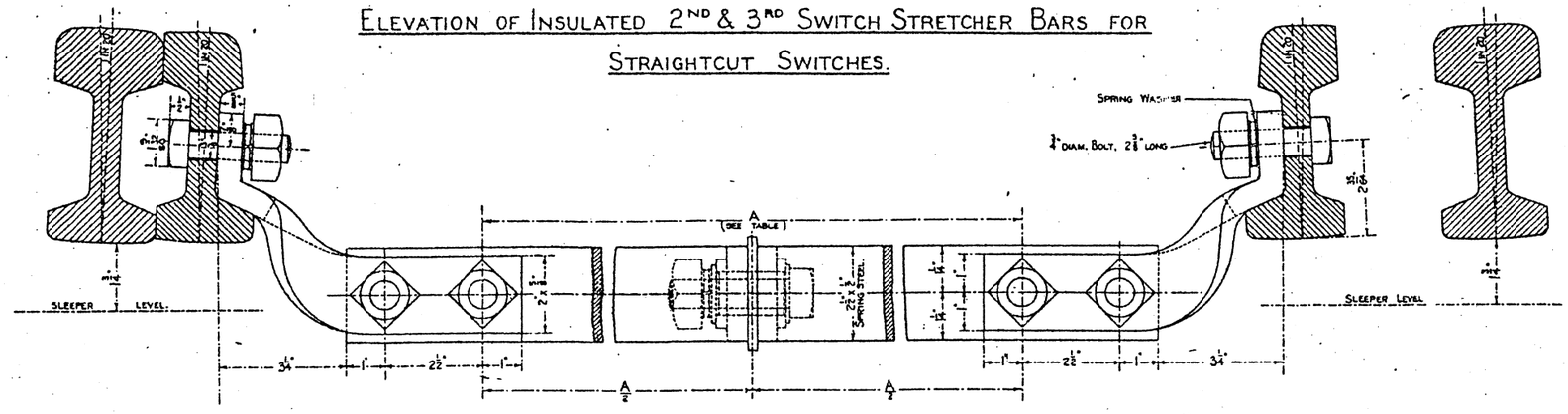

Elevation of Insulated 2nd & 3rd Switch Stretcher Bars for Undercut Switches.

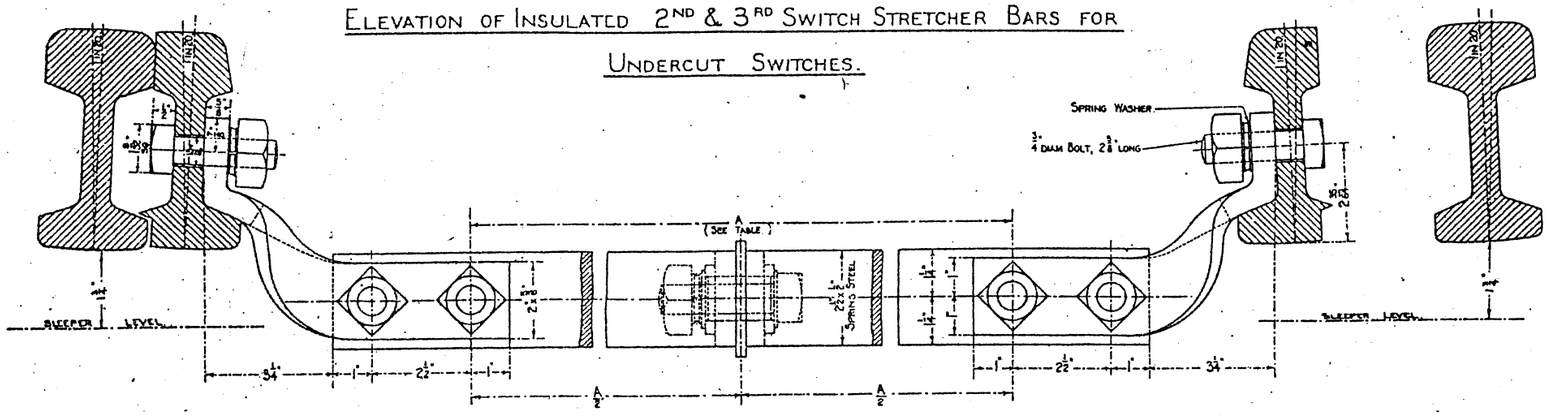

All Bolts and Nuts to conform to B.S. Specification No 64, and to be fitted with Spring Washers.

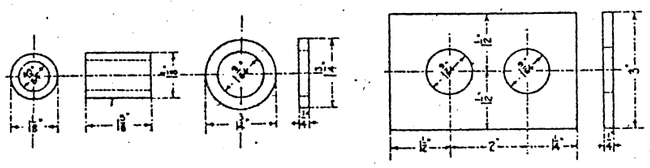

— Insulation Fibres. —

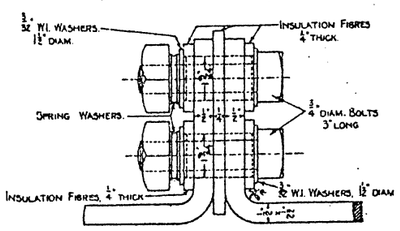

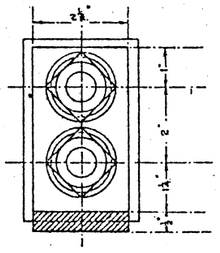

— Details of Insulated Joint —

Dimension A		
	2nd Bar	3rd Bar
A Switches.	3' - 3 5/8"	
B Switches.	3' - 3 1/2"	
C Switches.	3' - 3 3/4"	
D Switches	3' - 3 5/8"	3' - 4 1/4"
E Switches.	3' - 2 7/8"	3' - 4 1/2"

— Quarter Full Size. —

STANDARD RAILWAY EQUIPMENT — PERMANENT WAY. Nº 27.

INSULATED SWITCH STRETCHER BARS AND SOLEPLATE FOR 1 IN 8 DOUBLE SLIP ROADS.

FIRST BARS FOR UNDERCUT AND STRAICHTCUT SWITCHES.

95 R. B. S. RAIL.

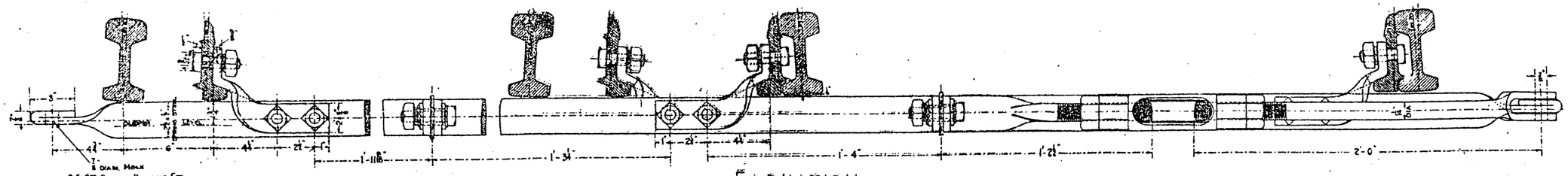

— ELEVATION. —

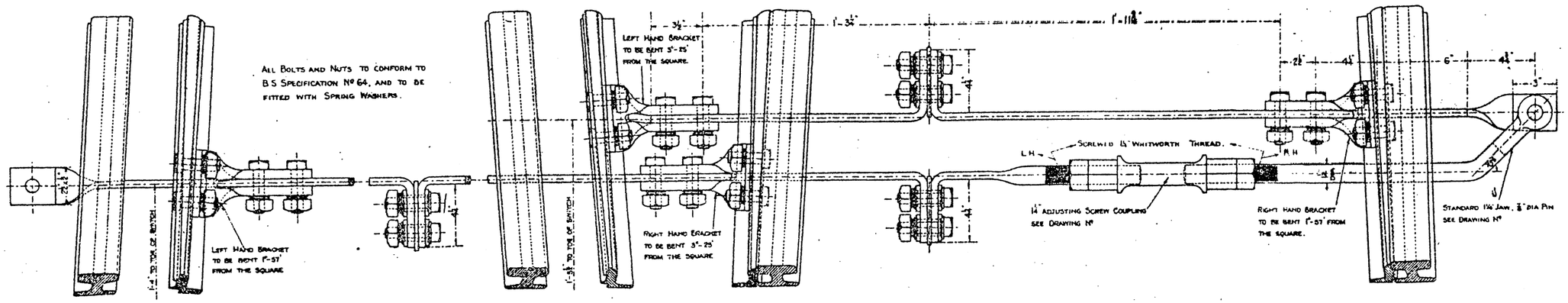

— PLAN. —

— SCALE:- 1½ INCHES - 1 FOOT. —

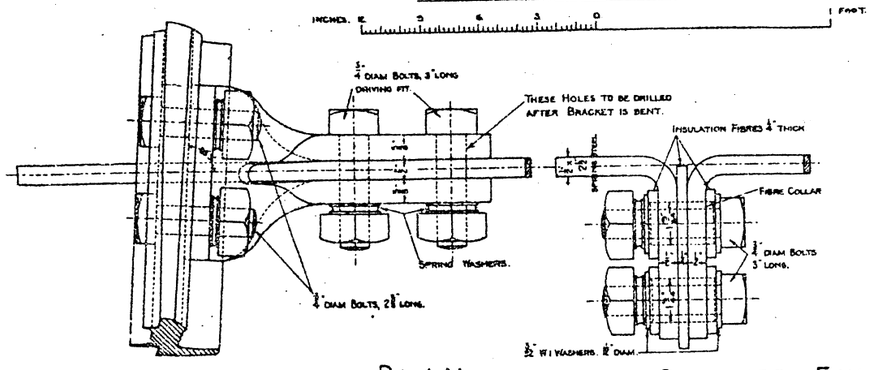

— PLAN. —

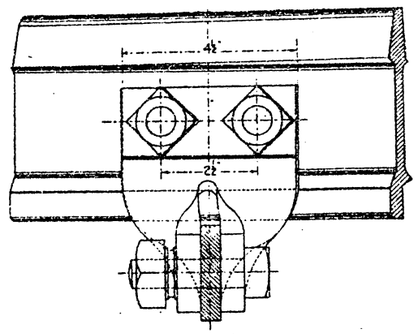

— END VIEW. —

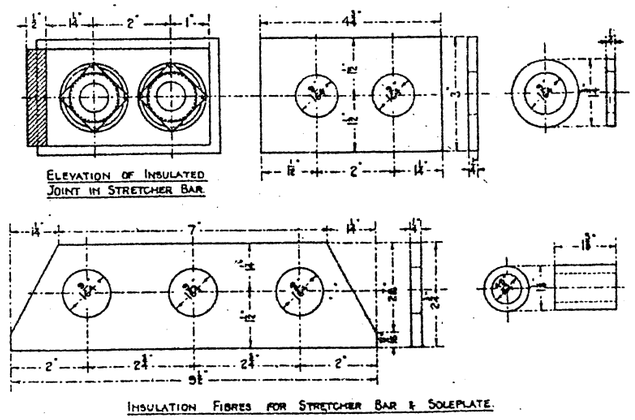

ELEVATION OF INSULATED JOINT IN STRETCHER BAR.

INSULATION FIBRES FOR STRETCHER BAR & SOLEPLATE.

— QUARTER FULL SIZE. —

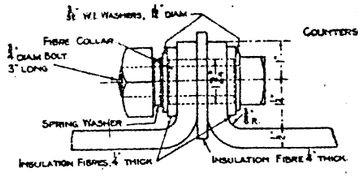

INSULATED JOINT IN STEEL SOLEPLATE.

— EIGHTH FULL SIZE. —

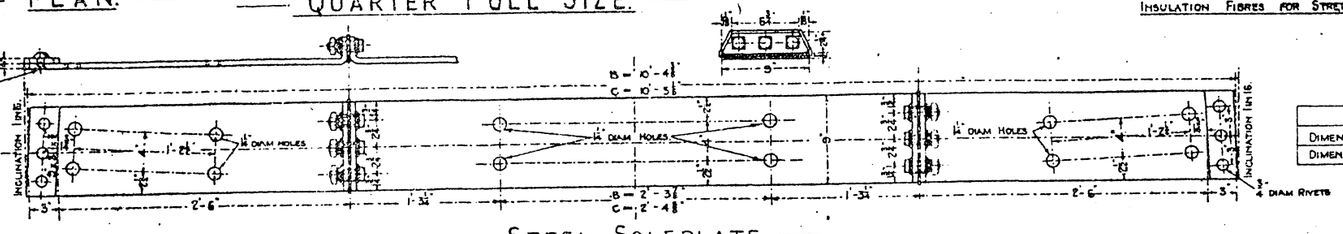

STEEL SOLEPLATE	
DIMENSION B	UNDERCUT SWITCHES
DIMENSION C	STRAIGHTCUT SWITCHES

— STEEL SOLEPLATE. —

— SCALE:- 3/16 INCHES - 1 FOOT —

STANDARD RAILWAY EQUIPMENT.— PERMANENT WAY.

STRETCHER BARS, SOLEPLATE AND FITTINGS FOR SWITCH DIAMOND CROSSING 1 IN 12.

95R. B. S. RAIL.

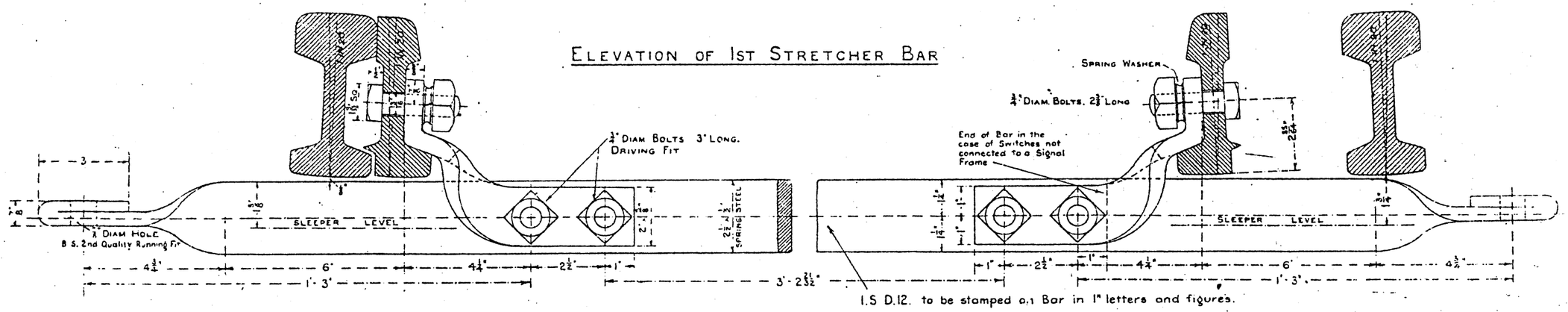

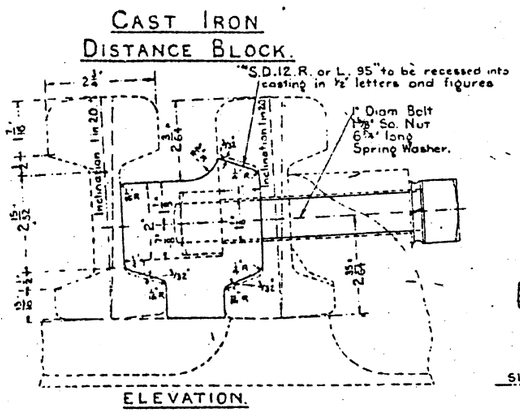

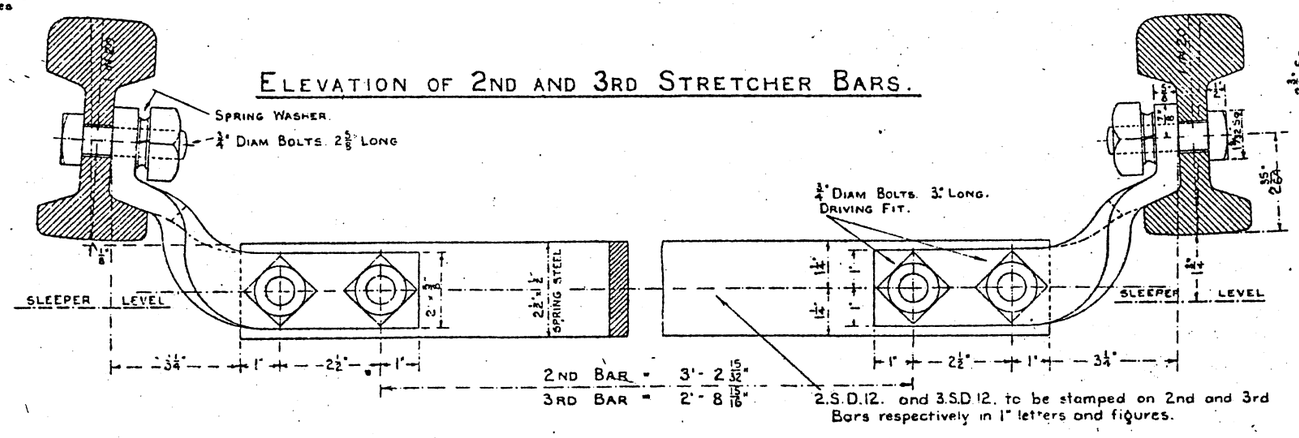

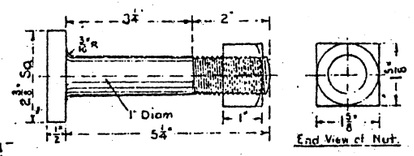

DETAILS OF STOCK RAIL BOLT.

NOTES.

For further details of Stretcher Bar Brackets and Bolts, see Drawing No 20. Bars to be made of Spring Steel to conform to B.S Specification No 24, Part 3. No 6c.

For further details of Cast Iron Distance Block Bolt, see Drawing No 19.

All Bolts and Nuts to conform to B.S Specification No 64, and to be fitted with Spring Washers.

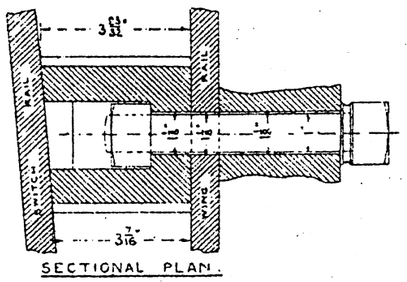

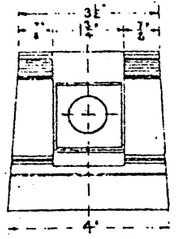

The above dimensions apply also to the corresponding L. Distance Block.

QUARTER FULL SIZE.

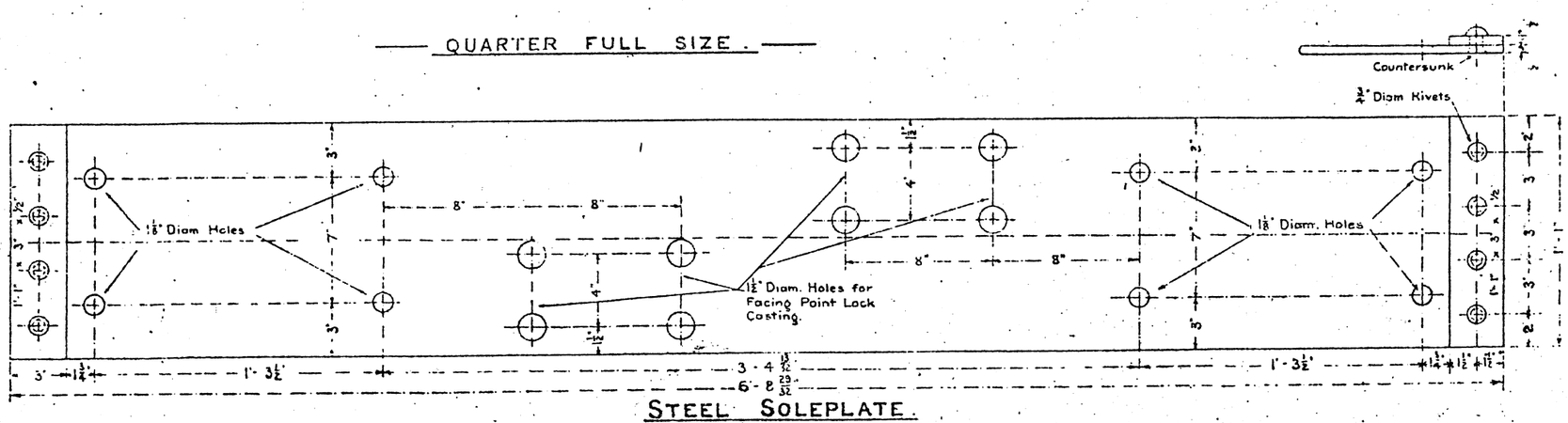

STEEL SOLEPLATE.

SCALE:- 1 1/2 INCHES = 1 FOOT.

STANDARD RAILWAY EQUIPMENT — PERMANENT WAY. Nº 28.

COMMON CROSSINGS 1 IN 4 & 1 IN 4½.

95 R, B.S. RAIL.

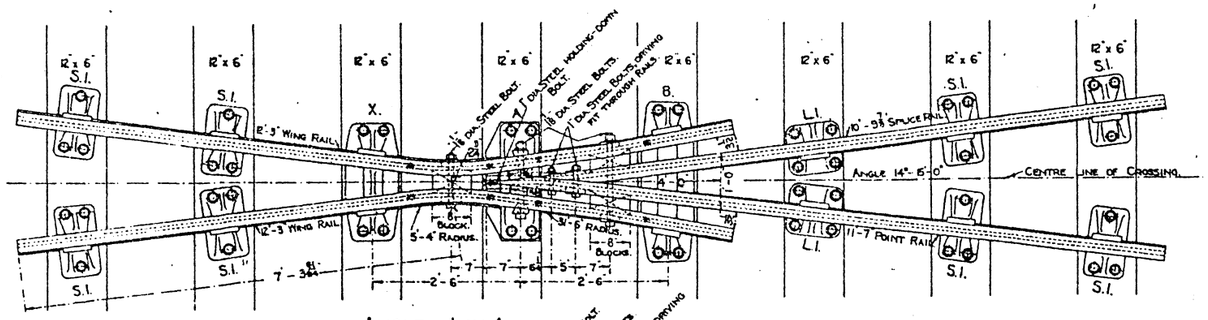

— ANGLE 1 IN 4. —

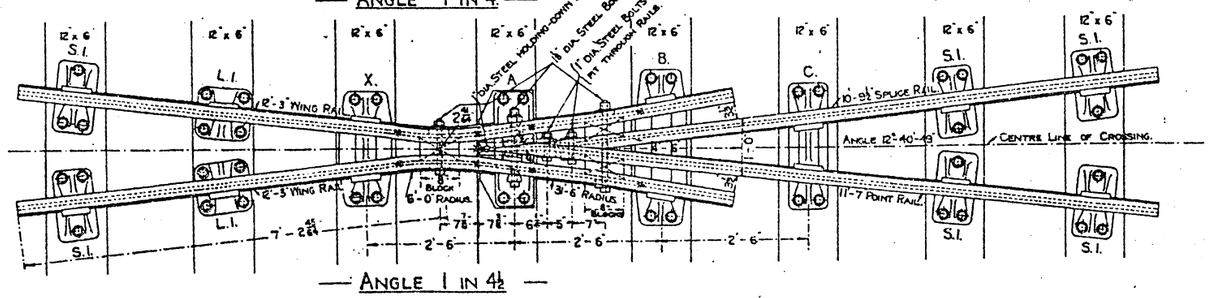

— ANGLE 1 IN 4½ —

SCALE:— ⅜ INCH — 1 FOOT.

NOTES.

THE POINT AND SPLICE RAILS TO BE VERTICAL FROM THE NOSE OF THE POINT RAIL TO THE HEEL OF THE SPLICE. FROM THE LATTER POINT EACH RAIL TO BE GRADUALLY CANTED TOWARDS THE RUNNING SIDE UNTIL THE FULL INCLINATION OF 1 IN 20 FROM THE VERTICAL IS REACHED AT A DISTANCE OF FIVE FEET BACK FROM THE NOSE IN THE CASE OF THE 1 IN 4 AND SEVEN FEET SIX INCHES IN THE CASE OF THE 1 IN 4½.

THE WING RAILS TO BE CANTED TOWARDS THE RUNNING SIDE AT AN INCLINATION OF 1 IN 20 FROM THE VERTICAL.

THE CHECK RAILS TO BE VERTICAL.

ALL BOLTS AND NUTS TO CONFORM TO THE BRITISH STANDARD SPECIFICATION Nº 64 AND TO BE FITTED WITH SPRING WASHERS.

13'-0" CHECK RAILS TO BE USED WITH THESE CROSSINGS, FOR DETAILS SEE DRAWING Nº 32. (1 IN 8 COMMON CROSSING.)

THE FOLLOWING DETAILS APPLICABLE TO ALL COMMON CROSSINGS APPEAR ON DRAWING Nº 32.
"CROSSING NOSE BEFORE AND AFTER MILLING, AND FITTING OF SPLICE."
"HOLDING DOWN BOLT, SADDLE AND WASHER PLATE."
"C.I. WASHERS, ALSO CHAIR SCREW FOR BUILT UP 'A' CHAIR FASTENINGS."

FOR DETAILS OF COMMON CROSSING CHAIRS, SEE DRAWING Nºˢ 36, 37, 38.

FOR DETAILS OF THE S.I. CHAIR, SEE DRAWING Nº 4.

FOR DETAILS OF THE L.I. CHAIR, SEE DRAWING Nº 6.

THE ANGLE OF CROSSING IN 1" FIGURES TO BE STAMPED ON THE OUTSIDE OF THE WEB OF THE POINT, SPLICE AND WING RAILS, 2'-4" FROM FISH JOINT END.

DIMENSIONS REFERRING TO CROSS SECTIONS.

ANGLE OF CROSSING	c	g	f
1 IN 4	2 3/4"	3 11/16"	6 5/16"
1 IN 4½	2 1/64"	3 5/32"	5 45/64"

DIMENSIONS REFERRING TO DETAILS OF CROSSING NOSE

ANGLE OF CROSSING	a	b	c	i	k	l	m	n	o	r
1 IN 4	7 3/8"	8 5/64"	1 1/8"	1 1/8"	7 51/64"	4 5/64"	.74"	11 5/64"	4 5/8"	10'-9 7/8"
1 IN 4½	8 5/8"	9 5/64"	1 5/32"	1 5/32"	8 51/64"	4 37/64"	8 5/32"	12 53/64"	5 3/4"	10'-9 7/8"

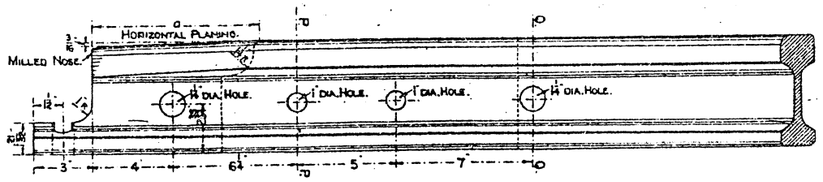

— ELEVATION. —

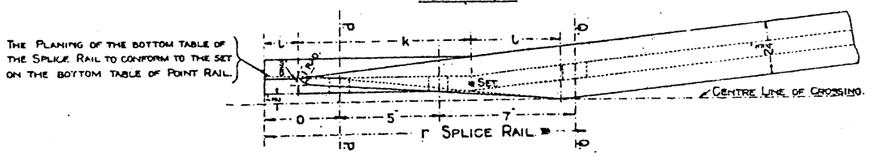

— SPLICE RAIL. —

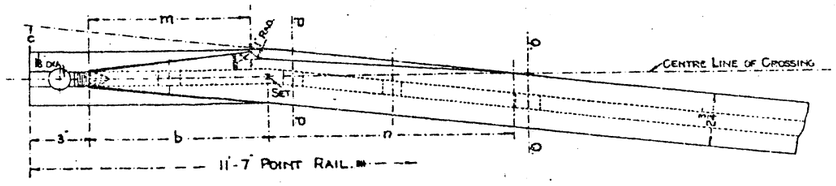

— POINT RAIL. —

— DETAILS OF CROSSING NOSE. —

SCALE:- 1½ INCHES = 1 FOOT.

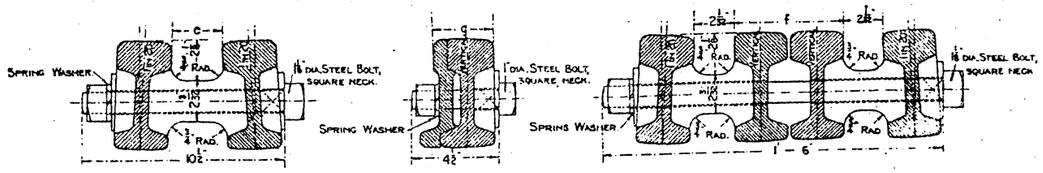

— SECTION THROUGH NECK BOLT. — — SECTION P.P. — — SECTION Q.Q. —

STANDARD RAILWAY EQUIPMENT — PERMANENT WAY.

Nº 28A

COMMON AND OBTUSE ANGLE CROSSINGS 1 IN 3½.

95 R. B.S. RAIL.

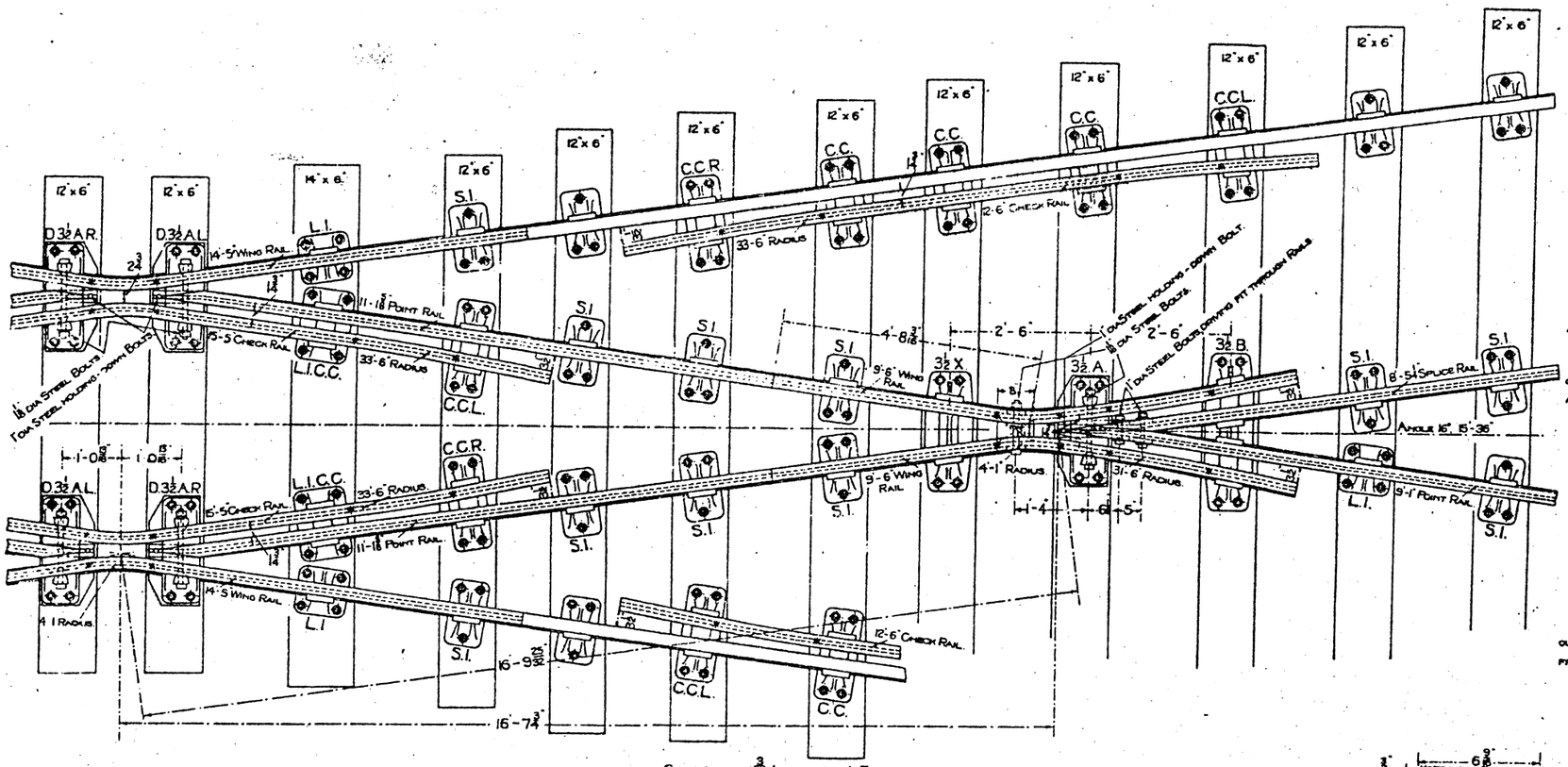

Scale:— 3/8 Inch = 1 Foot

Notes.

The lengths of the Point Rails shewn apply to straight roads only. In the case of curved intersections the lengths of these Rails will require to be varied.

The Point Rail of the obtuse angle crossing to be vertical from the nose to the set. From the latter point the Rail is to be gradually canted towards the running side until the full inclination of 1 in 20 from the vertical is reached at a distance of two feet six inches back from the nose.

The Point and Splice Rails of the common crossing to be vertical from the nose to the heel of the splice. From the latter point each Rail is to be gradually canted towards the running side until the full inclination of 1 in 20 from the vertical is reached at a distance of five feet back from the nose.

The Wing Rails to be canted towards the running side at an inclination of 1 in 20 from the vertical.

The Check Rails to be vertical.

All Bolts and Nuts to conform to the B.S. Specification Nº 64 and to be fitted with Spring Washers.

The following Details applicable to all common crossings appear on Drawing Nº 32 and similar Details for the obtuse angle crossings appear on Drawing Nº 43:—

"Crossing nose before and after milling
"Holding-down Bolt, Saddle and Washer Plate.
"C.I. Washers, also chair screw for built up "A" chair fastenings."

For Details of common crossing chairs see Drawing Nº 36A.
For Details of obtuse angle crossing chairs see Drawing Nº 36A.
For Details of CC, C.C.R. and C.C.L., chairs see Drawing Nº 38.
For Details of L.I. chair see Drawing Nº 6.
For Details of L.I.C.C. chair see Drawing Nº 36A.
For Details of S.I. chair see Drawing Nº 4.

The angle of crossing in figures to be stamped on the outside of the web of the Point, Splice and Wing Rails, 2'-4" from fishjoint end.

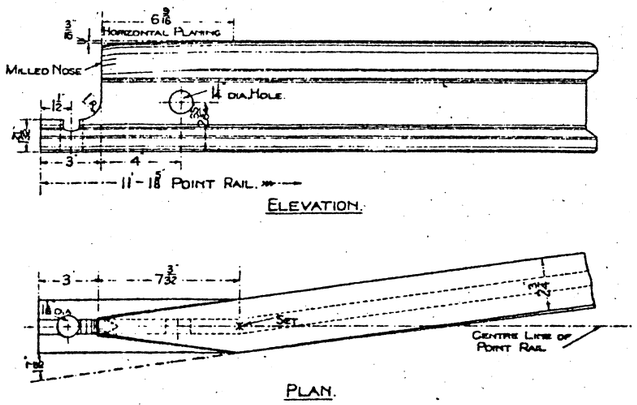

— Details of Point Rail. —

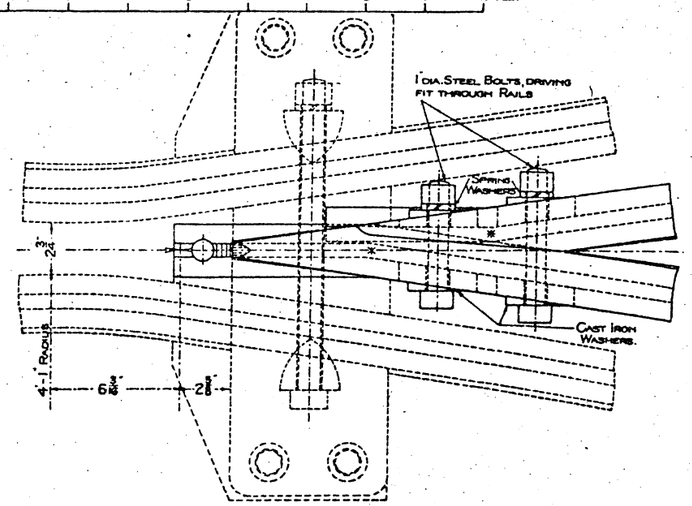

— Details of Fitting of Point and Splice Rails. —

Scale:— 1½ Inches = 1 Foot.

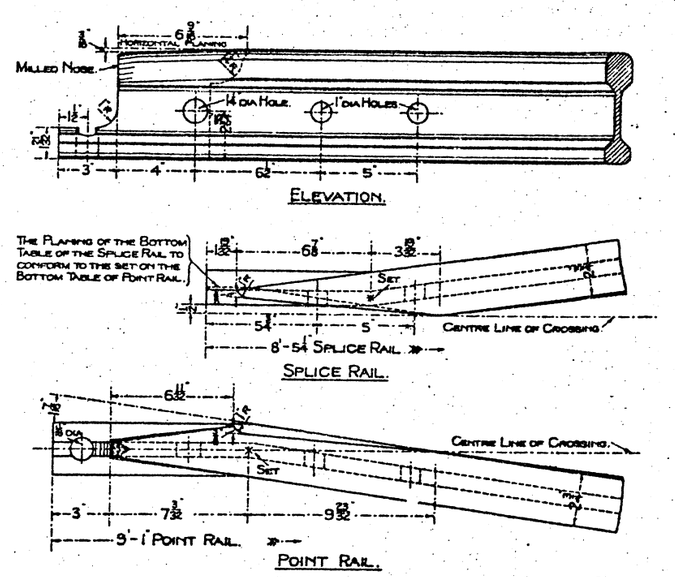

— Details of Crossing Nose. —

STANDARD RAILWAY EQUIPMENT — PERMANENT WAY.

Nº 28B

COMMON AND OBTUSE ANGLE CROSSINGS 1 IN 3.

95 R. B. S. RAIL.

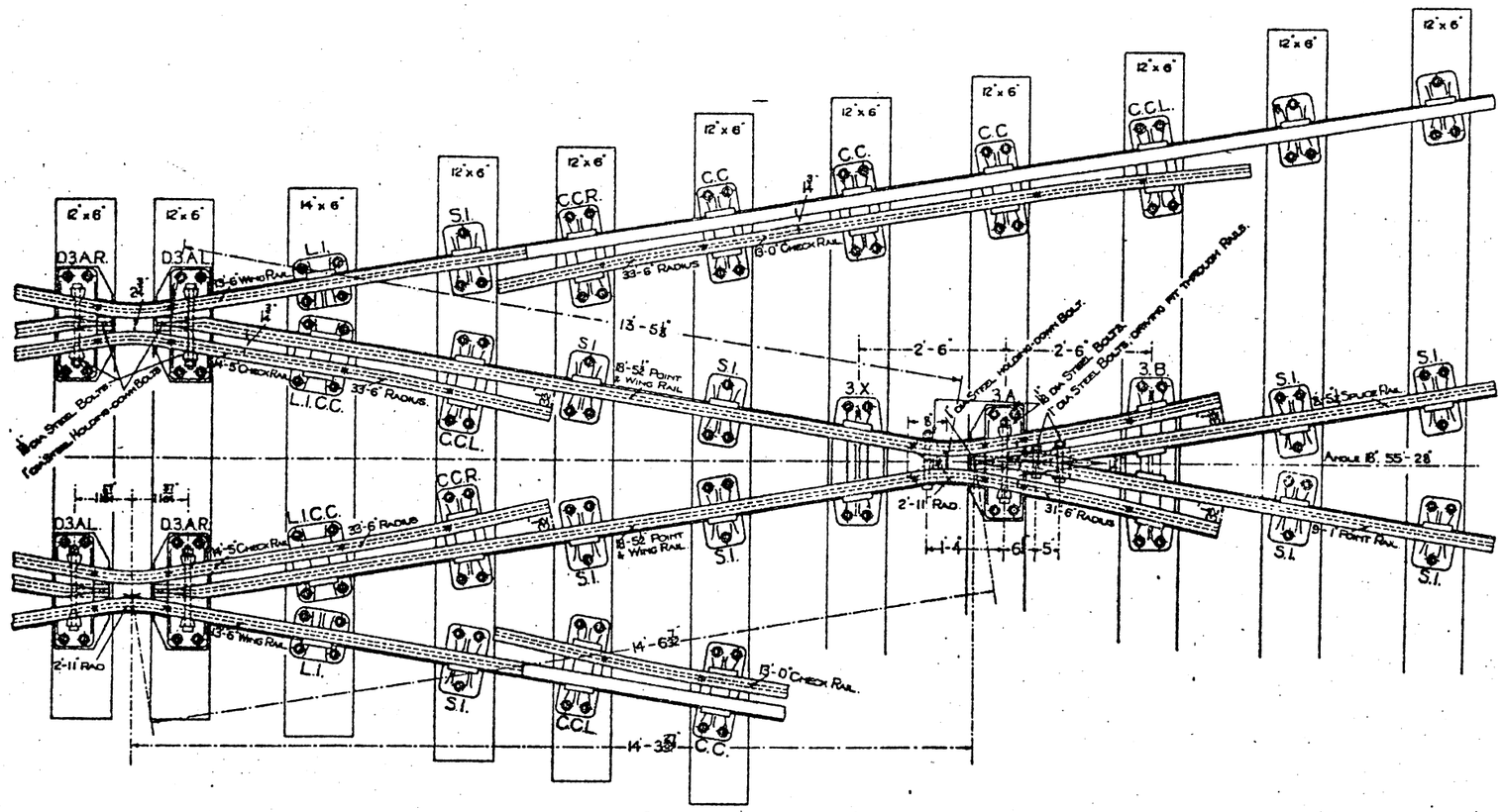

Scale:— 1 Inch = 1 Foot.

Notes.

The length of the Point and Wing Rails shewn apply to straight roads only. In the case of curved intersections the lengths of these Rails will require to be varied.

The Point Rail of the obtuse angle crossing to be vertical from the nose to the set. From the latter point the Rail is to be gradually canted towards the running side until the full inclination of 1 in 20 from the vertical is reached at a distance of two feet six inches back from the nose.

The Point and Splice Rails of the common crossing to be vertical from the nose to the heel of the splice. From the latter point each Rail is to be gradually canted towards the running side until the full inclination of 1 in 20 from the vertical is reached at a distance of five feet back from the nose.

The Wing Rails to be canted towards the running side at an inclination of 1 in 20 from the vertical.

The Check Rails to be vertical.

All Bolts and Nuts to conform to the B.S. Specification Nº 64 and to be fitted with Spring Washers.

The following Details applicable to all common crossings appear on Drawing Nº 32 and similar Details for the obtuse angle crossings appear on Drg Nº 48:—

"Crossing nose before and after milling."
"Holding-down Bolt, Saddle and Washer Plate."
"C I Washers, also chair screw for built up 'A' chair fastenings."

For Details of common crossing Chairs see Drawing Nº 36A.

For Details of Obtuse angle crossing Chairs see Drawing Nº 36A.

For Details of C.C., C.C.R., and C.C.L. Chairs see Drawing Nº 38.

For Details of L.I. Chair see Drawing Nº 6.

For Details of the S.I. Chair see Drawing Nº 4.

For Details of L.I.C.C. Chair see Drawing Nº 36A.

The angle of crossing in 1" figures to be stamped on the outside of the web of the Point, Splice and Wing Rails, 2'-4" from fishjoint end.

When the common crossing only is required, the Wing Rails to be 12'-3" long.

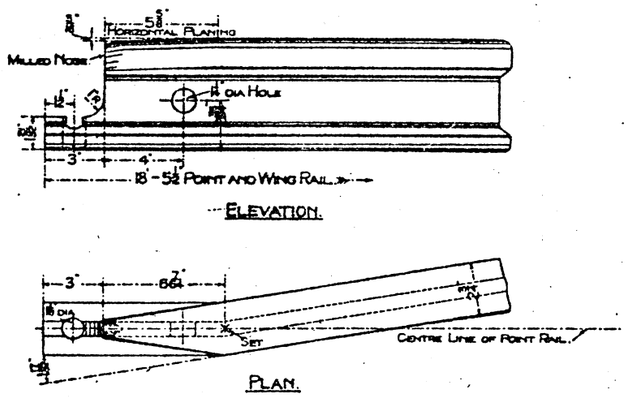

— Details of Point Rail. —

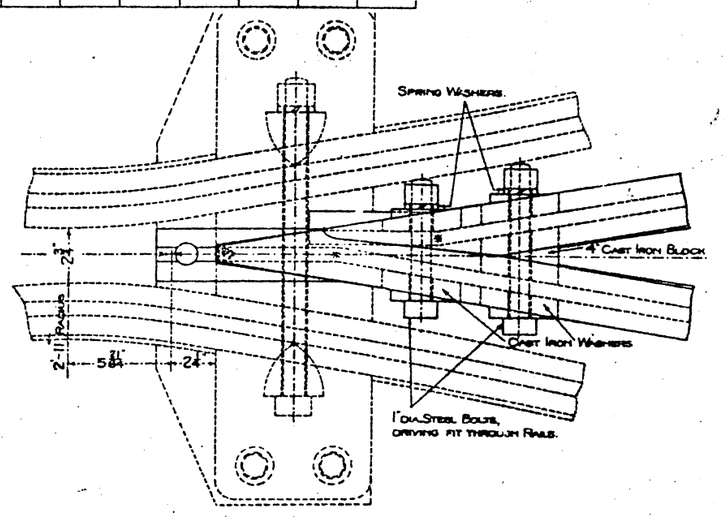

— Details of Fitting of Point and Splice Rails. —

Scale:— 1 Inches = 1 Foot.

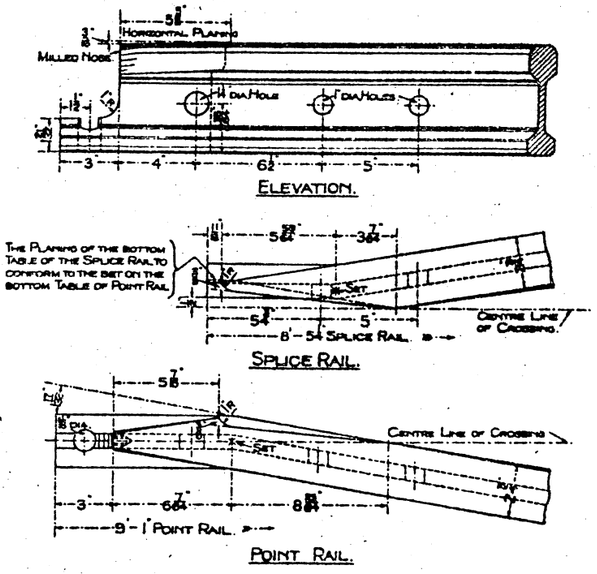

— Details of Crossing Nose. —

STANDARD RAILWAY EQUIPMENT — PERMANENT WAY.

Nº 28C

COMMON AND OBTUSE ANGLE CROSSINGS 1 IN 2½.

95 R. B. S. RAIL.

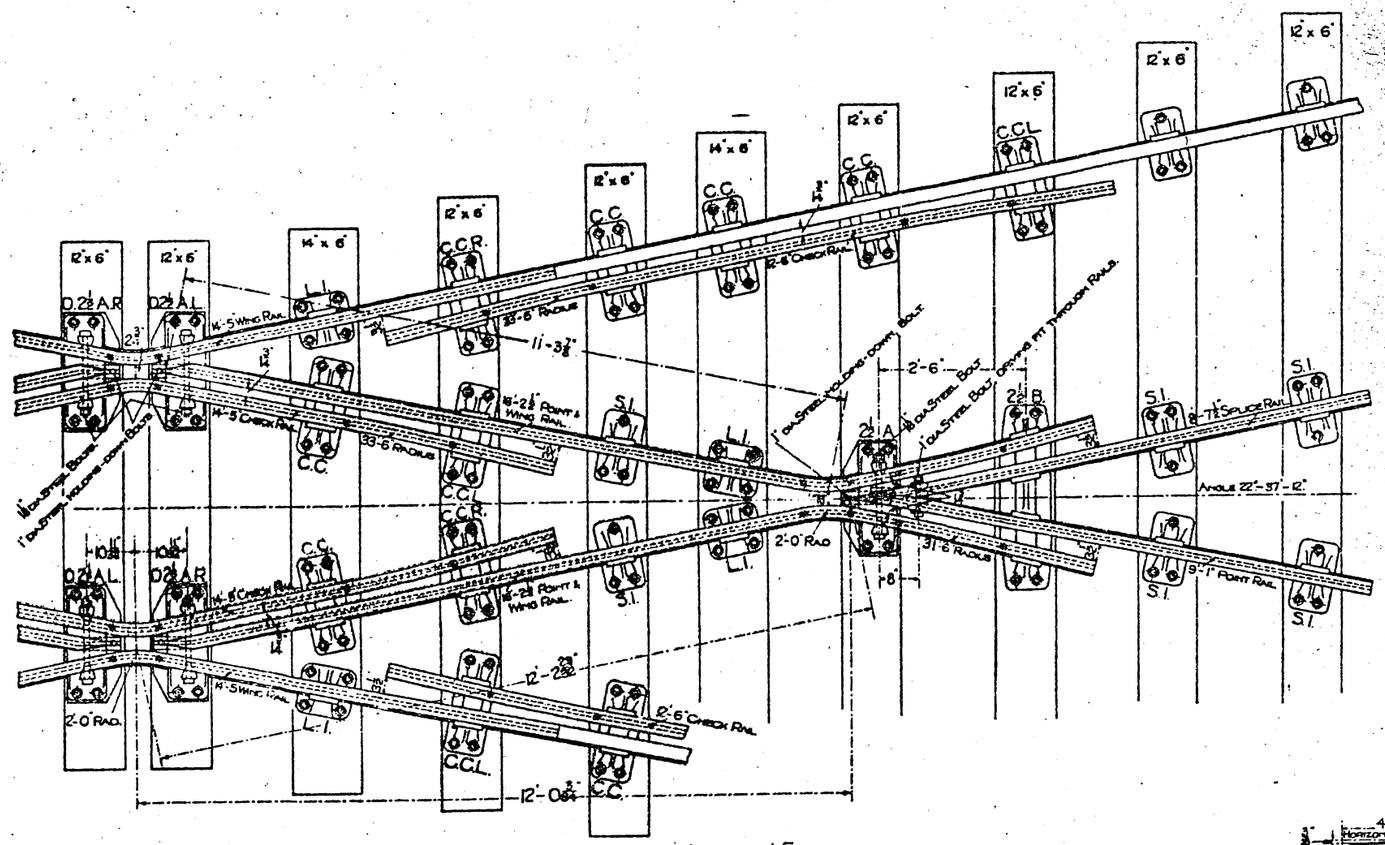

Scale:— ½ Inch = 1 Foot.

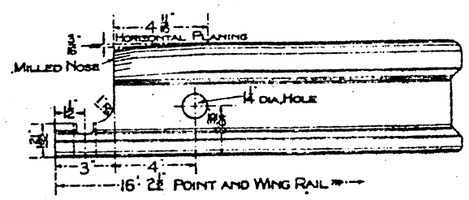

Elevation.

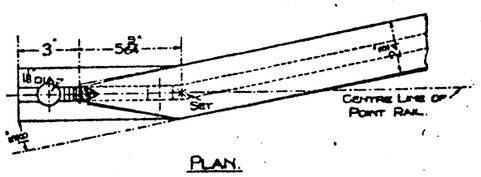

Plan.

— Details of Point Rail. —

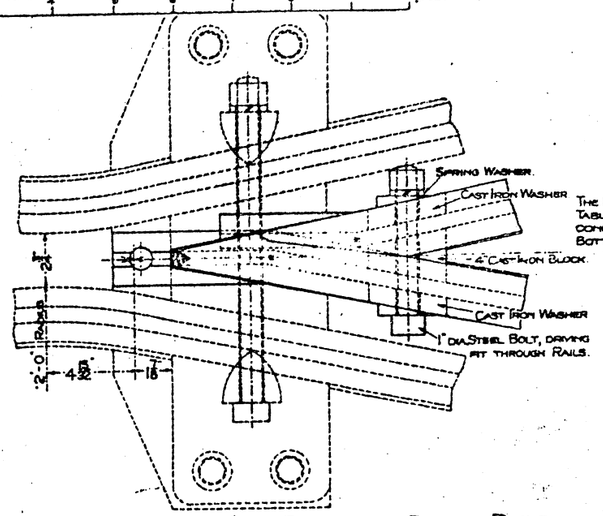

— Details of Fitting of Point and Splice Rails. —

Scale:— 1½ Inches = 1 Foot.

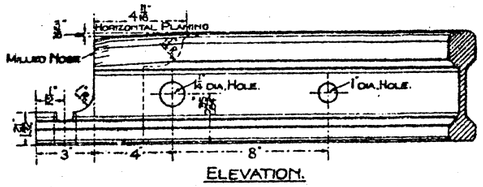

Elevation.

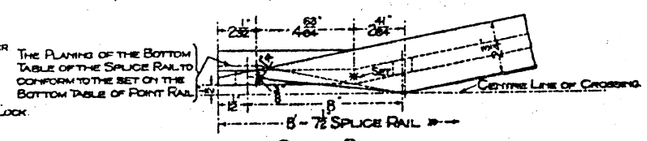

Splice Rail.

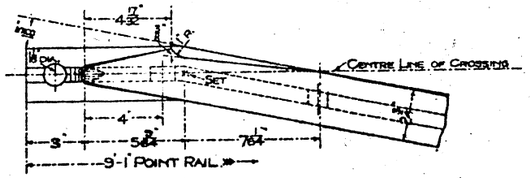

Point Rail.

— Details of Crossing Nose. —

Scale:— ½ Inches = 1 Foot.

Notes.

The length of the Point and Wing Rails shewn apply to straight roads only. In the case of curved intersections the lengths of these Rails will require to be varied.

The Point Rail of the obtuse angle crossing to be vertical from the nose to the set. From the latter point the Rail is to be gradually canted towards the running side until the full inclination of 1 in 20 from the vertical is reached at a distance of two feet six inches back from the nose.

The Point and Splice Rails of the common crossing to be vertical from the nose to the heel of the Splice. From the latter point each Rail is to be gradually canted towards the running side until the full inclination of 1 in 20 from the vertical is reached at a distance of five feet back from the nose.

The Wing Rails to be canted towards the running side at an inclination of 1 in 20 from the vertical.

The Check Rails to be vertical.

All Bolts and Nuts to conform to the B.S. Specification Nº 64 and to be fitted with Spring Washers.

The following Details applicable to all common crossings appear on Drawing Nº 32 and similar Details for the obtuse angle crossings appear on Drawing Nº 43:—

"Crossing nose before and after milling."
"Holding-down Bolt, Saddle and Washer Plate."
"C.I. Washers, also chair screw for built up "A" chair fastenings."

For Details of common crossing Chairs see Drawing Nº 36A.

For Details of Obtuse angle crossing Chairs see Drawing Nº 36A.

For Details of C.C., C.C.R. and C.C.L., Chairs see Drawing Nº 38.

For Details of the S.I. Chair see Drawing Nº 4.

For Details of the L.I. Chair see Drawing Nº 6.

The angle of crossing in 1" figures to be stamped on the outside of the web of the Point, Splice and Wing Rails, 2'-4" from fishjoint end.

When the common crossing only is required the Wing Rails to be 11'-10" long and two S.I. Chairs will supersede the C.C.L. and C.C.R. Chairs on the Wing Rails.

STANDARD RAILWAY EQUIPMENT — PERMANENT WAY.

Nº 28D

COMMON AND OBTUSE ANGLE CROSSINGS 1 IN 2.

95 R. B. S. RAIL.

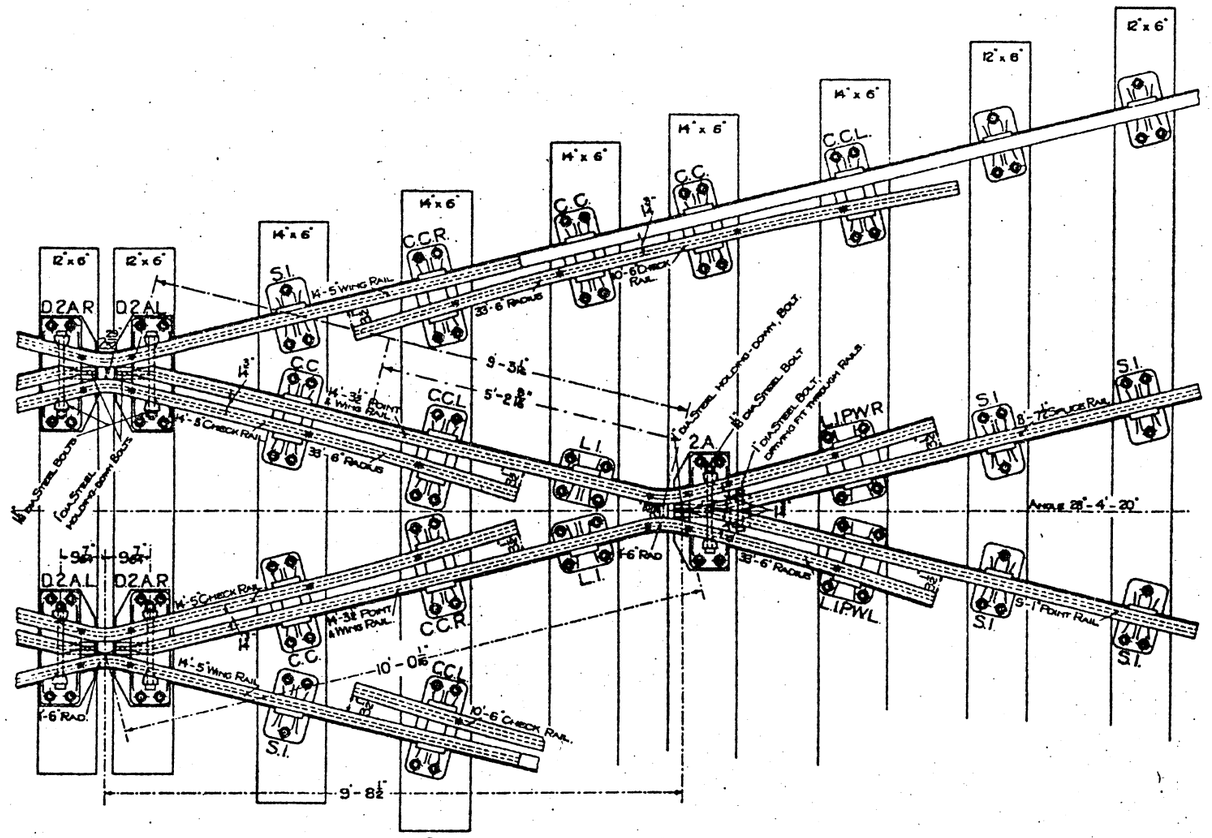

Scale:— 3/8 Inch = 1 Foot

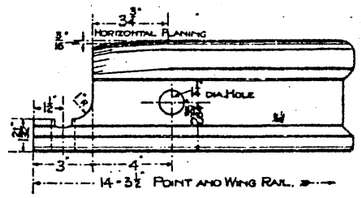

Elevation.

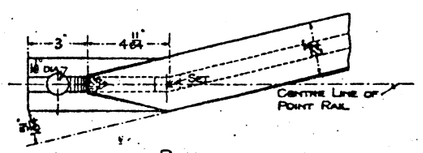

Plan.

— Details of Point Rail. —

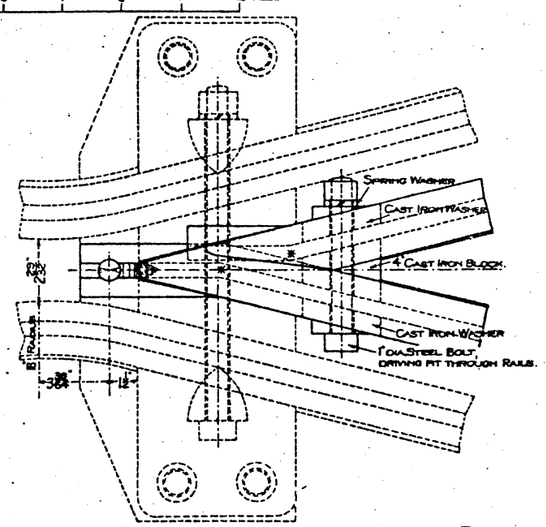

— Details of Fitting of Point and Splice Rails. —

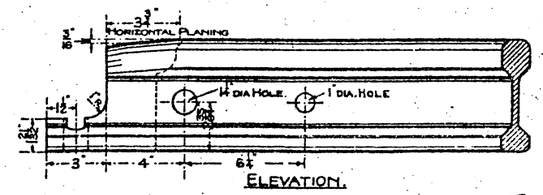

Elevation.

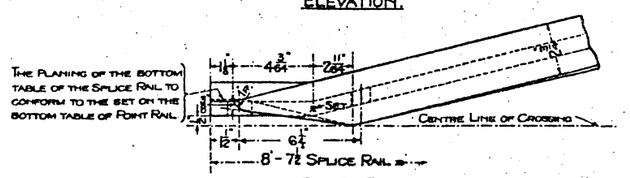

Splice Rail.

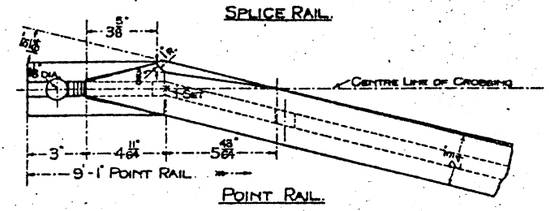

Point Rail.

— Details of Crossing Nose. —

Scale:— 1½ Inches = 1 Foot.

NOTES.

The length of the Point and Wing Rails shewn apply to straight roads only. In the case of curved intersections the lengths of these Rails will require to be varied.

The Point Rail of the obtuse angle crossing to be vertical from the nose to the set. From the latter point the Rail is to be gradually canted towards the running side until the full inclination of 1 in 20 from the vertical is reached at a distance of two feet six inches back from the nose.

The Point and Splice Rails of the common crossing to be vertical from the nose to the heel of the splice. From the latter point each Rail is to be gradually canted towards the running side until the full inclination of 1 in 20 from the vertical is reached at a distance of two feet six inches back from the nose.

The Wing Rails to be canted towards the running side at an inclination of 1 in 20 from the vertical.

The Check Rails to be vertical.

All Bolts and Nuts to conform to the B.S. Specification Nº 64 and to be fitted with Spring Washers.

The following Details applicable to all common crossings appear on Drawing Nº 32 and similar Details for the obtuse angle crossings appear on Drawing Nº 43:—

"Crossing nose before and after milling."
"Holding-down Bolt, Saddle and Washer Plate."
"C.I. Washers, also chair screw for built up 'A' chair fastenings."

For Details of common crossing Chairs see Drawing Nº 36A.

For Details of Obtuse angle crossing Chairs see Drawing Nº 36A.

For Details of C.C., C.C.R. and C.C.L. Chairs see Drawing Nº 38.

For Details of L.I.P.W.R. and L.I.P.W.L. see Drawing Nº 36A.

For Details of the S.I. Chair see Drawing Nº 4.

The angle of crossing in 1" figures to be stamped on the outside of the web of the Point, Splice and Wing Rails, 2'-4" from fishjoint end.

When the common crossing only is required, the Wing Rails to be 10'-0" long and two S.I. Chairs will supersede the C.C.L. and C.C.R. Chairs on the Wing Rails.

STANDARD RAILWAY EQUIPMENT — PERMANENT WAY.

COMMON AND OBTUSE ANGLE CROSSINGS 1 IN 1½.

95 R. B. S. RAIL.

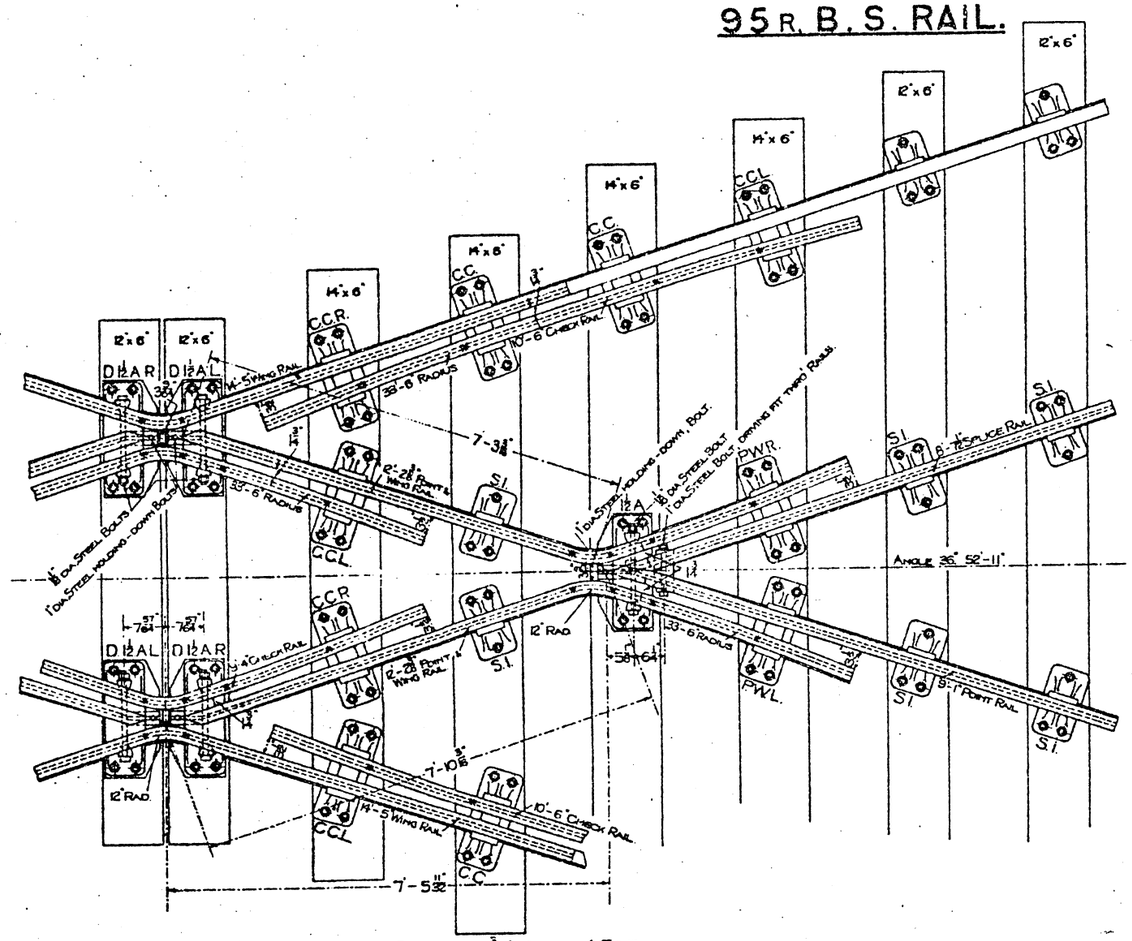

SCALE:- ⅜ INCH = 1 FOOT.

NOTES.

THE LENGTH OF THE POINT AND WING RAILS SHEWN APPLY TO STRAIGHT ROADS ONLY. IN THE CASE OF CURVED INTERSECTIONS THE LENGTHS OF THESE RAILS WILL REQUIRE TO BE VARIED.

THE POINT RAIL OF THE OBTUSE ANGLE CROSSING TO BE VERTICAL FROM THE NOSE TO THE SET. FROM THE LATTER POINT THE RAIL IS TO BE GRADUALLY CANTED TOWARDS THE RUNNING SIDE UNTIL THE FULL INCLINATION OF 1 IN 20 FROM THE VERTICAL IS REACHED AT A DISTANCE OF TWO FEET SIX INCHES BACK FROM THE NOSE.

THE POINT AND SPLICE RAILS OF THE COMMON CROSSING TO BE VERTICAL FROM THE NOSE TO THE HEEL OF THE SPLICE. FROM THE LATTER POINT EACH RAIL IS TO BE GRADUALLY CANTED TOWARDS THE RUNNING SIDE UNTIL THE FULL INCLINATION OF 1 IN 20 FROM THE VERTICAL IS REACHED AT A DISTANCE OF TWO FEET SIX INCHES BACK FROM THE NOSE.

THE WING RAILS TO BE CANTED TOWARDS THE RUNNING SIDE AT AN INCLINATION OF 1 IN 20 FROM THE VERTICAL.

THE CHECK RAILS TO BE VERTICAL.

ALL BOLTS AND NUTS TO CONFORM TO THE B.S. SPECIFICATION Nº 64 AND TO BE FITTED WITH SPRING WASHERS.

THE FOLLOWING DETAILS APPLICABLE TO ALL COMMON CROSSINGS APPEAR ON DRAWING Nº 32 AND SIMILAR DETAILS FOR THE OBTUSE ANGLE CROSSINGS APPEAR ON DRAWING Nº 43:-

"CROSSING NOSE BEFORE AND AFTER MILLING."
"HOLDING-DOWN BOLT, SADDLE AND WASHER PLATE."
"C.I. WASHERS, ALSO CHAIR SCREW FOR BUILT UP "A" CHAIR FASTENINGS."

FOR DETAILS OF COMMON CROSSING CHAIRS SEE DRAWING Nº 36A.

FOR DETAILS OF OBTUSE ANGLE CROSSING CHAIRS SEE DRAWING Nº 36A.

FOR DETAILS OF C.C., C.C.R., AND C.C.L. CHAIRS SEE DRAWING Nº 38.

FOR DETAILS OF P.W.R. AND P.W.L. SEE DRAWING Nº 38A.

FOR DETAILS OF THE S.I. CHAIR SEE DRAWING Nº 4.

THE ANGLE OF CROSSING IN FIGURES TO BE STAMPED ON THE OUTSIDE OF THE WEB OF THE POINT, SPLICE AND WING RAILS, 2'-4" FROM FISHJOINT END.

WHEN THE COMMON CROSSING ONLY IS REQUIRED, THE WING RAILS TO BE 10'-0" LONG AND TWO S.I. CHAIRS WILL SUPERSEDE THE C.C.L. AND C.C.R. CHAIRS ON THE WING RAILS.

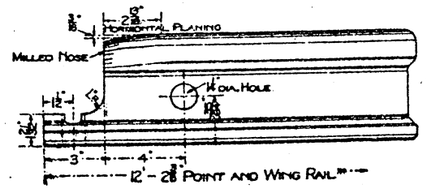

ELEVATION.

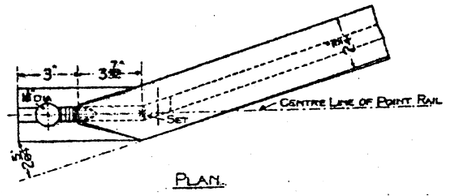

PLAN.

— DETAILS OF POINT RAIL. —

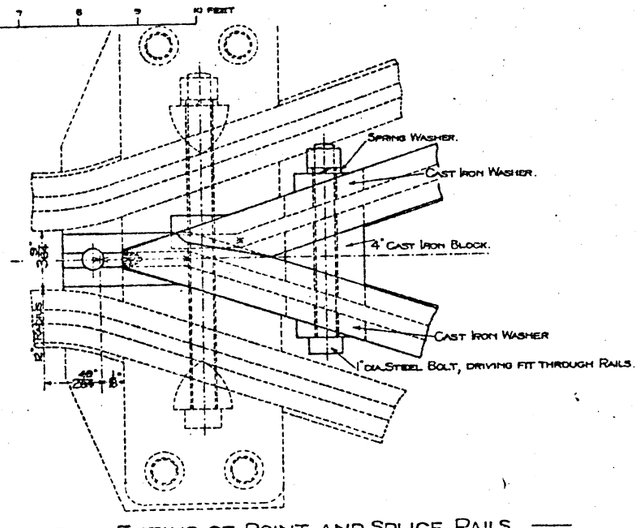

— DETAILS OF FITTING OF POINT AND SPLICE RAILS. —

SCALE:- INCHES = 1 FOOT.

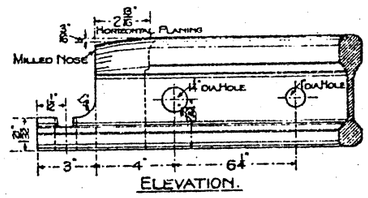

ELEVATION.

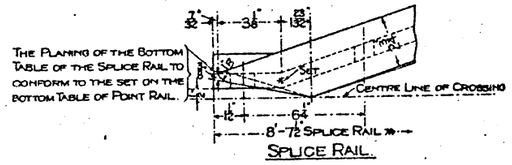

SPLICE RAIL.

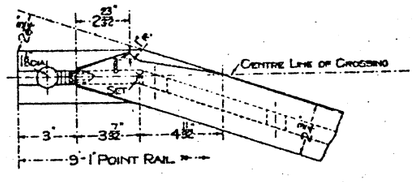

POINT RAIL.

— DETAILS OF CROSSING NOSE. —

STANDARD RAILWAY EQUIPMENT — PERMANENT WAY.

COMMON CROSSINGS 1 IN 5 & 1 IN 5½.

95 R. B.S. RAIL.

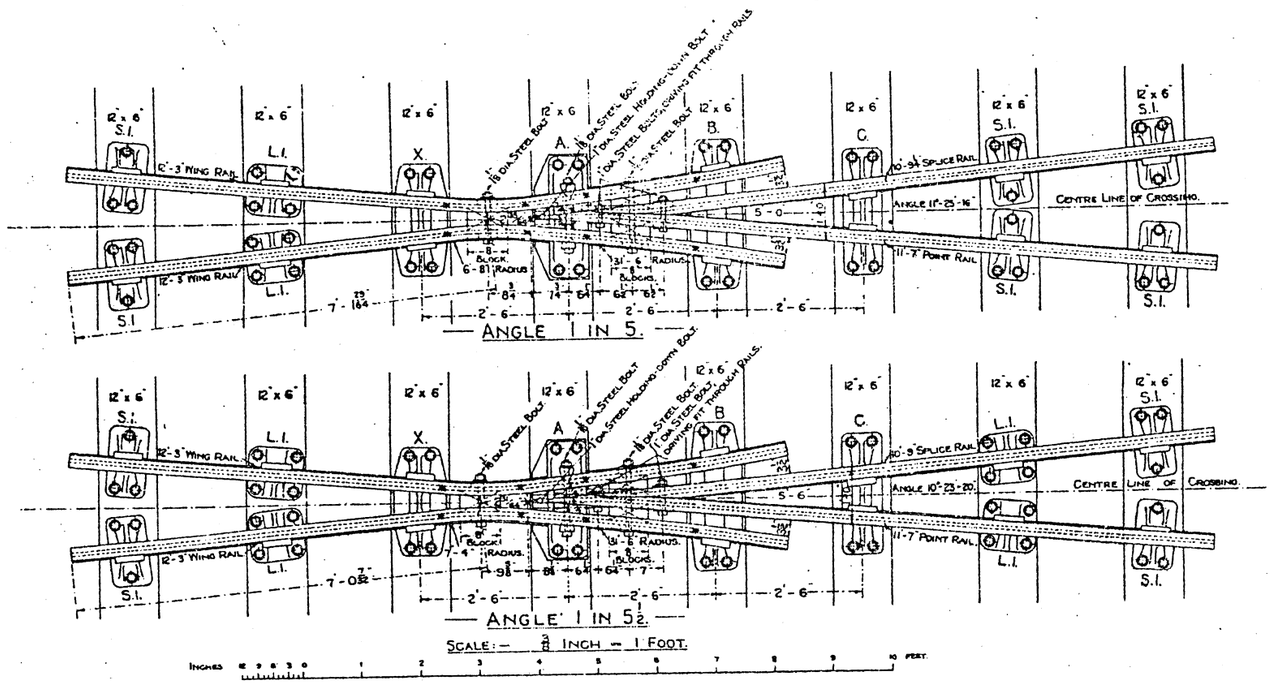

Notes.

The Point and Splice Rails to be vertical from the nose of the Point Rail to the heel of the Splice. From the latter point each Rail to be gradually canted towards the running side until the full inclination of 1 in 20 from the vertical is reached at a distance of seven feet six inches back from the nose.

The Wing Rails to be canted towards the running side at an inclination of 1 in 20 from the vertical.

The Check Rails to be vertical.

All Bolts and Nuts to conform to the British Standard Specification Nº 64, and to be fitted with Spring Washers.

8'-0" Check Rails to be used with these crossings, for details see Drawing Nº 32. (1 in 8 common crossing)

The following Details applicable to all common crossings appear on Drawing Nº 32.

- Crossing Nose before and after milling, and fitting of Splice.
- Holding-down Bolt, Saddle and Washer Plate.
- C.I. Washers, also Chair Screw for built up "A" chair fastenings.

For Details of common crossing chairs, see Drawing Nºs 36, 37, 38.

For Details of the S.I. Chair see Drawing Nº 4.

For Details of the L.I. Chair, see Drawing Nº 6.

The angle of the crossing in figures to be stamped on the outside of the web of the Point, Splice and Wing Rails, 2'-4" from fishjoint end.

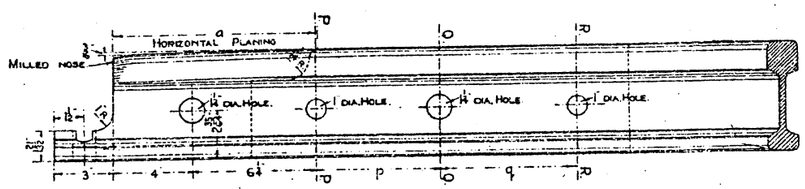

— Elevation. —

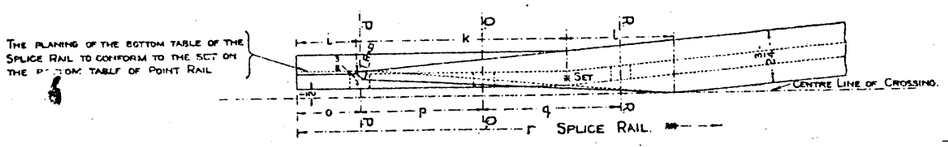

— Splice Rail. —

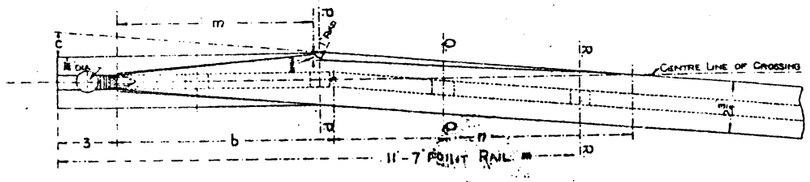

— Point Rail —

— Details of Crossing Nose —

Dimensions referring to Cross Sections.

Angle of Crossing	e	g	f	h
1 in 5	2 61/64"	2 31/32"	4 1/4"	5 29/32"
1 in 5½	2 31/64"	2 29/32"	3 1/4"	5 61/64"

Dimensions referring to Details of Crossing Nose.

Angle of Crossing	a	b	c	i	k	l	m	n	o	p	q	r
1 in 5	9 3/8"	10 1/16"	1 29/64"	2 4"	9 15/16"	5 5/16"	9 1/16"	1-1 1/16"	3 1/2"	6 1/2"	6 1/2"	10-9 1/4"
1 in 5½	10 5/16"	11 1/16"	1 17/64"	3"	10 1/16"	5 5/16"	9 31/32"	1-3 1/32"	3 1/4"	6 1/4"	7"	10-9"

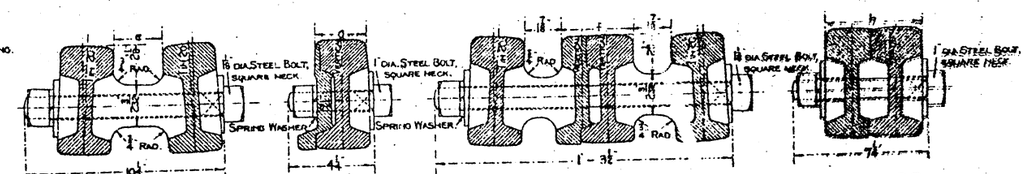

— Section through Neck Bolt — Section P.P. — Section Q.Q. — Section R.R.

Scale: 1½ Inches = 1 Foot.

Inches — Feet

COMMON CROSSINGS 1 IN 6 & 1 IN 6½.

95 R. B.S. RAIL.

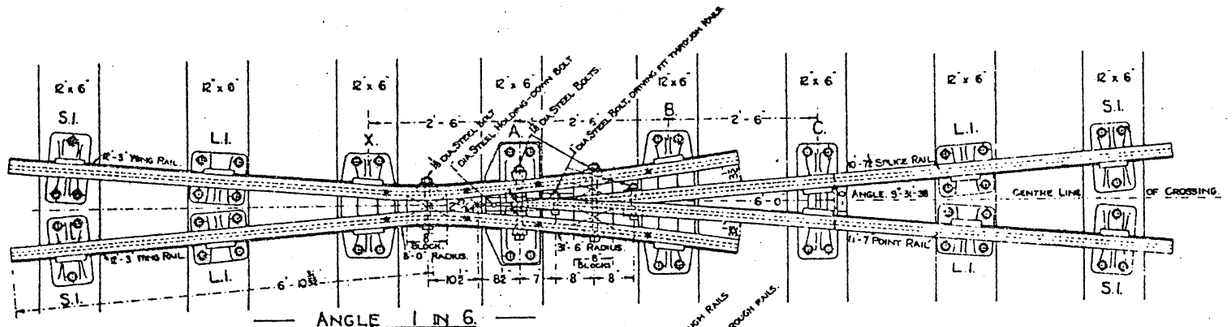

Scale:— ⅜ Inch = 1 Foot.

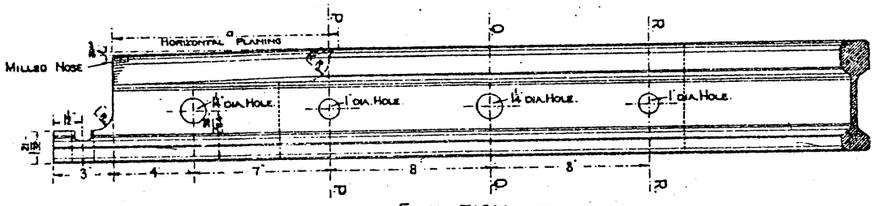

— Elevation. —

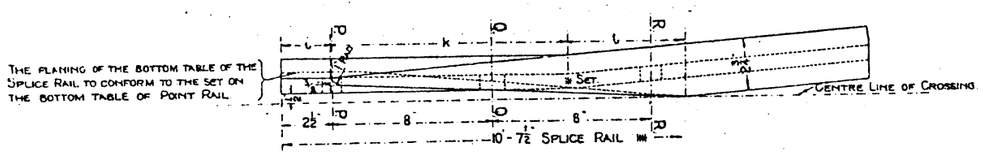

— Splice Rail. —

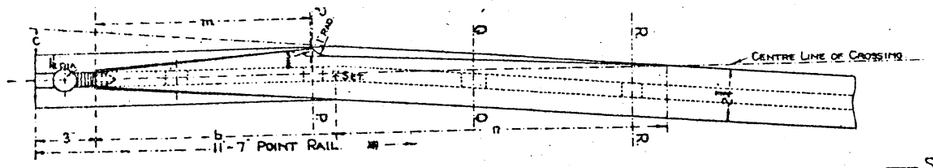

— Point Rail. —

— Details of Crossing Nose —

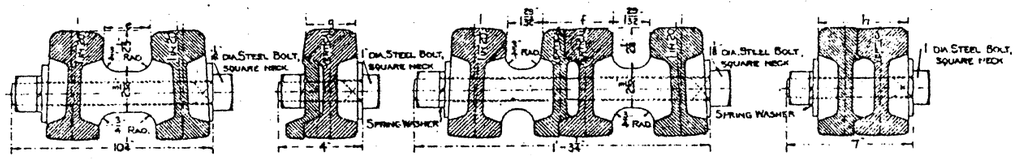

— Section through Neck Bolt — Section P.P. — Section Q.Q. — Section R.R.

Scale:— 1½ Inches = 1 Foot.

Notes.

The Point and Splice Rails to be vertical from the nose of Point Rail to the heel of the Splice. From the latter point each Rail to be gradually canted towards the running side until the full inclination of 1 in 20 from the vertical is reached at a distance of seven feet six inches back from the nose.

The Wing Rails to be canted towards the running side at an inclination of 1 in 20 from the vertical.

The Check Rails to be vertical.

All Bolts and Nuts to conform to the British Standard Specification No. 64 and to be fitted with Spring Washers.

8'-0" Check Rails to be used with these crossings, for Details see Drawing No. 32. (1 in 8 Common Crossing.)

The following Details applicable to all common crossings appear on Drawing No. 32.

"Crossing Nose before and after milling, and fitting of Splice."
"Holding-down Bolt, Saddle and Washer Plate."
"C.I. Washers, also Chair Screw for built-up 'A' Chair Fastenings."

For Details of common crossing Chairs, see Drawing Nos. 36, 37, 38.

For Details of the S.I. Chair, see Drawing No. 4.

For Details of the L.I. Chair, see Drawing No. 6.

The angle of crossing in 1" figures to be stamped on the outside of the web of the Point, Splice and Wing Rails, 2'-4" from fishjoint end.

Dimensions referring to Cross Sections.

Angle of Crossing	e	g	f	h
1 in 6	2 21/64"	2 37/64"	3 35/64"	5¼"
1 in 6½	2 29/64"	2 7/16"	3 43/64"	4 29/32"

Dimensions referring to Details of Crossing Nose.

Angle of Crossing	a	b	c	i	k	l	m	n
1 in 6	11¼"	1'-0 11/16"	1¼"	2 5/8"	11 43/64"	6 11/16"	10 7/8"	1'-4 9/16"
1 in 6½	1'-0 3/4"	1'-1 3/64"	1 15/64"	3 5/32"	1'-0 43/64"	6 9/32"	11 29/32"	1'-5 23/32"

STANDARD RAILWAY EQUIPMENT — PERMANENT WAY.

COMMON CROSSINGS 1 IN 7 & 1 IN 7½.

95 R. B. S. RAIL.

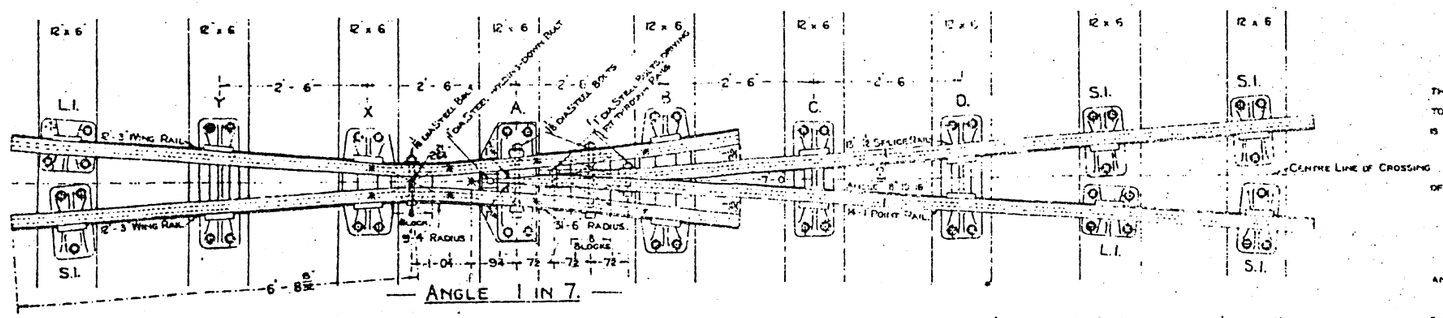

— Angle 1 in 7. —

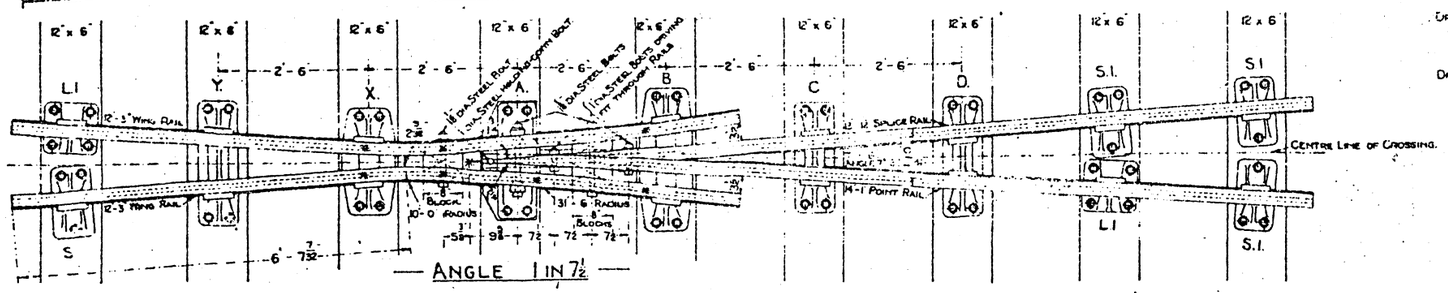

— Angle 1 in 7½ —

Scale:— ½ Inch = 1 Foot

Notes

The Point and Splice Rails to be vertical from the nose of the Point Rail to the heel of the Splice. From the latter Point each Rail to be gradually canted towards the running side until the full inclination of 1 in 20 from the vertical is reached at a distance of ten feet back from the nose.

The Wing Rails to be canted towards the running side at an inclination of 1 in 20 from the vertical.

The Check Rails to be vertical.

All Bolts and Nuts to conform to the British Standard Specification Nº 64 and to be fitted with Spring Washers.

13-0 Check Rails to be used with these crossings, for Details see Drawing Nº 32 (1 in 8 Common Crossing.)

The following Details applicable to all common crossings appear on Drawing Nº 32.

"Crossing Nose before and after milling, and fitting of Splice."
"Holding-down Bolt, Saddle and Washer Plate."
"C.I. Washers, also Chair Screw for built-up 'A' Chair fastenings."

For Details of common crossing Chairs, see Drawing Nos 36, 37, 38

For Details of the S.I Chair, see Drawing Nº 4

For Details of the L.I. Chair, see Drawing Nº 6

The angle of crossing in 1 figures to be stamped on the outside of the web of the Point, Splice and Wing Rails, 2'-4 from fishjoint end.

Dimensions referring to Cross Sections.

Angle of Crossing	c	g	f	h
1 in 7	21/64"	25/64"	5/32"	11/32"
1 in 7½	23/32"	29/32"	9/32"	13/32"

Dimensions referring to Details of Crossing Nose.

Angle of Crossing	a	b	c	i	k	l	m	n
1 in 7	1'-1 1/8"	1'-2 5/64"	1 7/32"	3'-4 3/8"	1'-1 39/64"	3'-7 5/64"	1'-0 11/16"	1'-7 19/64"
1 in 7½	1'-2 1/8"	1'-3 3/64"	1 13/16"	3'-5 3/32"	1'-2 11/64"	3'-7 35/64"	1'-1 19/32"	1'-8 43/64"

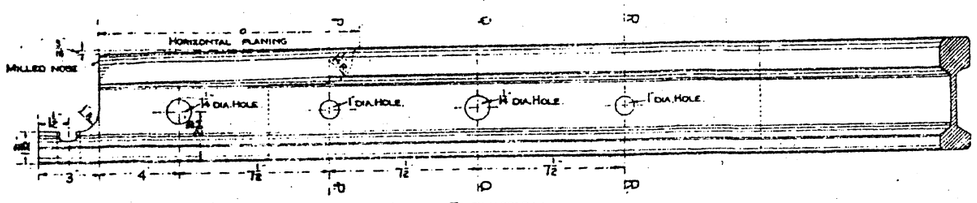

— Elevation. —

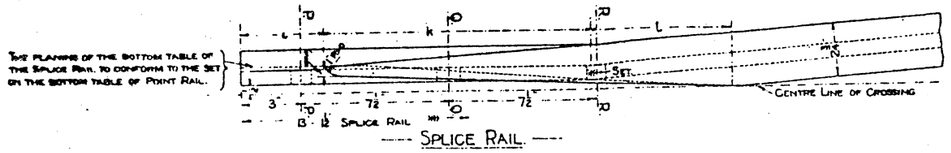

— Splice Rail. —

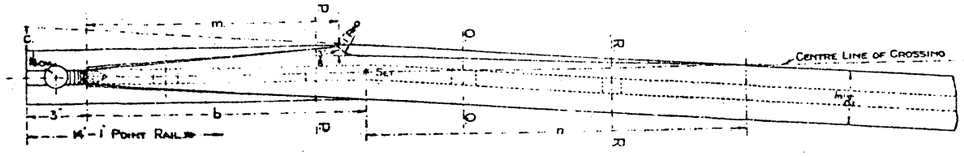

— Point Rail. —

— Details of Crossing Nose. —

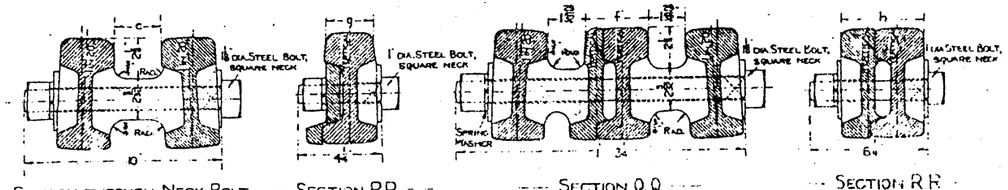

— Section through Neck Bolt. — Section P.P. — Section Q.Q. — Section R.R.

Scale:— 1 Inches = 1 Foot.

STANDARD RAILWAY EQUIPMENT — PERMANENT WAY.

Nº 32.

COMMON CROSSING 1 IN 8.

95 R. B. S. RAIL.

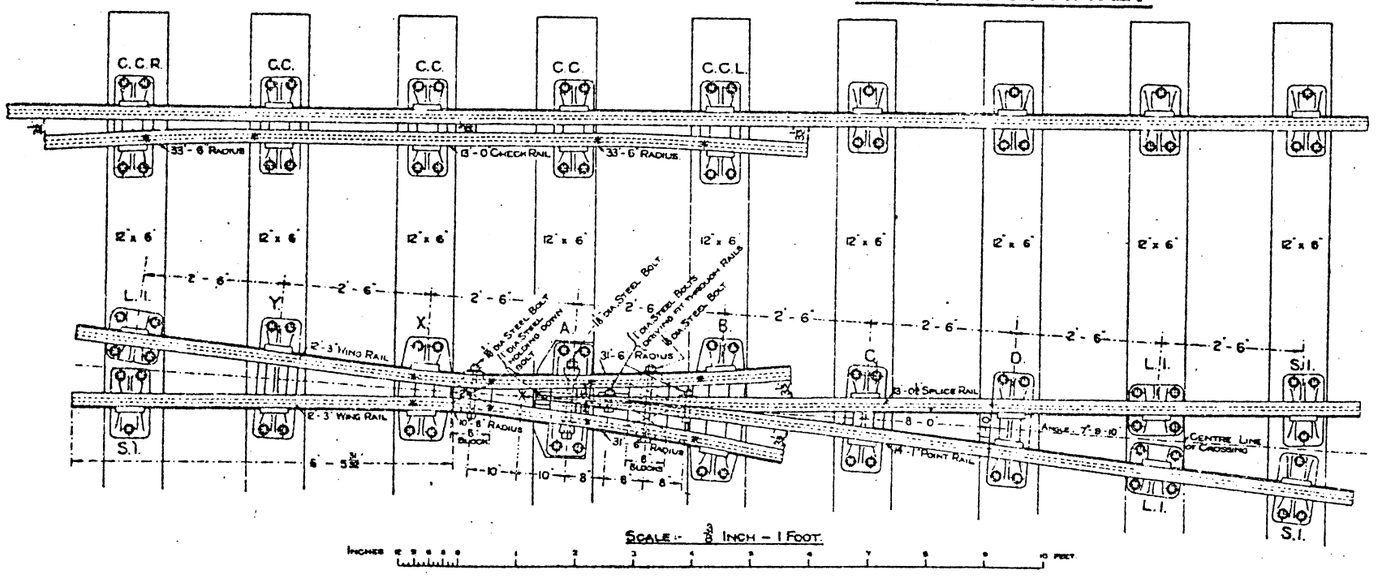

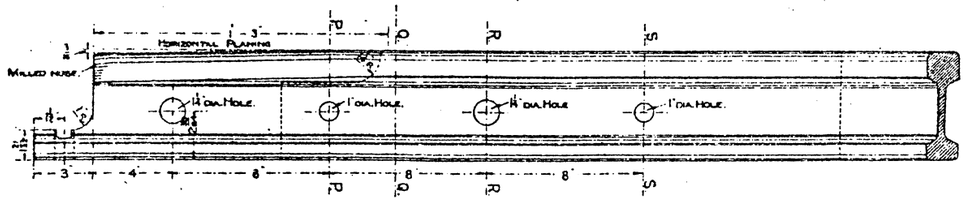

— ELEVATION. —

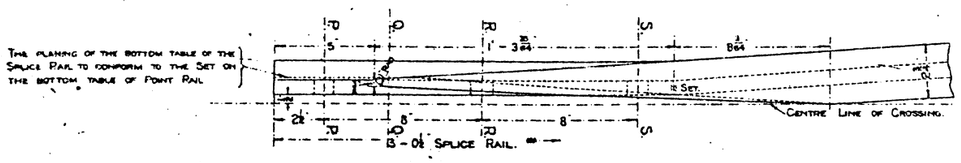

— SPLICE RAIL —

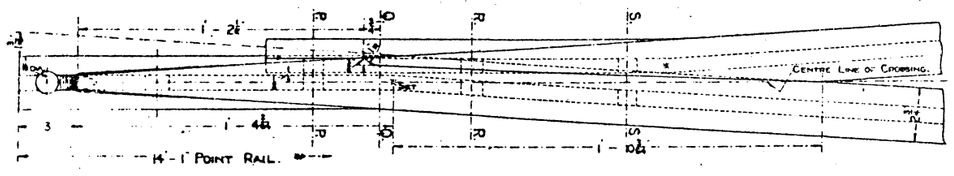

— POINT AND SPLICE RAILS. —

— DETAILS OF CROSSING NOSE. —

SCALE :- 1½ INCHES = 1 FOOT.

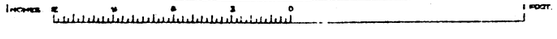

NOTES.

THE POINT AND SPLICE RAILS TO BE VERTICAL FROM THE NOSE OF THE POINT RAIL TO THE HEEL OF THE SPLICE. FROM THE LATTER POINT EACH RAIL TO BE GRADUALLY CANTED TOWARDS THE RUNNING SIDE UNTIL THE FULL INCLINATION OF 1 IN 20 FROM THE VERTICAL IS REACHED AT A DISTANCE OF TEN FEET BACK FROM THE NOSE.

THE WING RAILS TO BE CANTED TOWARDS THE RUNNING SIDE AT AN INCLINATION OF 1 IN 20 FROM THE VERTICAL.

THE CHECK RAILS TO BE VERTICAL.

ALL BOLTS AND NUTS TO CONFORM TO THE BRITISH STANDARD SPECIFICATION Nº 64 AND TO BE FITTED WITH SPRING WASHERS

FOR DETAILS OF COMMON CROSSING CHAIRS, SEE DRAWING Nos 36, 37, 38.

FOR DETAILS OF THE S.I. CHAIR, SEE DRAWING Nº 4.

FOR DETAILS OF THE L.I. CHAIR, SEE DRAWING Nº 6

THE ANGLE OF CROSSING IN 1" FIGURES TO BE STAMPED ON THE OUTSIDE OF THE HEEL OF THE POINT, SPLICE AND WING RAILS, 2'-4" FROM FISHJOINT END.

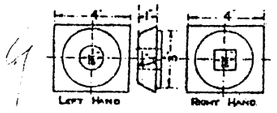

— C.I. WASHERS FOR 1" BOLTS —

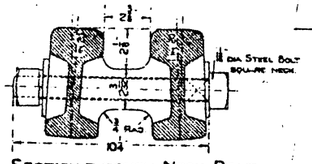

— SECTION THROUGH NECK BOLT. —

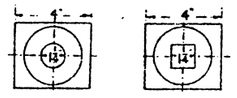

— C.I. WASHERS FOR 1⅛ BOLTS. —

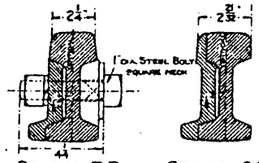

— SECTION P.P. — SECTION Q.Q. —

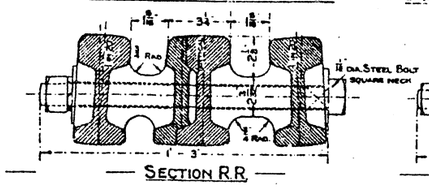

— SECTION R.R. —

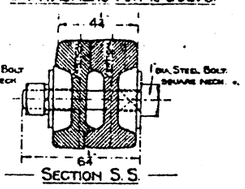

— SECTION S.S. —

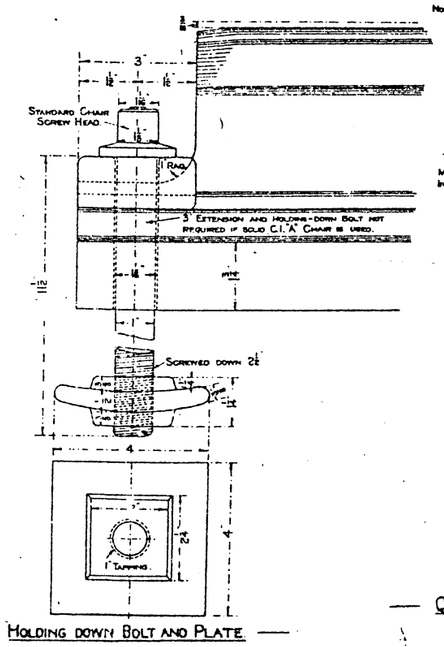

— HOLDING DOWN BOLT AND PLATE —

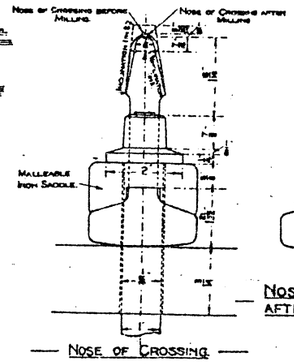

— NOSE OF CROSSING —

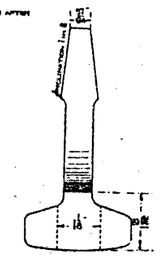

— NOSE OF CROSSING AFTER SIDE PLANING —

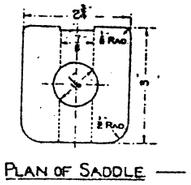

— PLAN OF SADDLE —

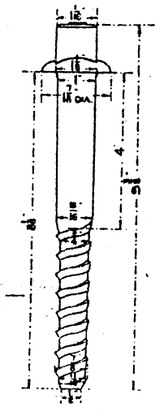

— STEEL CHAIR SCREW. FOR 'A' CHAIR FASTENINGS. —

— QUARTER FULL SIZE. —

STANDARD RAILWAY EQUIPMENT — PERMANENT WAY.

COMMON CROSSINGS 1 IN 9 & 1 IN 10.

95 R. B.S. RAIL.

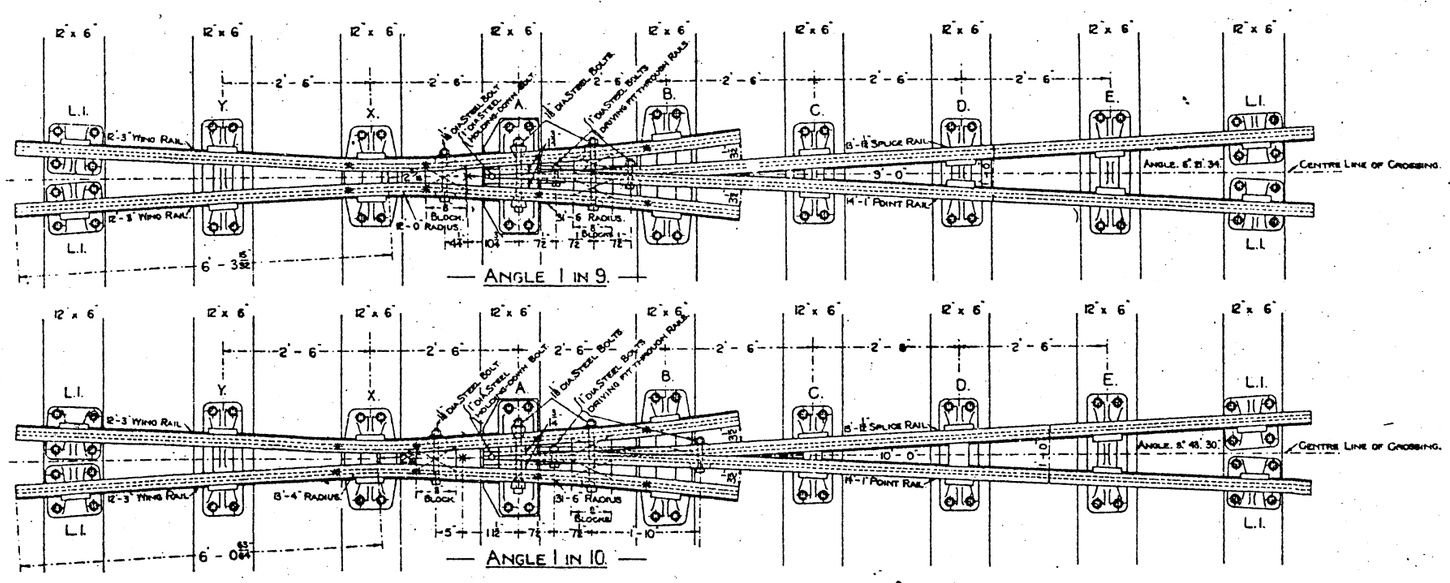

Scale:- ¾ Inch = 1 Foot.

Notes

The Point and Splice Rails to be vertical from the nose of the Point Rail to the heel of the Splice. From the latter point each Rail to be gradually canted towards the running side until the full inclination of 1 in 20 from the vertical is reached at a distance of twelve feet six inches back from the nose.

The Wing Rails to be canted towards the running side at an inclination of 1 in 20 from the vertical.

The Check Rails to be vertical.

All Bolts and Nuts to conform to the British Standard Specification Nº 64 and to be fitted with Spring Washers.

8'-0" Check Rails to be used with these crossings, for Details see Drawing Nº 32. (1 in 8 common crossing.)

The following Details applicable to all common crossings appear on Drawing Nº 32.

"Crossing Nose before and after milling, and fitting of Splice."
"Holding-down Bolt, Saddle and Washer Plate."
"C.I. Washers, also Chair Screw for built up 'A' Chair fastenings."

For Details of common crossing chairs, see Drawing Nºs 36, 37, 38

For Details of the L.I. Chair, see Drawing Nº 6.

The angle of crossing in figures to be stamped on the outside of the Point, Splice and Wing Rails, 2'-4" from fish-joint end.

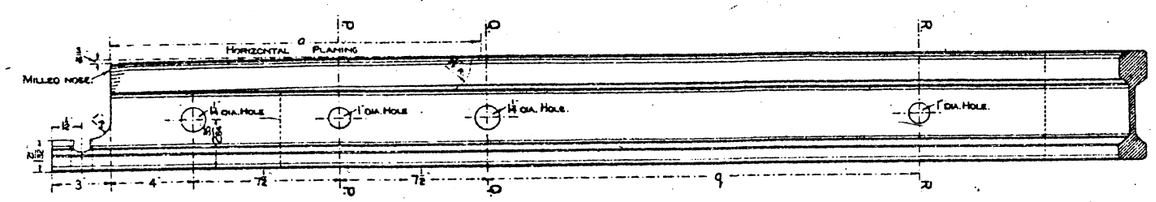

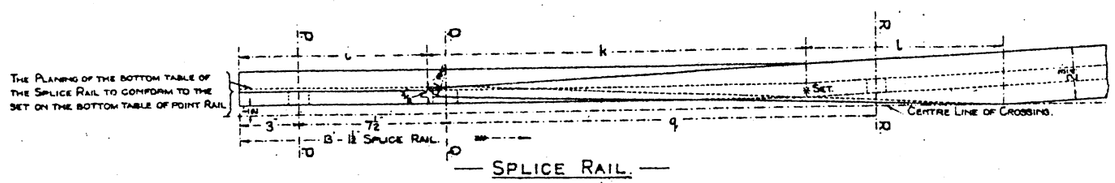

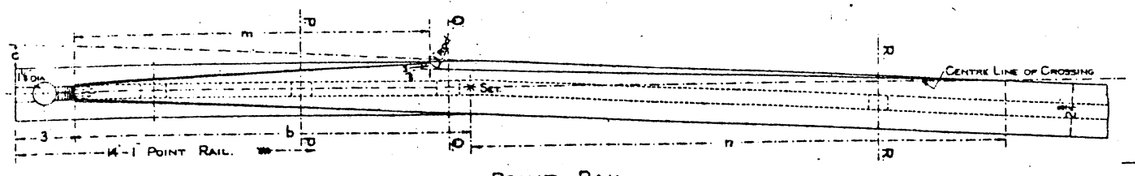

— Details of Crossing Nose —

Scale:- 1½ Inches = 1 Foot.

Dimensions referring to Cross Sections

Angle of Crossing.	e	g	f	h
1 in 9	5/32"	2 3/32"	2 29/64"	3 11/64"
1 in 10.	3/16"	1 9/32"	2 11/32"	4 17/32"

Dimensions referring to Details of Crossing Nose.

Angle of Crossing.	a	b	c	i	k	l	m	n	q
1 in 9.	1'-4 5/8"	1'-6 1/32"	1 11/64"	7 9/16"	1'-5 5/32"	9 9/32"	1'-4 5/16"	2'-0 25/32"	7½"
1 in 10.	1'-6 3/4"	1'-8 1/32"	1 5/32"	9 3/8"	1'-7 5/32"	10 1/32"	1'-6 1/8"	2'-3 17/32"	1'-10"

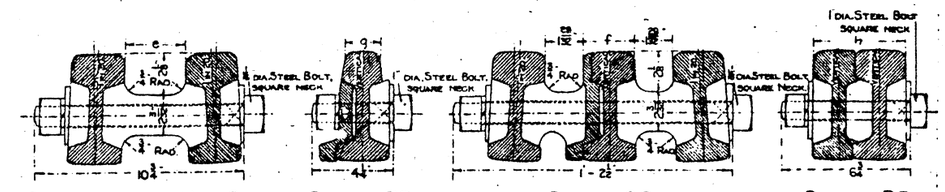

Scale:- 1½ Inches = 1 Foot.

STANDARD RAILWAY EQUIPMENT — PERMANENT WAY.

COMMON CROSSING 1 IN 11.

95R. B.S. RAIL.

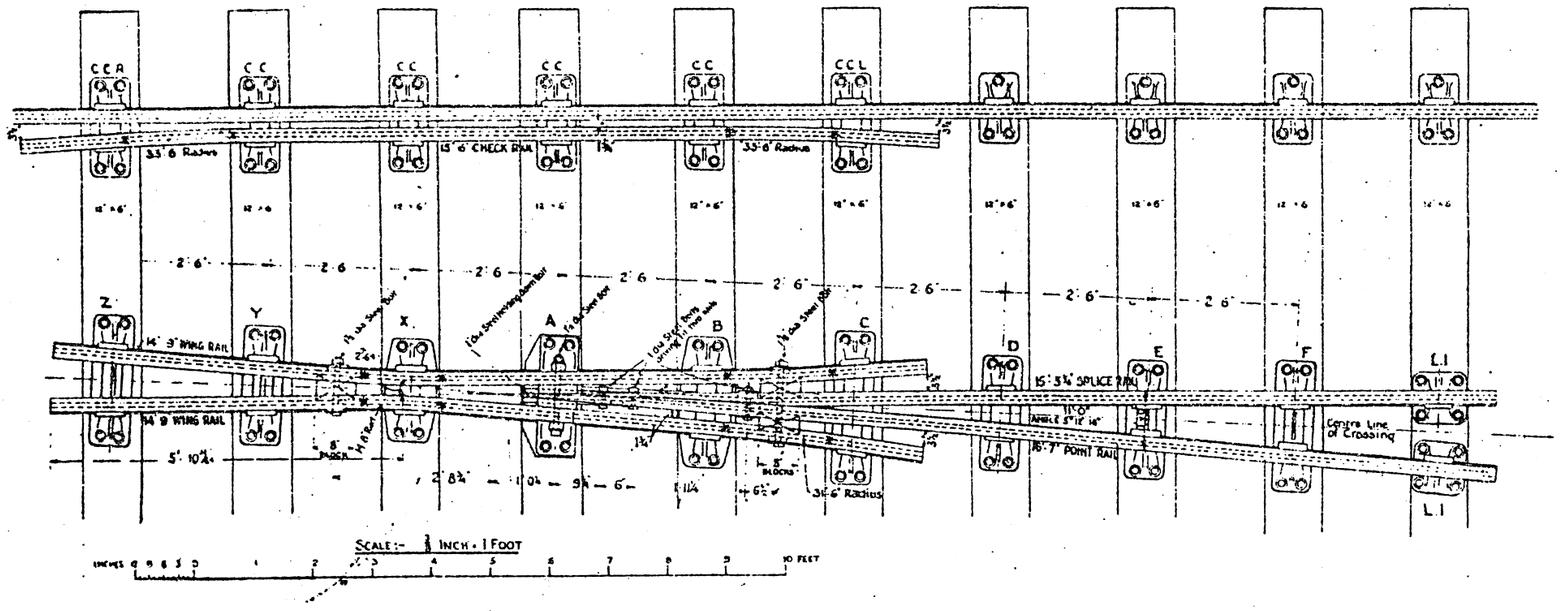

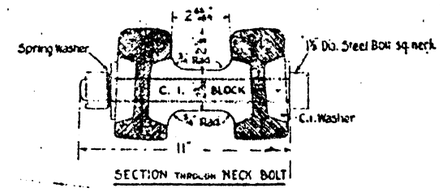

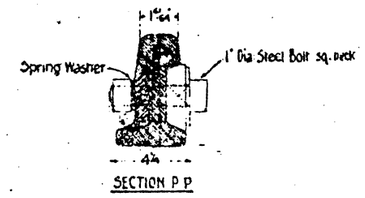

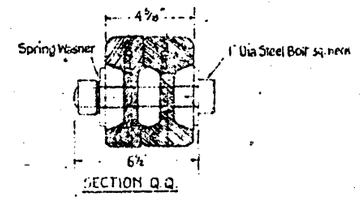

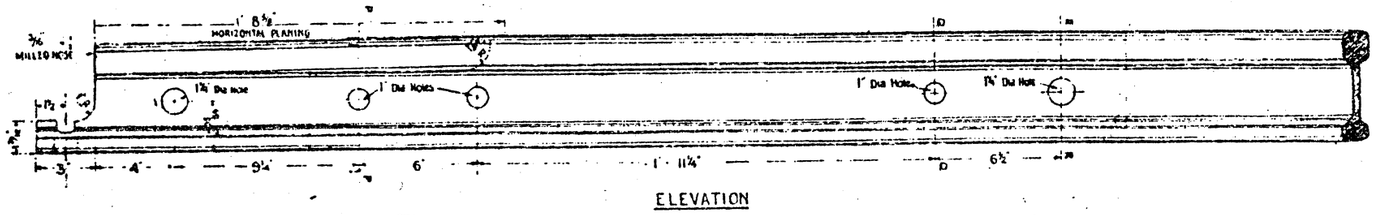

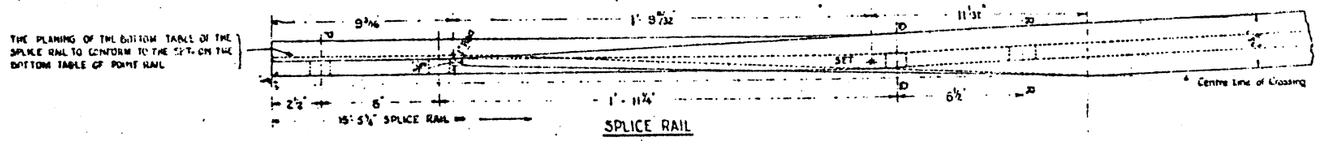

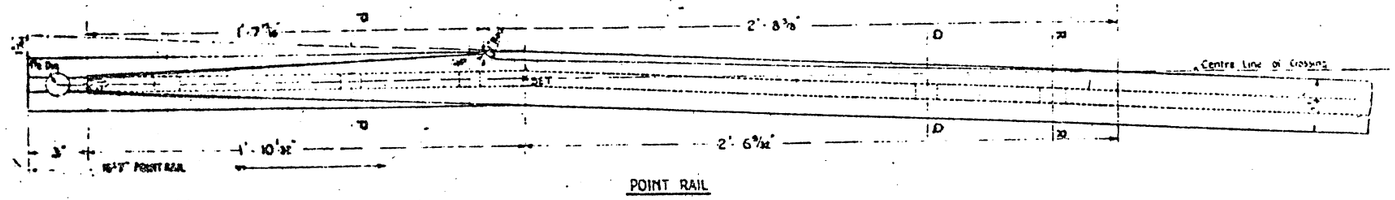

DETAILS OF CROSSING NOSE

SCALE :- 1½ INCHES = 1 FOOT

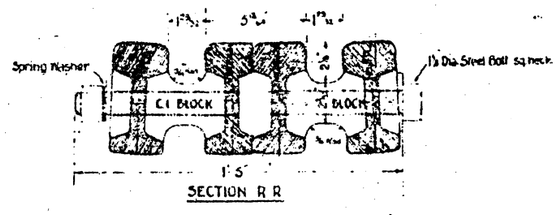

NOTES

The point and splice rails to be vertical from the nose of the point rail to the heel of the splice. From the latter point each rail to be gradually canted towards the running side until the full inclination of 1 in 20 from the vertical is reached at a distance of twelve feet back from the nose

The wing rails to be canted towards the running side at an inclination of 1 in 20 from the vertical

The check rails to be vertical

All bolts and nuts to conform to the British Standard Specification No 64 and to be fitted with spring washers

The following details applicable to all common crossings appear on Drawing No 32.

"Crossing nose before and after milling, and fitting of splice"
"Holding-down bolt, saddle and washer plate"
"C I washers, also chair screw for built-up 'A' chair fastenings"

For details of common crossing chairs, see Drawing No 33
" CC., CCR & CCL " " " 38
For details of the S1 chair, see Drawing No 4.

For details of the L1 chair, see Drawing No 6

The angle of crossing in 1' figures to be stamped on the outside of the web of the point, splice and wing rails 2' 4" from fishjoint end

STANDARD RAILWAY EQUIPMENT — PERMANENT WAY.

CHAIRS FOR 1 IN 11 COMMON CROSSING.

95R, B. S. RAIL.

BUILT UP A CHAIR

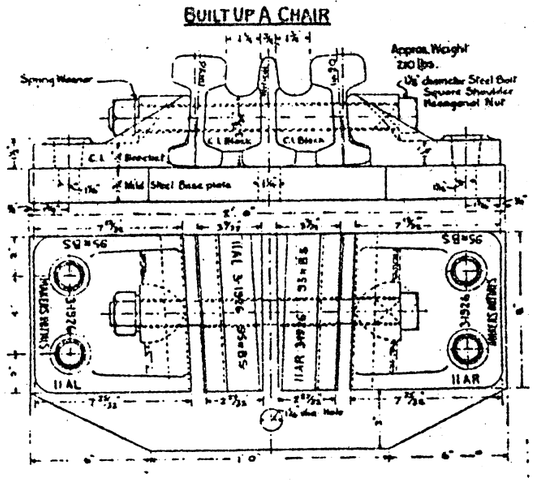

SOLID CAST IRON A CHAIR

Note: When this chair is used the 3" extension of the Foot Rail for Holding down bolt is not required.

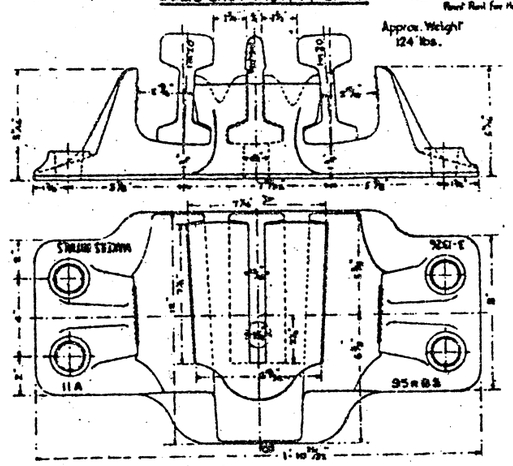

SECTION A-B

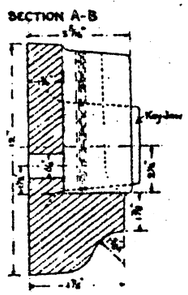

B CHAIR

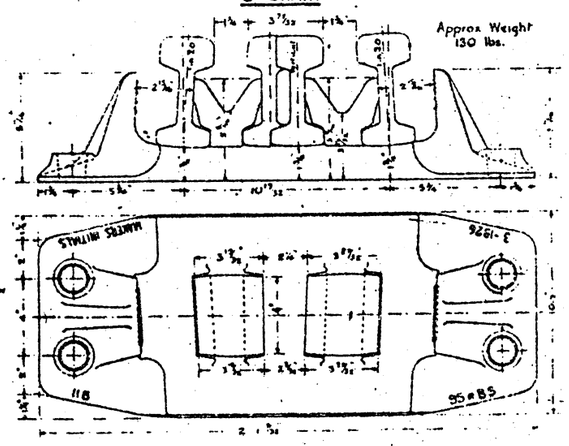

C CHAIR

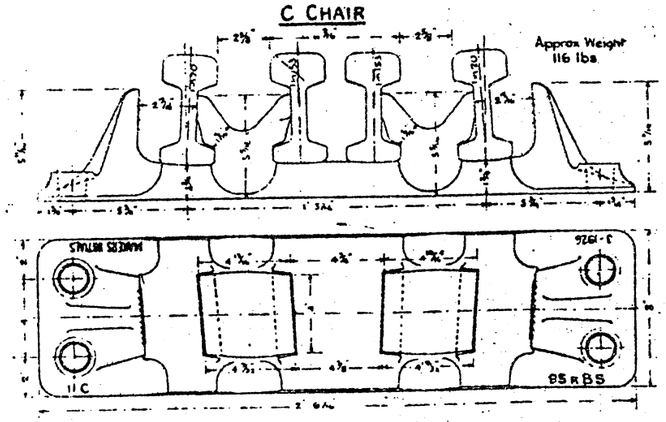

D CHAIR

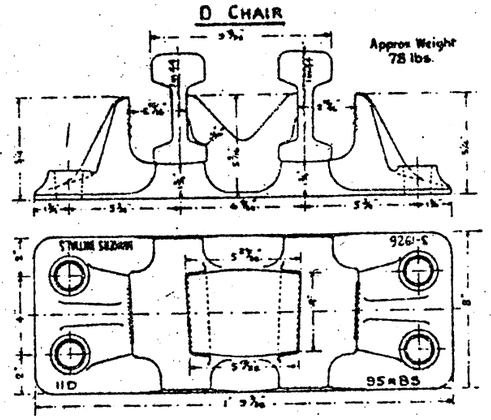

E & F CHAIRS

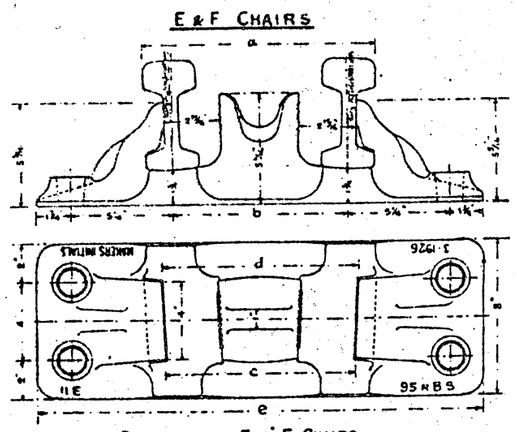

DIMENSIONS OF E & F CHAIRS

CHAIR	a	b	c	d	e	APPROX. WEIGHT	VARYING INCLINATION
E	1'-0 3/32"	8 7/8"	9 23/64"	10 9/32"	1'-10 7/8"	85 lb	1 IN 26
F	1'-2 3/16"	11 1/2"	1'-0 13/32"	1'-0 33/64"	2'-1 7/8"	92 "	1 IN 20

X CHAIR

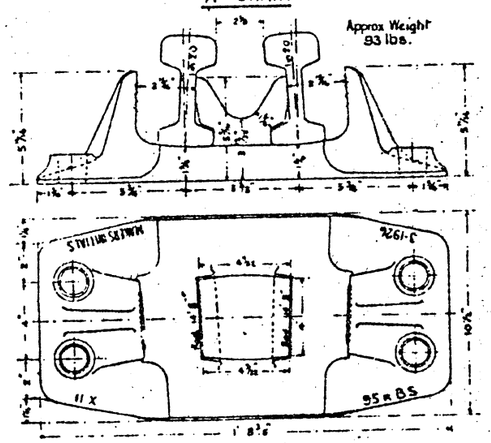

Y & Z CHAIRS

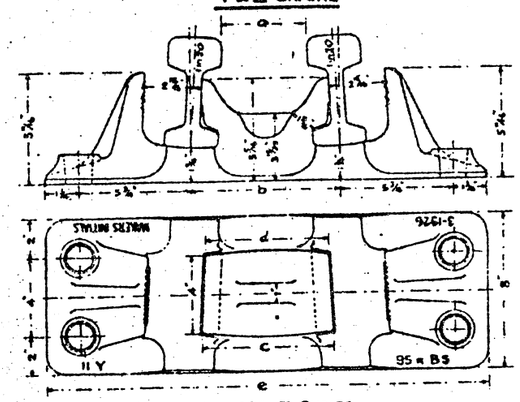

DIMENSIONS OF Y & Z CHAIRS.

CHAIR	a	b	c	d	e	APPROX. WEIGHT
Y	4 7/32"	7 7/32"	6 7/16"	6 3/16"	1'-10 13/32"	81 lb
Z	7 3/16"	10 5/16"	5 9/32"	5 3/32"	2'-1 3/16"	90 "

NOTES

The rail jaw to conform to the profile of the rail jaw of the S1 chair (Drawing Nº 41) and the key jaw details are shown on Drawing Nº 38 both jaws being subject to the essential difference in the horizontal inclination necessitated by the angle of the crossing and subject also, in the case of the key jaws of the D chair, to the height being 5 1/4 instead of 5 7/16

For details of C.I. Brackets for built up A chair see Drawing Nº 36

The horizontal dimensions appearing in the elevation drawings are those obtaining in the centre of the chairs, except in the case of A chairs which latter are taken not at the centre of the chair but at the point of the crossing

The holes in the chair bases to take the standard ferrule and screw.

The number of the crossing to be cast on each special chair, in front of the chair letter, the date of manufacture, makers initials and weight of rail designed for are also to be cast on each chair

SCALE :- 1 1/2 INCHES = 1 FOOT

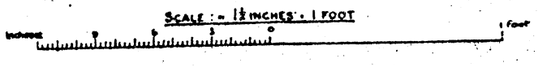

STANDARD RAILWAY EQUIPMENT — PERMANENT WAY.

COMMON CROSSING 1 IN 12.

95 R. B. S. RAIL.

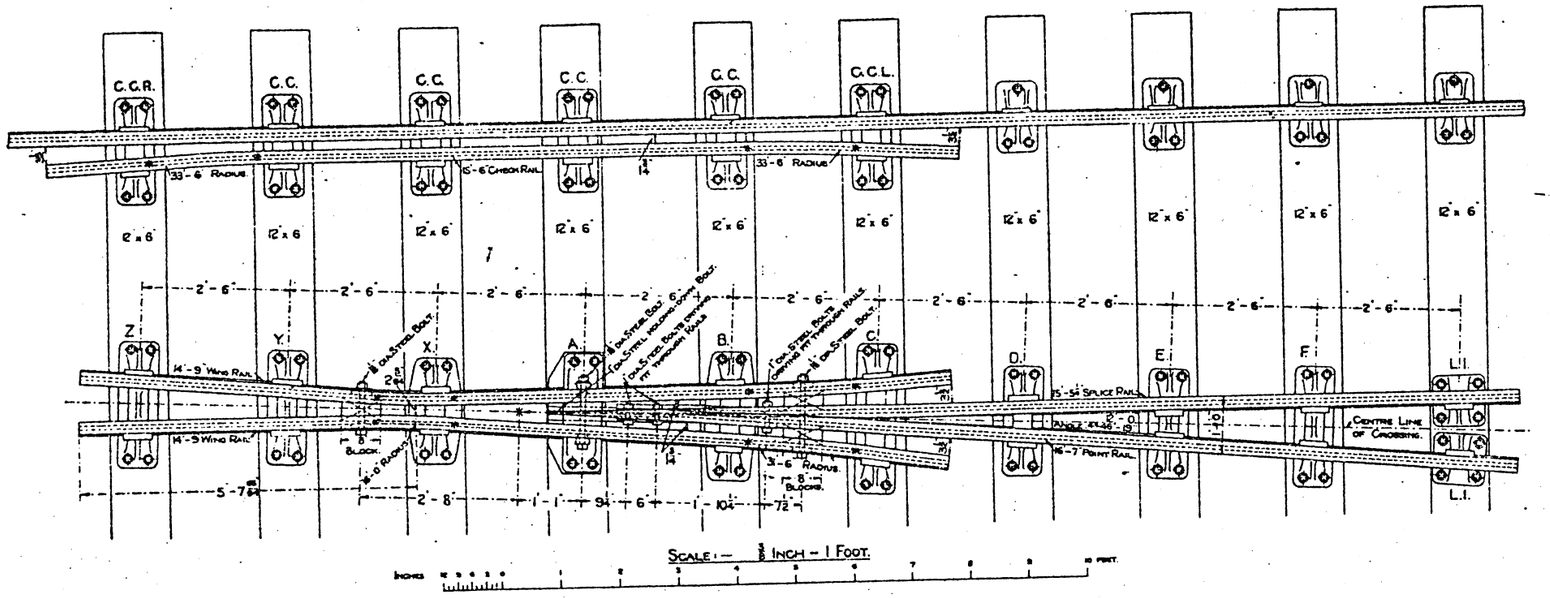

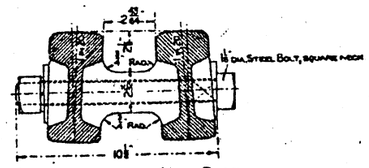

— Section through Neck Block. —

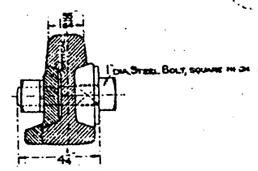

— Section P.P. —

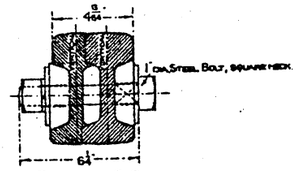

— Section Q.Q. —

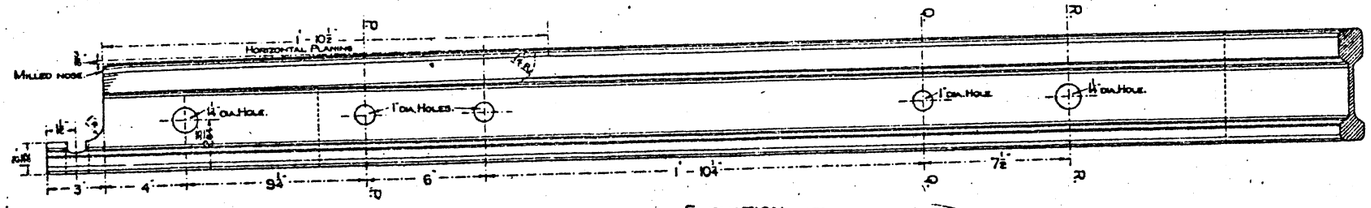

— Elevation. —

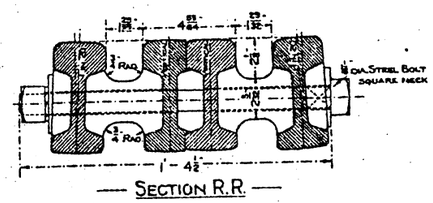

— Section R.R. —

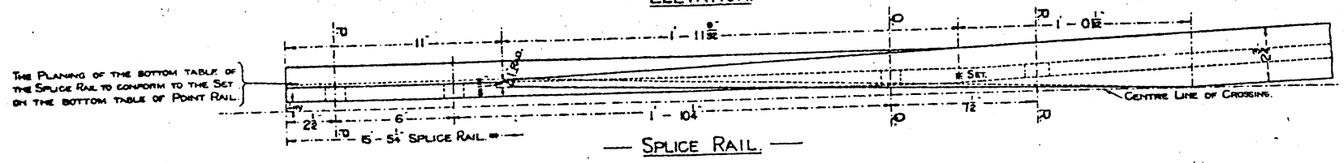

— Splice Rail. —

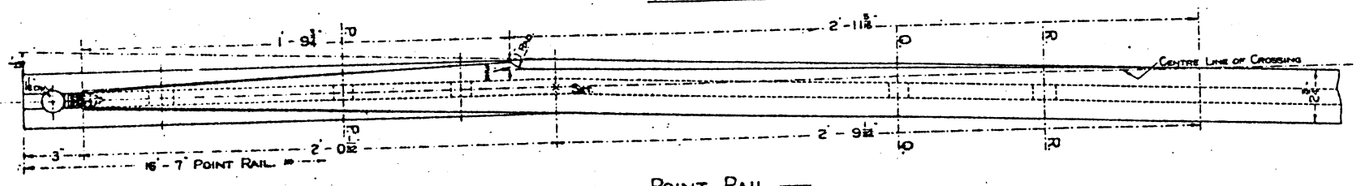

— Point Rail. —

— Details of Crossing Nose. —

Scale:- 1½ Inches - 1 Foot.

Notes.

The Point and Splice Rails to be vertical from the nose of the Point Rail to the heel of the Splice. From the latter point each Rail to be gradually canted towards the running side until the full inclination of 1 in 20 from the vertical is reached at a distance of fifteen feet back from the nose.

The Wing Rails to be canted towards the running side at an inclination of 1 in 20 from the vertical.

The Check Rails to be vertical.

All Bolts and Nuts to conform to the British Standard Specification Nº 64. and to be fitted with Spring Washers.

The following Details applicable to all common crossings appear on Drawing Nº 32.

"Crossing Nose before and after milling, and fitting of Splice."
"Holding-down Bolt, Saddle and Washer Plate."
"C.I. Washers also Chair Screw for built-up 'A' Chair fastenings."

For Details of common crossing Chairs, see Drawing Nºs 36, 37, 38

For Details of the S.I. Chair, see Drawing Nº 4.

For Details of the L.I. Chair, see Drawing Nº 6.

The angle of crossing in 1" figures to be stamped on the outside of the Web of the Point, Splice and Wing Rails, 2'-4" from fishjoint end.

STANDARD RAILWAY EQUIPMENT — PERMANENT WAY. Nº 34A

COMMON CROSSING 1 IN 14.

95R. B.S. RAIL.

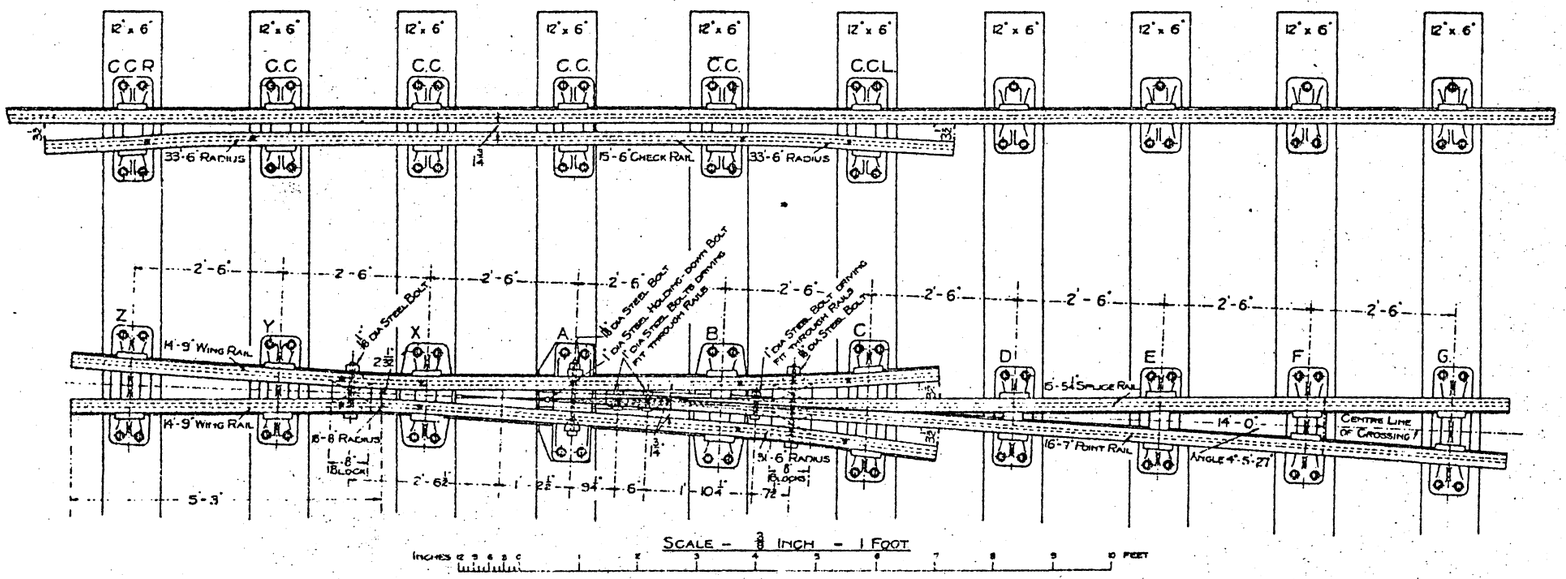

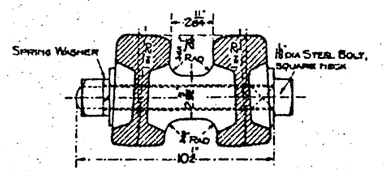

Section through Neck Lock

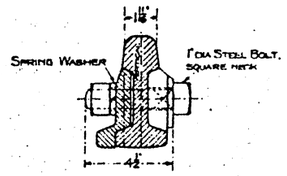

Section P.P.

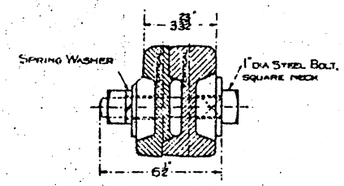

Section Q.Q.

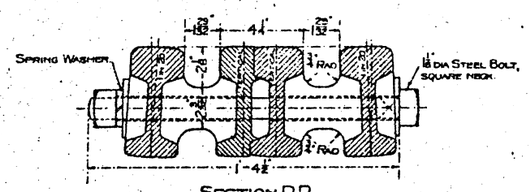

Section R.R.

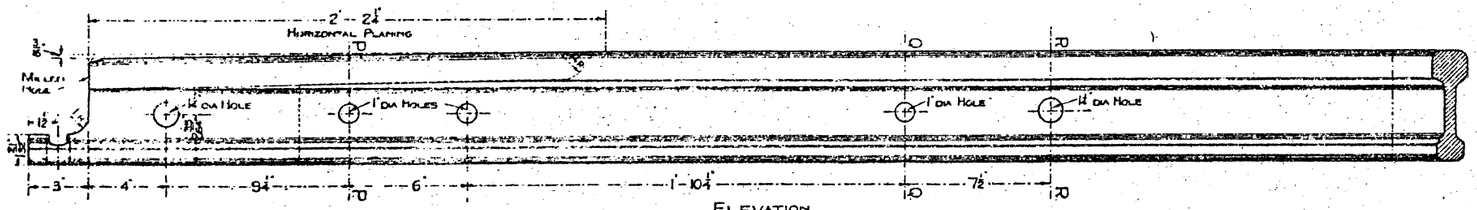

Elevation.

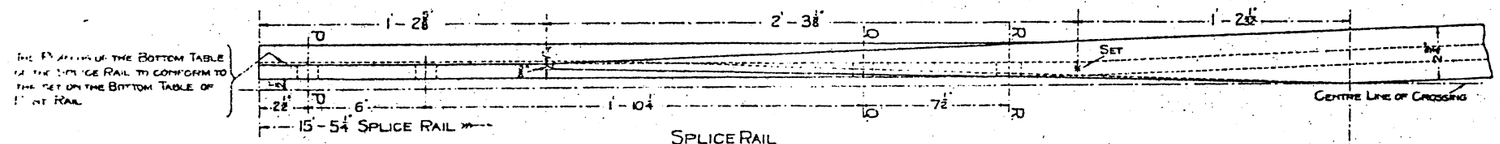

Splice Rail.

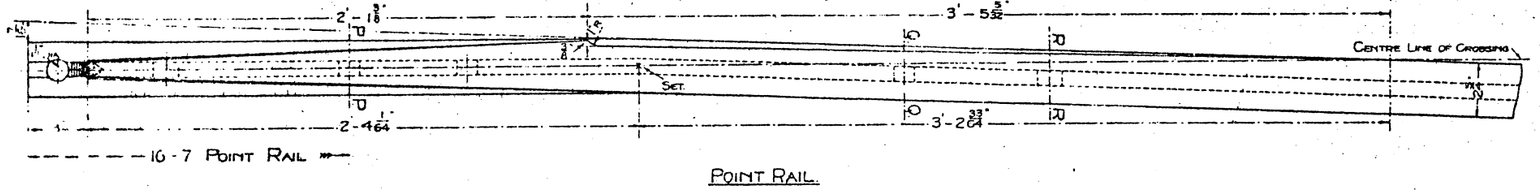

Point Rail.

— Details of Crossing Nose. —

Scale :- 1½ Inches - 1 Foot.

Inches 12 11 10 9 8 7 6 5 4 3 2 1 0 1 Foot

Notes.

The Point and Splice Rails to be vertical from the nose of the Point Rail to the heel of the Splice. From the latter point each Rail to be gradually canted towards the running side until the full inclination of 1 in 20 from the vertical is reached at a distance of twelve feet back from the nose.

The Wing Rails to be canted towards the running side at an inclination of 1 in 20 from the vertical.

The Check Rails to be vertical.

All Bolts and Nuts to conform to the British Standard Specification Nº 64 and to be fitted with Spring Washers.

The following Details applicable to all common crossings appear on Drawing Nº 32.

"Crossing nose before and after milling and fitting of Splice."
"Holding-down Bolt, Saddle and Washer Plate."
"C.I Washers, also chair screw for built up "A" chair fastenings."

For Details of common crossing Chairs see Drawing Nº 34B.
For Details of CC, CCR, and CCL, Chairs see Drawing Nº 38.
For Details of S.I Chair see Drawing Nº 4.

The angle of crossing in 1" figures to be stamped on the outside of the web of the Point, Splice and Wing Rails 2'-4" from fishjoint end.

STANDARD RAILWAY EQUIPMENT — PERMANENT WAY.

Nº 34B

CHAIRS FOR 1 IN 14 COMMON CROSSING.

95 R. B.S. RAIL.

BUILT UP A CHAIR.

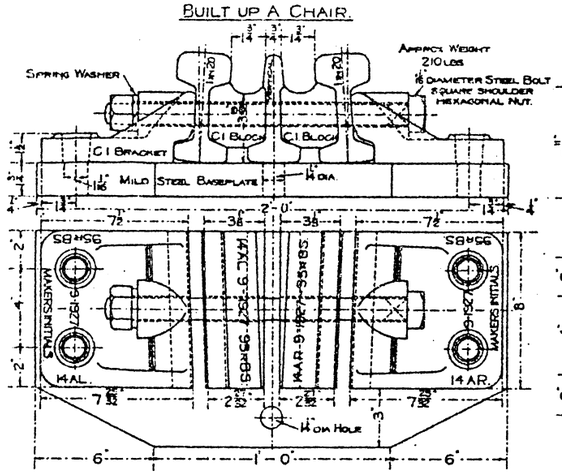

SOLID CAST IRON A CHAIR.

Note When this chair is used the 3" extension of the Point Rail for holding-down bolt is not required.

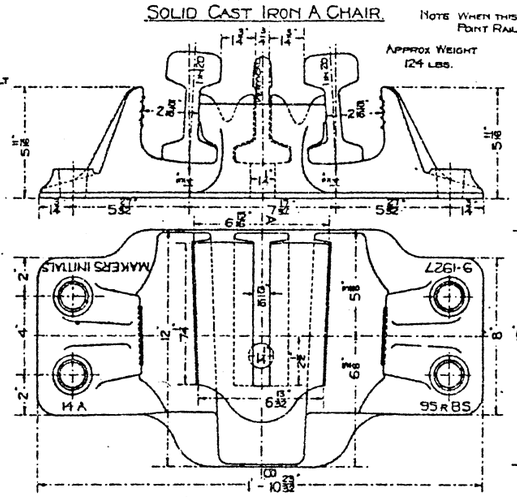

SECTION A B.

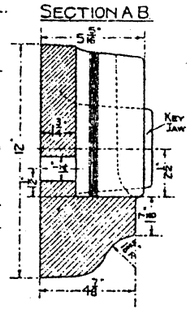

B CHAIR.

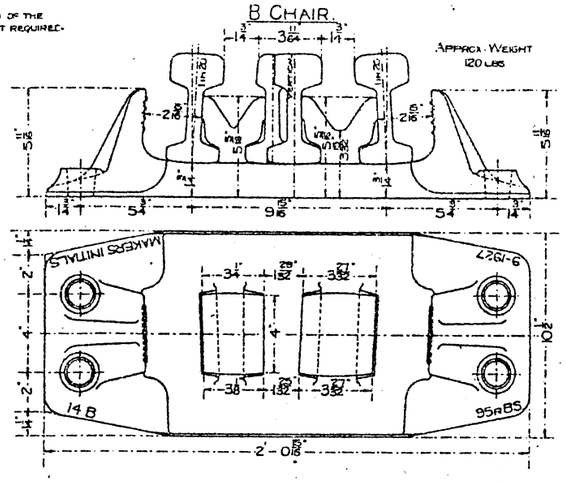

C CHAIR.

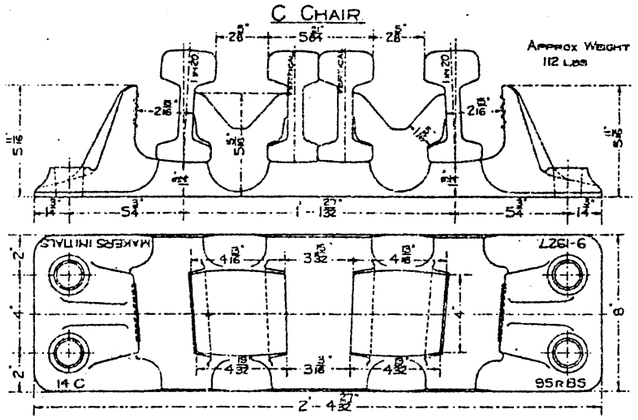

D & E CHAIRS

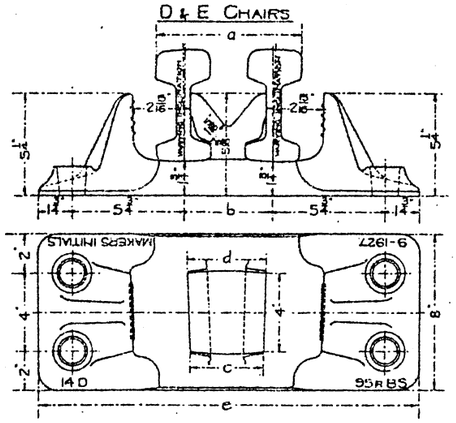

F & G CHAIRS.

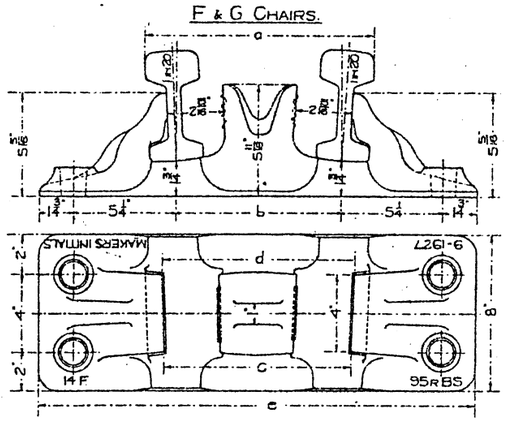

DIMENSIONS OF D & E CHAIRS.

Chair	a	b	c	d	e	Approx Weight	Varying Inclination
D	7 8/32"	4 7/32"	3 25/32"	4 1/32"	1'-7 17/32"	71 Lbs	1 in 56
E	9 35/64"	6 15/32"	5 27/32"	6 1/8"	1'-9 15/32"	77 Lbs	1 in 27

DIMENSIONS OF F & G CHAIRS.

Chair	a	b	c	d	e	Approx Weight
F	11 3/4"	8 1/2"	9 7/16"	9 3/4"	1'-10 1/2"	83 Lbs
G	1'-1 27/64"	10 5/8"	11 29/32"	11 7/8"	2'-0 5/8"	87 Lbs

DIMENSIONS OF Y & Z CHAIRS.

Chair	a	b	c	d	e	Approx Weight
Y	3 1/4"	6 1/2"	5 5/8"	5 9/32"	1'-9 1/2"	77 Lbs
Z	5 25/64"	8 21/32"	7 11/16"	7 13/32"	1'-11 21/32"	85 Lbs

X CHAIR.

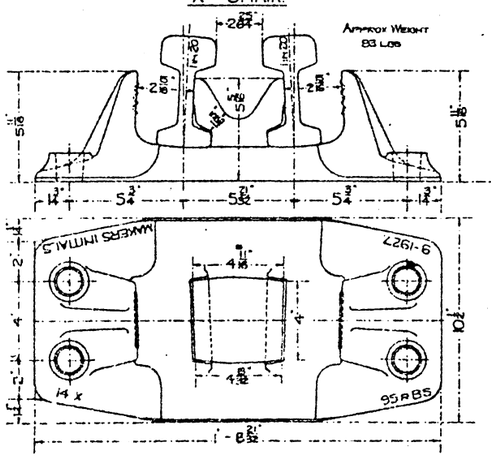

Y & Z CHAIRS.

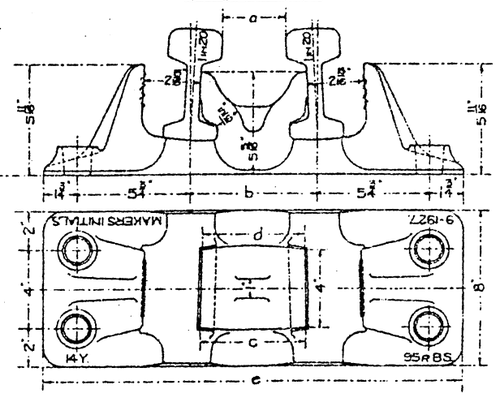

NOTES.

The Rail Jaw of all crossing Chairs to conform to the profile of the Rail Jaw of the S.I. Chair (Drawing Nº 4) subject, however, to the essential difference in the horizontal inclination necessitated by the angle of the crossing.

The Details of the Key Jaw are shewn on Drawing Nº 38 and this drawing is typical of Key Jaws for all crossing Chairs, subject to the essential difference in the horizontal inclination necessitated by the angle of the crossing and subject also to the height being 5¼" instead of 5 11/16" in the case of the "D" and "E" Chairs.

The Details of the C I Brackets for the built up A Chair are shewn on Drawing Nº 36 and this drawing is typical of the Brackets for this crossing, subject to the essential difference in the horizontal inclination necessitated by the angle of the crossing.

The horizontal dimensions appearing in the elevation drawings are those obtaining in the centre of the Chair, excepting in the case of the A Chairs which latter are taken not at the Chair but at the point of the crossing.

The Holes in the Chair Bases to take the Standard Ferrule and Screw.

The number of the crossing to be cast on each Special Chair in front of the Chair letter to indicate for which angle of crossing it has been designed. The date of manufacture, maker's initials, and weight of Rail designed for, are also to be cast on each Chair.

Scale:- 1½ Inches = 1 Foot.

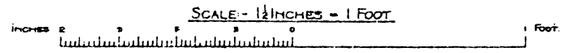

STANDARD RAILWAY EQUIPMENT — PERMANENT WAY.

COMMON CROSSING 1 IN 16.

95 R. B. S. RAIL.

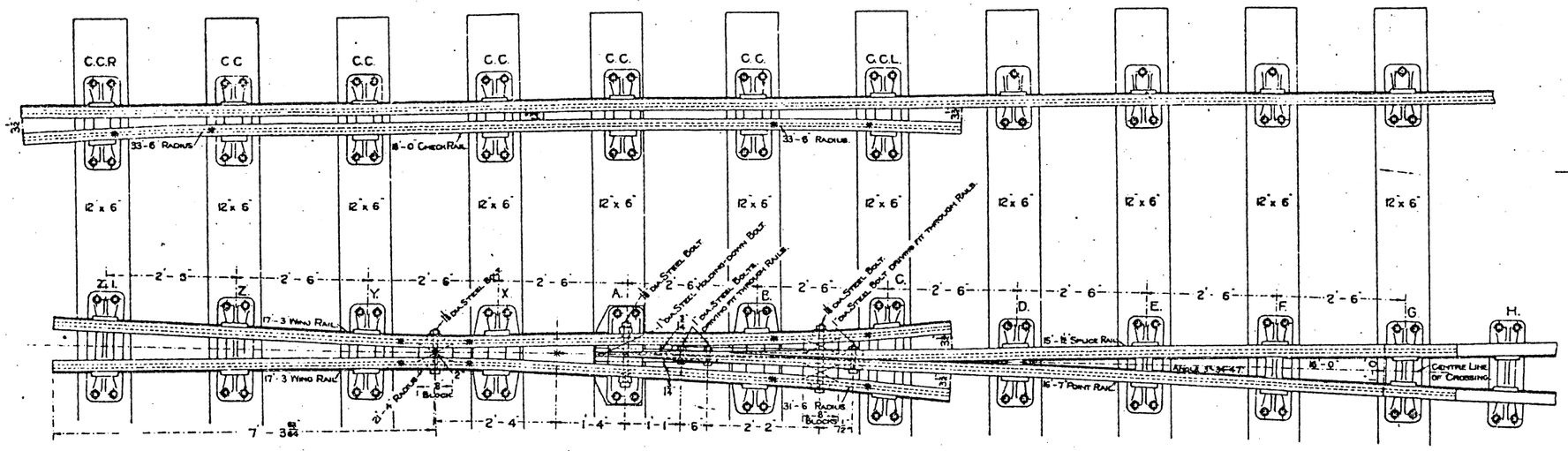

Scale:- 3/8 Inch - 1 Foot

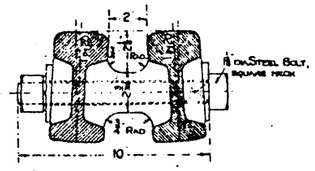

— Section Through Neck —

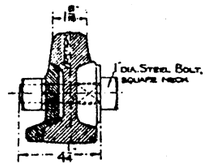

— Section P.P —

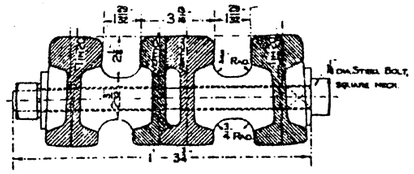

— Section Q.Q —

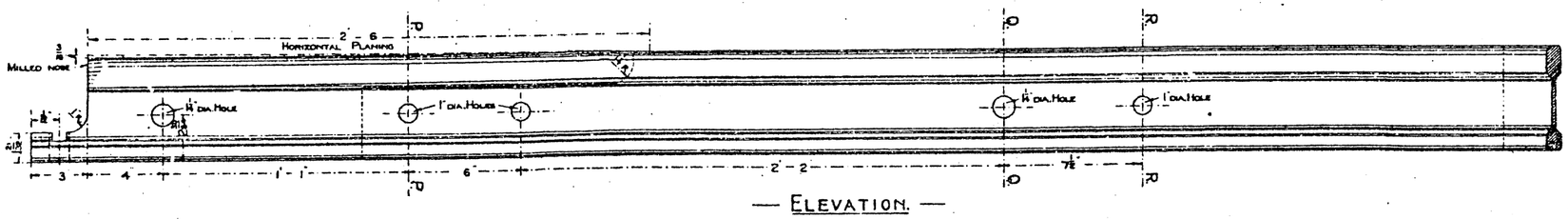

— Elevation —

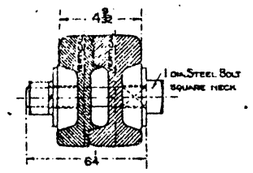

— Section R.R —

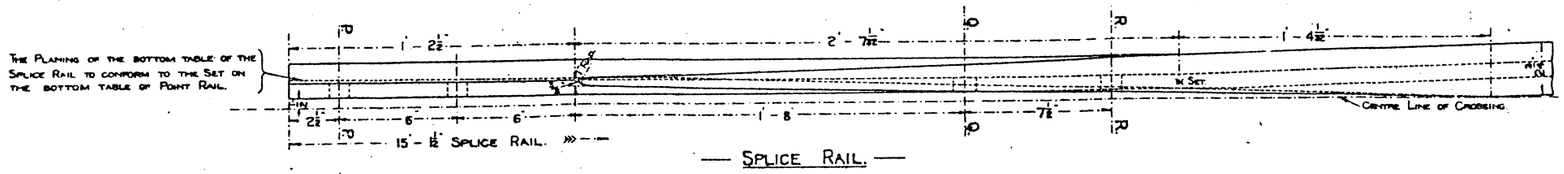

— Splice Rail —

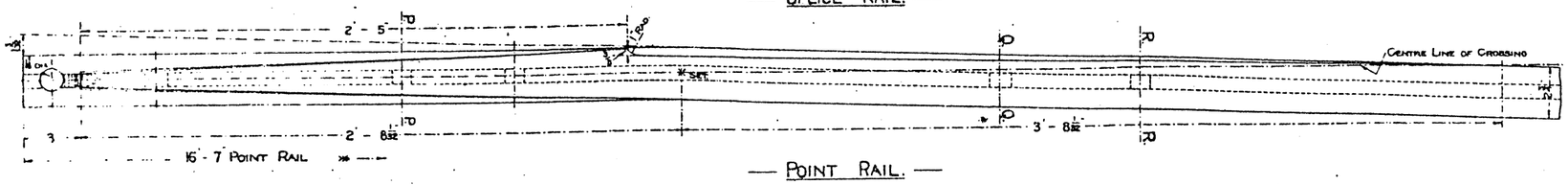

— Point Rail —

— Details of Crossing Nose —

Scale:- 1½ Inches - 1 Foot

Notes.

The Point and Splice Rails to be vertical from the nose of the Point Rail to the heel of the Splice. From the latter point each Rail to be gradually canted towards the running side until the full inclination of 1 in 20 from the vertical is reached at a distance of fifteen feet back from the nose.

The Wing Rails to be canted towards the running side at an inclination of 1 in 20 from the vertical.

The Check Rails to be vertical.

All Bolts and Nuts to conform to the British Standard Specification Nº 64 and to be fitted with Spring Washers.

The following Details applicable to all common crossings appear on Drawing Nº 32.

- Crossing nose before and after milling, and fitting of Splice.
- Holding down Bolt, Saddle and Washer Plate.
- C.I. Washers, also Chair Screw for built up 'A' Chair fastenings.

For Details of common crossing chairs, see Drawing Nºs 36, 37, 38.

For Details of the S.I. Chair, see Drawing Nº 4.

The angle of crossing in 1" figures to be stamped on the outside of the web of the Point, Splice and Wing Rails, 2'-6" from fishpoint end.

STANDARD RAILWAY EQUIPMENT — PERMANENT WAY.

No. 35A.

COMMON CROSSING 1 IN 20.

95 R. B. S. RAIL

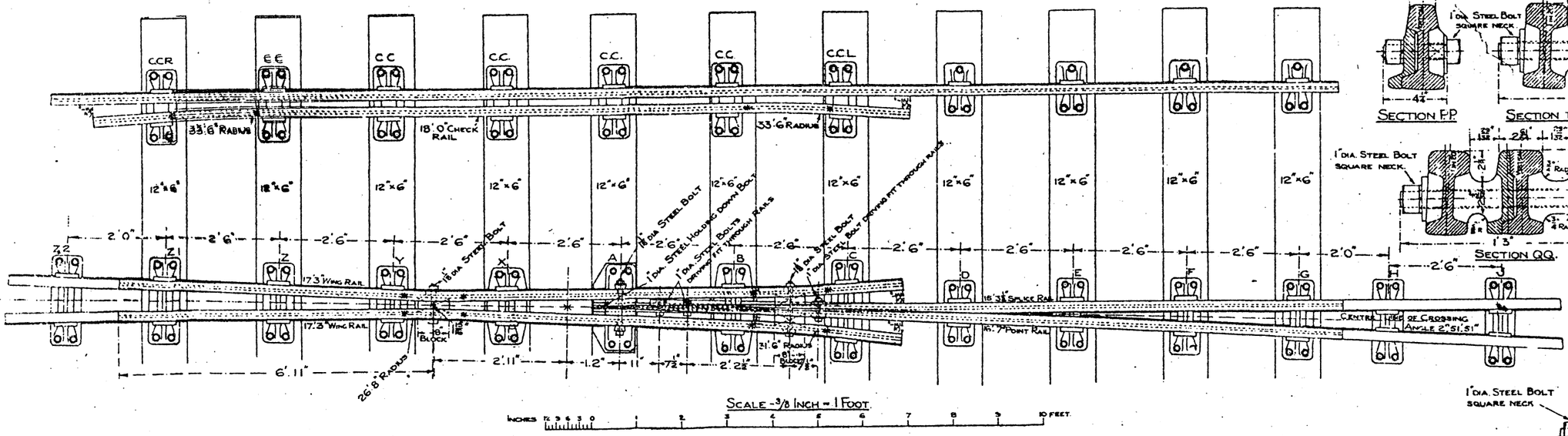

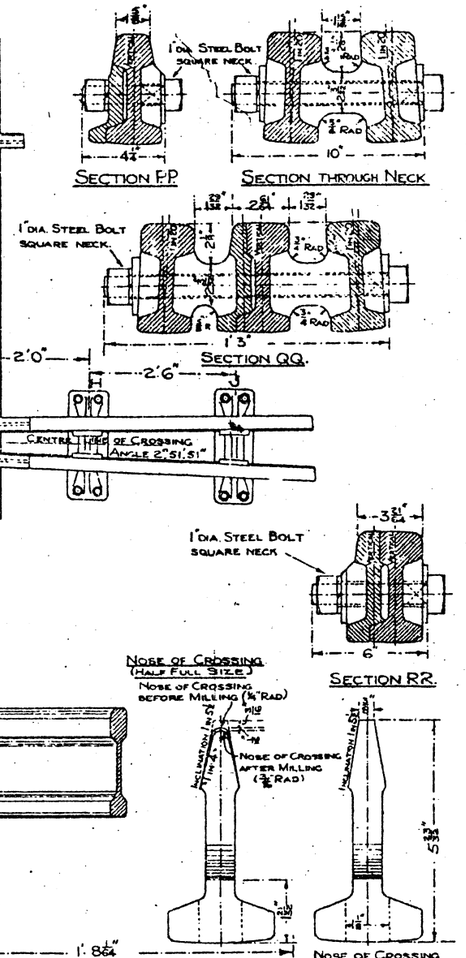

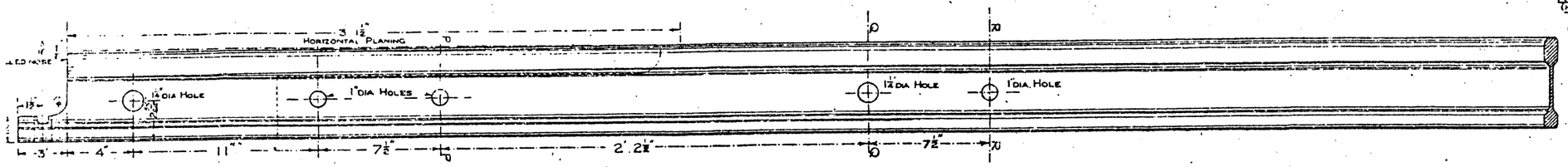

— ELEVATION. —

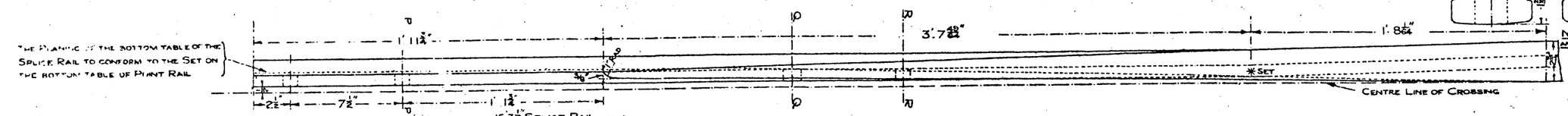

— SPLICE RAIL. —

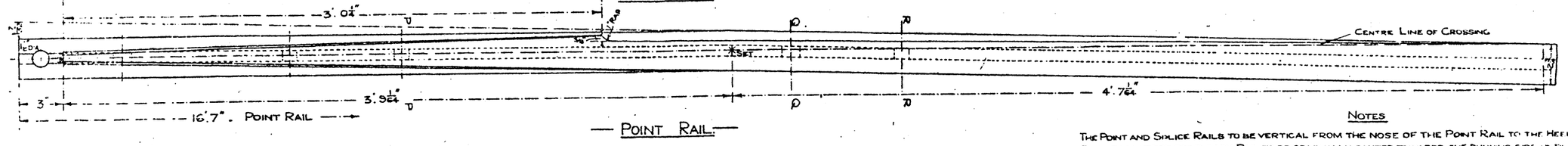

— POINT RAIL. —

— DETAILS OF CROSSING NOSE. —

SCALE:- 1½ INCHES = 1 FOOT.

INCHES 12 9 6 3 0 1 FOOT.

NOTES

THE POINT AND SPLICE RAILS TO BE VERTICAL FROM THE NOSE OF THE POINT RAIL TO THE HEEL OF THE SPLICE.
FROM THE LATTER POINT EACH RAIL TO BE GRADUALLY CANTED TOWARDS THE RUNNING SIDE UNTIL THE FULL INCLINATION OF 1 IN 20 FROM THE VERTICAL IS REACHED AT A DISTANCE OF FIFTEEN FEET BACK FROM THE NOSE.
THE WING RAILS TO BE CANTED TOWARDS THE RUNNING SIDE AT AN INCLINATION OF 1 IN 20 FROM THE VERTICAL.
THE CHECK RAILS TO BE VERTICAL.
ALL BOLTS AND NUTS TO CONFORM TO THE BRITISH STANDARD SPECIFICATION No. 64 AND TO BE FITTED WITH SPRING WASHERS.
THE FOLLOWING DETAILS APPLICABLE TO ALL COMMON CROSSINGS APPEAR ON DRAWING No. 32
"HOLDING-DOWN BOLT, SADDLE AND WASHER PLATE" AND "C 1 WASHERS, ALSO CHAIR SCREW FOR BUILT-UP "A" CHAIR.
FOR DETAILS OF COMMON CROSSING CHAIRS, SEE DRAWINGS Nos. 36, 37, 38.
FOR DETAILS OF THE S.1 CHAIR, SEE DRAWING No. 4.
THE ANGLE OF CROSSING IN 1" FIGURES TO BE STAMPED ON THE OUTSIDE OF THE WEB OF THE POINT, SPLICE AND WING RAILS, 2'4" FROM FISH-JOINT END.

STANDARD RAILWAY EQUIPMENT — PERMANENT WAY.

Nº 36.

CHAIRS FOR COMMON CROSSINGS.

95 R. B. S. RAIL.

BUILT UP A CHAIR
CROSSINGS 1 IN 4 TO 1 IN 5½.

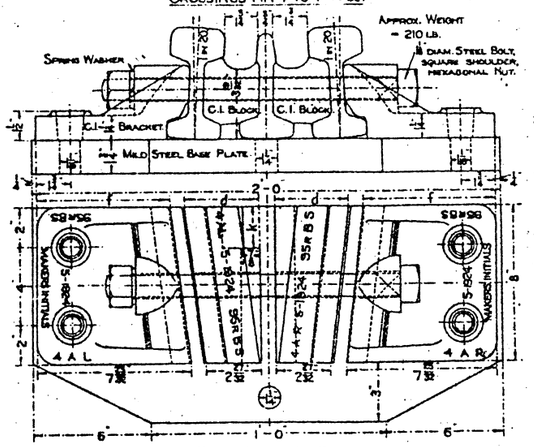

BUILT UP A CHAIR.
CROSSINGS 1 IN 6 TO 1 IN 16.

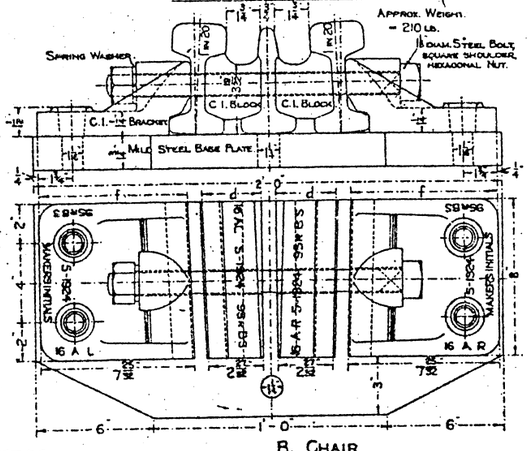

SOLID CAST IRON A CHAIR. NOTE - WHEN THIS CHAIR IS USED THE 3" EXTENSION OF POINT RAIL FOR HOLDING-DOWN BOLT IS NOT REQUIRED.
CROSSINGS 1 IN 4 TO 1 IN 5½.

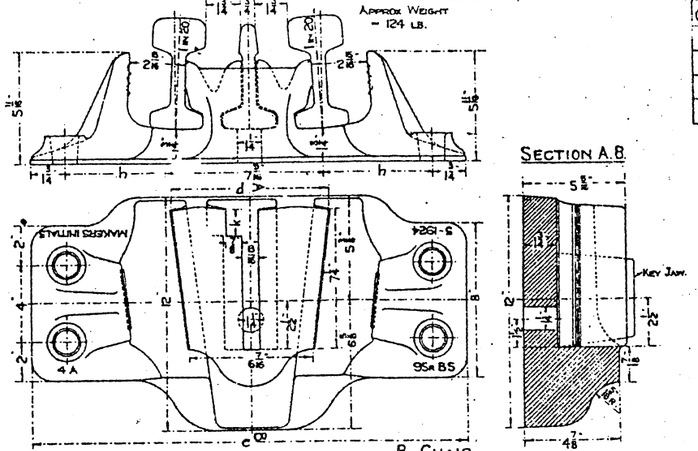

SECTION A.B.

SOLID CAST IRON A CHAIR. NOTE - WHEN THIS CHAIR IS USED THE 3" EXTENSION OF POINT RAIL FOR HOLDING-DOWN BOLT IS NOT REQUIRED.
CROSSINGS 1 IN 6 TO 1 IN 16.

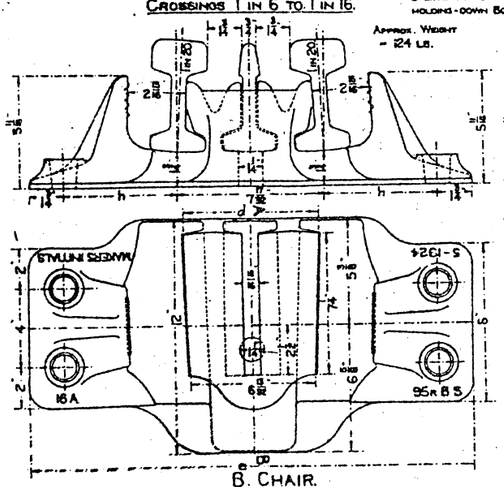

B. CHAIR
CROSSINGS 1 IN 4 TO 1 IN 5.

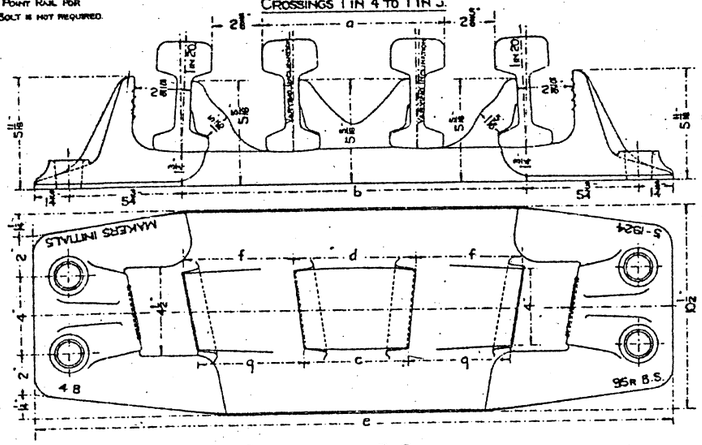

B. CHAIR.
CROSSINGS 1 IN 5½ TO 1 IN 9.

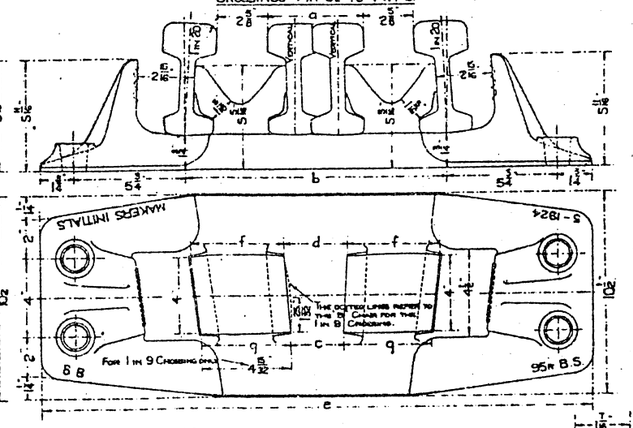

B. CHAIR.
CROSSINGS 1 IN 10 TO 1 IN 16

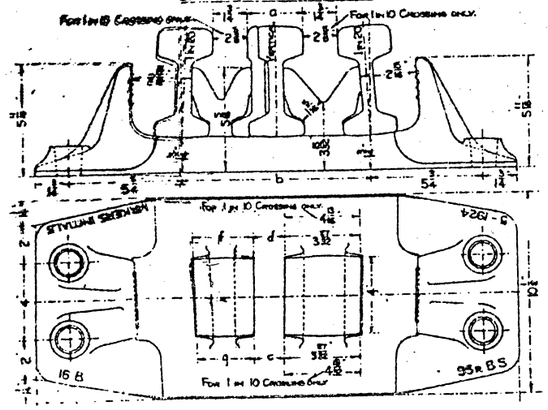

DIMENSIONS OF BUILT UP A CHAIRS.

Crossing	d	f	k	Crossing	d	f
1 in 4	3 27/32"	6 23/32"	2 1/8"	1 in 6	3 1/2"	7 1/8"
1 in 4½	3 29/32"	6 29/32"	1 3/4"	1 in 6½	3 15/32"	7 5/32"
1 in 5	3 31/32"	6 31/32"	1 1/2"	1 in 7	3 17/32"	7 3/32"
1 in 5½	3 31/32"	7 1/8"	1 1/4"	1 in 7½	3 3/8"	7 1/4"
				1 in 8	3 11/32"	7 9/32"
				1 in 9	3 13/32"	7 11/32"
				1 in 10	3 1/4"	7 3/8"
				1 in 12	3 5/32"	7 13/32"
				1 in 16	3 3/32"	7 17/32"

DIMENSIONS OF SOLID C.I. A. CHAIRS.

Crossing	h	d	e	k
1 in 4	6 1/16"	8 1/2"	1'-11 3/16"	1 3/8"
1 in 4½	6 3/32"	8 3/32"	1'-11 1/8"	1"
1 in 5	6"	7 7/8"	1'-11 1/16"	3/4"
1 in 5½	5 31/32"	7 3/4"	1'-11"	1/2"
1 in 6	5 31/32"	7 5/8"	1'-10 31/32"	
1 in 6½	5 15/16"	7 17/32"	1'-10 29/32"	
1 in 7	5 15/16"	7 7/16"	1'-10 27/32"	
1 in 7½	5 29/32"	7 3/8"	1'-10 25/32"	
1 in 8	5 27/32"	7 5/16"	1'-10 23/32"	
1 in 9	5 7/8"	7 7/32"	1'-10 15/32"	
1 in 10	5 7/8"	7 3/32"	1'-10 13/32"	
1 in 12	5 27/32"	7 1/32"	1'-10 3/32"	
1 in 16	5 13/16"	6 7/8"	1'-10 1/32"	

DETAILS OF C.I. BRACKET BUILT UP A CHAIRS.

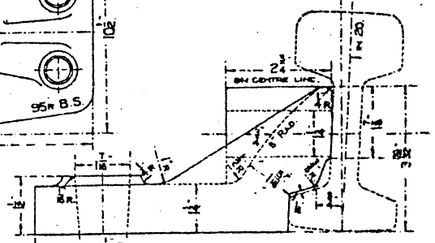

DIMENSIONS OF B. CHAIRS.

Crossing.	a	b	c	d	q	f	e	Approx Weight.	Varying Inclination
1 in 4	9 1/4"	1'-5 15/16"	5 5/16"	6 3/16"	5 7/16"	5 3/32"	2'-8 15/16"	155 Lb.	1 in 55
1 in 4½	8 5/16"	1'-4 7/8"	4 11/32"	5 3/32"	5 3/16"	5 1/8"	2'-7 7/8"	152 "	1 in 110
1 in 5	7 9/16"	1'-4 3/32"	3 5/8"	4 7/16"	5 1/8"	5 1/8"	2'-7 3/32"	149 "	1 in 130
1 in 5½	6 29/32"	1'-3 1/2"	4 9/16"	5 3/32"	4 7/8"	4 7/8"	2'-6 1/2"	146 "	
1 in 6	6 19/32"	1'-2 31/32"	4 3/32"	4 3/4"	4 13/32"	4 27/32"	2'-5 31/32"	143 "	
1 in 6½	6"	1'-2 17/32"	3 11/16"	4 9/32"	4 13/32"	4 15/16"	2'-5 17/32"	140 "	
1 in 7	5 15/32"	1'-2 1/8"	3 3/16"	3 29/32"	4 13/32"	4 15/16"	2'-5 1/8"	137 "	
1 in 7½	5 3/32"	1'-1 5/16"	3"	3 7/32"	4 13/32"	4 15/16"	2'-4 13/16"	134 "	
1 in 8	5"	1'-1 1/8"	2 3/4"	3 1/4"	4 13/32"	4 15/16"	2'-4 1/8"	131 "	
1 in 9	4 17/32"	1'-1 1/32"	2 7/16"	3 1/4"	4 13/32"	4 15/16"	2'-4 1/32"	128 "	
1 in 10	4 5/32"	1'-0 31/32"	2 3/32"	2 15/16"	4 1/16"	4 11/16"	2'-3 31/32"	138 "	
1 in 12	3 15/32"	10 1/8"	1 31/32"	2 5/8"	3 15/16"	3 15/32"	2'-1 5/8"	121 "	
1 in 16	2 5/8"	9 3/8"	1 5/8"	1 3/4"	2 5/16"	3 1/16"	2'-0 3/8"	118 "	

NOTES.

THE RAIL JAW OF ALL CROSSING CHAIRS TO CONFORM TO THE PROFILE OF THE RAIL JAW OF THE S.I. CHAIR (DRAWING Nº 4) SUBJECT, HOWEVER, TO THE ESSENTIAL DIFFERENCE IN THE HORIZONTAL INCLINATION - NECESSITATED BY THE ANGLE OF THE CROSSING.

THE DETAILS OF THE KEY JAW ARE SHEWN ON DRAWING Nº 38 AND THIS DRAWING IS TYPICAL OF KEY JAWS FOR ALL CROSSING CHAIRS, SUBJECT TO THE ESSENTIAL DIFFERENCE IN THE HORIZONTAL INCLINATION NECESSITATED BY THE ANGLE OF THE CROSSING

THE DETAILS OF THE C.I. BRACKETS FOR THE BUILT UP A. CHAIR ARE SHEWN ON THIS DRAWING AND THIS DRAWING IS TYPICAL OF THE BRACKETS FOR ALL CROSSINGS, SUBJECT TO THE ESSENTIAL DIFFERENCE IN THE HORIZONTAL INCLINATION NECESSITATED BY THE ANGLE OF THE CROSSING.

THE HORIZONTAL DIMENSIONS APPEARING IN THE ELEVATION DRAWINGS ARE THOSE OBTAINING IN THE CENTRE OF THE CHAIR, EXCEPTING IN THE CASE OF THE A. CHAIRS WHICH LATTER ARE TAKEN NOT AT THE CENTRE OF THE CHAIR BUT AT THE POINT OF THE CROSSING

THE HOLES IN THE CHAIR BASES TO TAKE THE STANDARD FERRULE AND SCREW.

THE NUMBER OF THE CROSSING TO BE CAST ON EACH SPECIAL CHAIR IN FRONT OF THE CHAIR LETTER, TO INDICATE FOR WHICH ANGLE OF CROSSING IT HAS BEEN DESIGNED.
THE DATE OF MANUFACTURE, MAKERS INITIALS, AND WEIGHT OF RAIL DESIGNED FOR, ARE ALSO TO BE CAST ON EACH CHAIR.

ELEVATION.

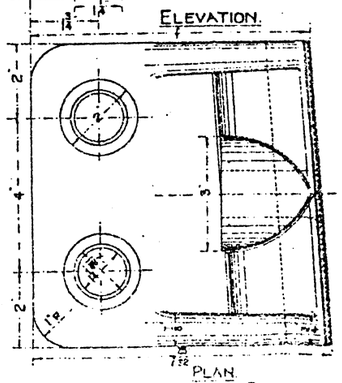

PLAN.

QUARTER FULL SIZE

SCALE: 1½ INCHES = 1 FOOT.

INCHES 12 9 6 3 0 1 FOOT

STANDARD RAILWAY EQUIPMENT — PERMANENT WAY.

CHAIRS FOR COMMON AND OBTUSE ANGLE CROSSINGS 1 IN 1½ TO 1 IN 3½.

95 R. B. S. RAIL.

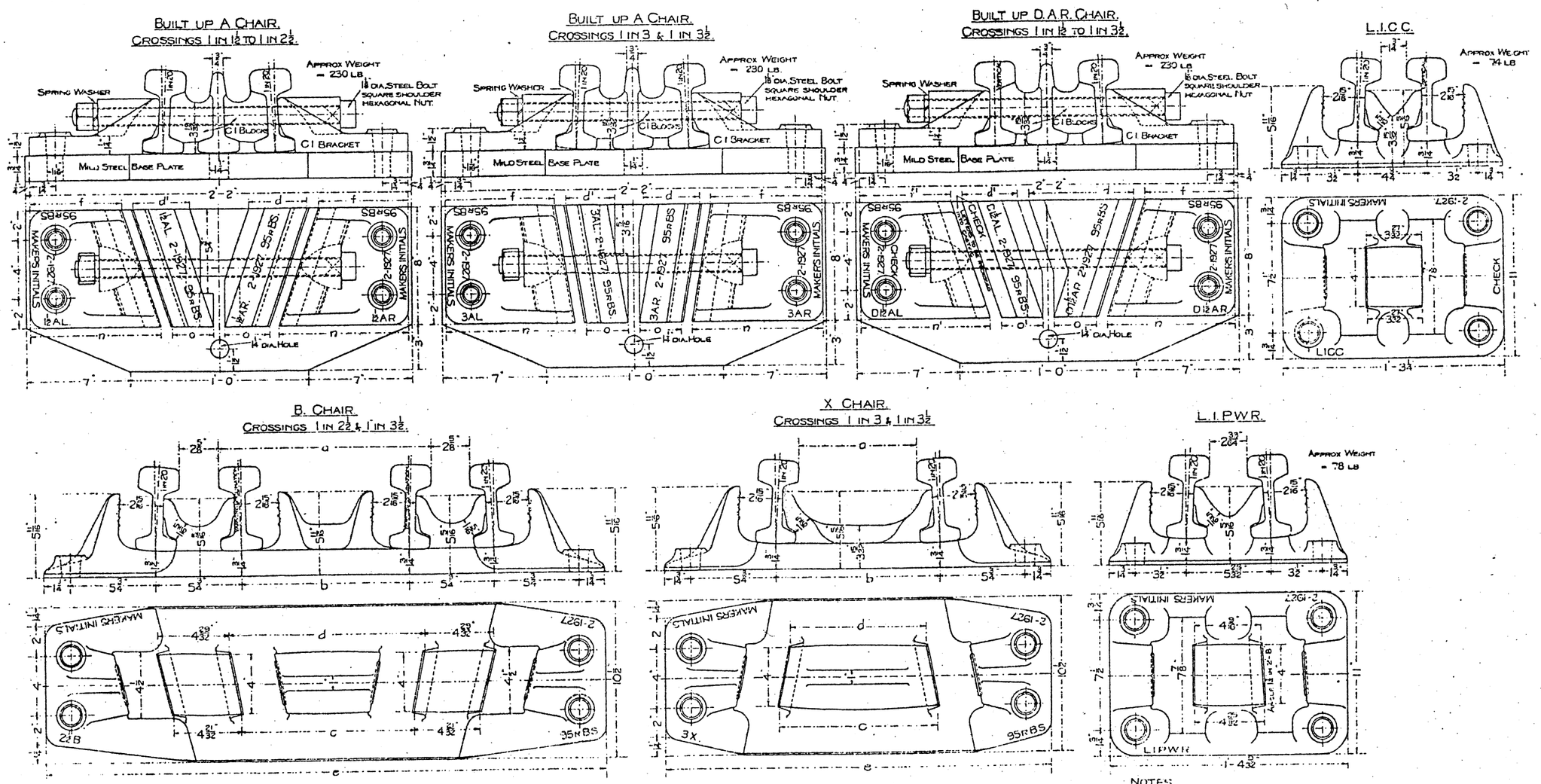

DIMENSIONS OF BUILT UP A CHAIRS.

Crossing	n	o	d	f	d'
1 in 1½	8 9/16	3"	4 1/32"	5 29/32"	4 1/32"
1 in 2	8 11/16	2 29/32"	3 15/16"	6 11/16"	3 15/16"
1 in 2½	8 3/4	2 7/8"	3 29/32"	7 5/32"	3 29/32"
1 in 3	8 3/4	2 7/8"	3 7/8"	7 19/32"	3 7/8"
1 in 3½	8 25/32	2 27/32"	3 7/8"	7 5/8"	3 7/8"

DIMENSIONS OF BUILT UP D.A.R. CHAIRS.

Crossing	n	o	n'	o'	f	d'	f'	d
1 in 1½	8 9/16	3"	8 21/32"	2 29/32"	5 29/32"	3 1/16"	6"	7 9/32"
1 in 2	8 11/16	2 29/32"	8 25/32"	2 27/32"	6 11/16"	3"	6 29/32"	5 11/16"
1 in 2½	8 3/4	2 7/8"	8 29/32"	2 15/16"	7 5/32"	3 13/16"	7 5/32"	5 5/32"
1 in 3	8 3/4	2 7/8"	8 15/16"	2 29/32"	7 19/32"	3 13/16"	7 19/32"	4 29/32"
1 in 3½	8 25/32	2 27/32"	8 27/32"	2 15/16"	7 5/8"	3 13/16"	7 11/16"	4 27/32"

DIMENSIONS OF B CHAIRS.

Crossing	a	b	c	d	e	Approx Weight	Easying Inclination
1 in 2½	1'-2 11/32"	11 11/32"	11 15/32"	1'-1 1/16"	3'-1 31/32"	200 LB	1 in 44
1 in 3	1'-0 5/64"	9 1/8"	9 11/32"	10 11/16"	2'-11 5/16"	188 LB	1 in 47
1 in 3½	10 5/32"	7 1/2"	7 9/16"	8 31/32"	2'-10"	180 LB	1 in 51

DIMENSIONS OF X CHAIRS.

Crossing	a	b	c	d	e	Approx Weight
1 in 3	7 29/64"	11 3/16"	10 3/4"	9 13/32"	2'-2 5/16"	111 LB
1 in 3½	6 43/64"	9 1/16"	9 1/32"	8 1/4"	2'-0 5/16"	108 LB

SCALE: 1½ INCHES = 1 FOOT.

NOTES.

THE RAIL JAW OF ALL CROSSING CHAIRS TO CONFORM TO THE PROFILE OF THE RAIL JAW OF THE S I CHAIR (DRAWING Nº 4) SUBJECT HOWEVER, TO THE ESSENTIAL DIFFERENCE IN THE HORIZONTAL INCLINATION NECESSITATED BY THE ANGLE OF THE CROSSING.

THE DETAILS OF THE KEY JAW ARE SHEWN ON DRAWING Nº 38 AND THIS DRAWING IS TYPICAL OF KEY JAWS FOR ALL CROSSING CHAIRS, SUBJECT TO THE ESSENTIAL DIFFERENCE IN THE HORIZONTAL INCLINATION NECESSITATED BY THE ANGLE OF THE CROSSING.

THE JAWS OF THE L I C C AND THE L I P W R CHAIRS TO CONFORM TO THE PROFILE OF THE JAWS OF THE L I CHAIR (DRAWING Nº 6) SUBJECT TO THE ESSENTIAL DIFFERENCE IN THE HORIZONTAL INCLINATION NECESSITATED BY THE ANGLE OF THE WING RAIL WITH THE CROSSING IN THE CASE OF THE L I P W R.

THE DETAILS OF THE C I BRACKETS FOR THE BUILT UP A CHAIR ARE SHOWN ON DRAWING Nº 36 AND THIS DRAWING IS TYPICAL OF THE BRACKETS FOR ALL CROSSINGS EXCEPTING THE LENGTH AND SUBJECT ALSO TO THE ESSENTIAL DIFFERENCE IN THE HORIZONTAL INCLINATION NECESSITATED BY THE ANGLE OF THE CROSSING.

THE HORIZONTAL DIMENSIONS APPEARING IN THE ELEVATION DRAWINGS ARE THOSE OBTAINING IN THE CENTRE OF THE CHAIR, EXCEPTING IN THE CASE OF THE A CHAIRS WHICH LATTER ARE TAKEN NOT AT THE CENTRE OF THE CHAIR BUT AT THE POINT OF THE CROSSING.

THE DIMENSIONS SHEWN ON THE DRAWINGS FOR THE RIGHT HAND CHAIRS APPLY ALSO TO THE CORRESPONDING LEFT HAND CHAIRS.

THE HOLES IN THE CHAIR BASES TO TAKE THE STANDARD FERRULE AND SCREW

THE NUMBER OF THE CROSSING TO BE CAST ON EACH SPECIAL CHAIR, IN FRONT OF THE CHAIR LETTER AND THE LETTER R OR L AFTER THE CHAIR LETTER, TO INDICATE FOR WHICH ANGLE OF CROSSING AND WHETHER RIGHT OR LEFT HAND, IT HAS BEEN DESIGNED. THE DATE OF MANUFACTURE, MAKERS INITIALS AND WEIGHT OF RAIL DESIGNED FOR ARE ALSO TO BE CAST ON EACH CHAIR

THIS DRAWING IN CONJUNCTION WITH THE DIMENSIONAL TABLES AND ALSO THE NOTES ABOVE FURNISH ALL INFORMATION REQUISITE FOR THE MANUFACTURE OF SPECIAL CHAIRS REQUIRED FOR COMMON AND OBTUSE ANGLE CROSSINGS 1 IN 1½ TO 1 IN 3½ INCLUSIVE

STANDARD RAILWAY EQUIPMENT — PERMANENT WAY.

CHAIRS FOR COMMON CROSSINGS.

95 R. B.S. RAIL.

C. CHAIR.
CROSSINGS 1 IN 4½ TO 1 IN 6½.

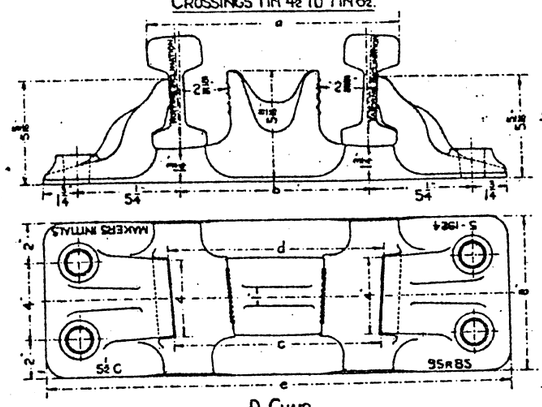

C. CHAIR.
CROSSINGS 1 IN 7 TO 1 IN 10.

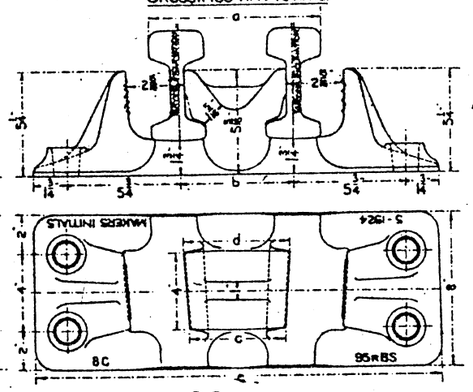

C. CHAIR.
CROSSINGS 1 IN 12 AND 1 IN 16.

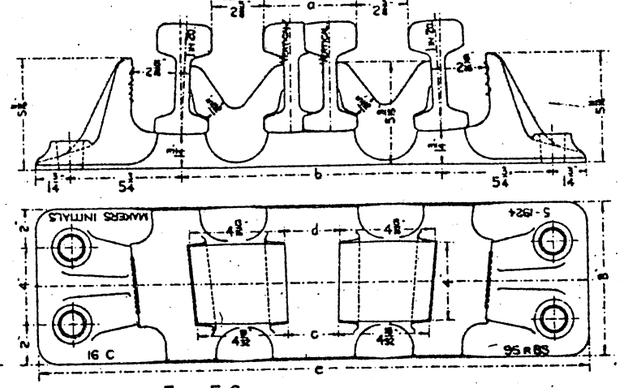

D. CHAIR.
CROSSINGS 1 IN 7 TO 1 IN 9.

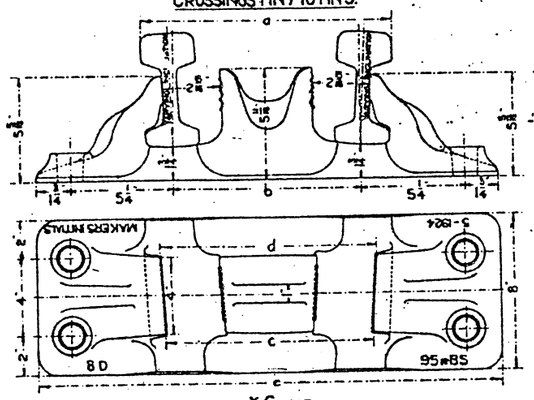

D. CHAIR.
CROSSINGS 1 IN 10 TO 1 IN 16.

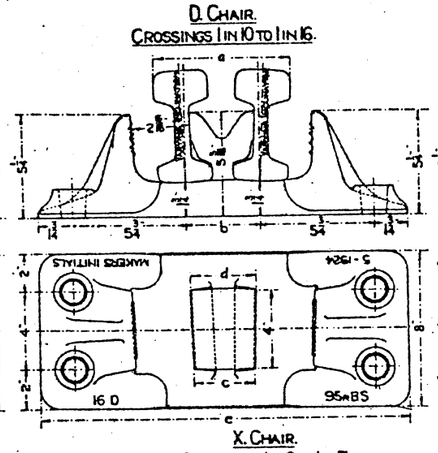

E AND F. CHAIRS.
CROSSING 1 IN 16.

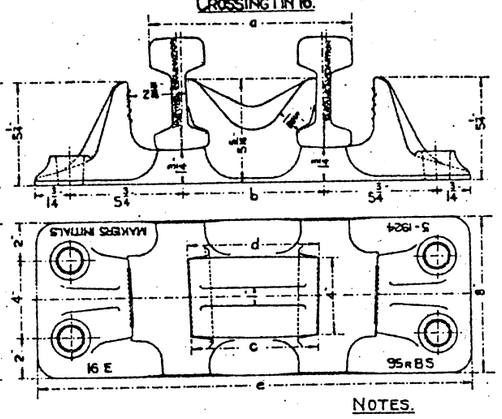

X. CHAIR
CROSSINGS 1 IN 4 TO 1 IN 5½

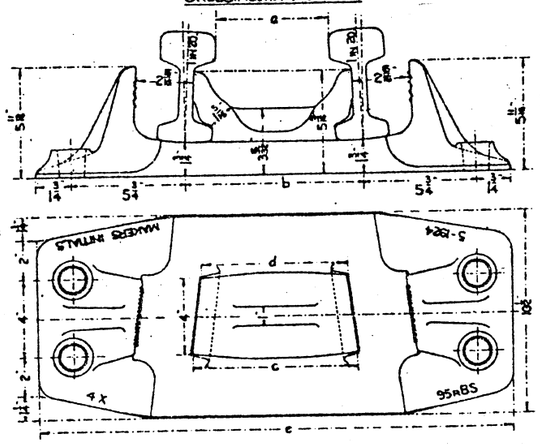

X. CHAIR.
CROSSINGS 1 IN 6 TO 1 IN 7.

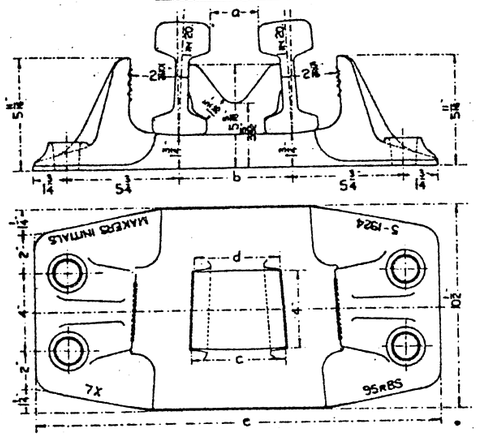

DIMENSIONS OF C. CHAIRS.

CROSSING	a	b	c	d	e	APPROX WEIGHT	VARYING INCLINATION
1 IN 4½	1'-2 11/32"	11 25/32"	1'-0 7/16"	1'-1 5/16"	2'-1 13/32"	96 LB	1 IN 32
1 IN 5	1'-1 3/16"	10½"	11 1/16"	11 7/8"	2'-0½"	92 -	1 IN 33
1 IN 5½	1'-0 3/8"	9 3/16"	9 25/32"	10 21/32"	1'-11 5/16"	88 -	1 IN 34
1 IN 6	11 5/32"	8 3/8"	9"	9 21/32"	1'-10 3/8"	85 -	1 IN 35
1 IN 6½	10 19/32"	7 9/16"	8 3/16"	8 13/16"	1'-9 9/16"	82 -	1 IN 36
1 IN 7	9 23/32"	6 31/32"	6 1/32"	6 3/8"	1'-9 31/32"	79 -	1 IN 58
1 IN 7½	9 5/32"	6 11/32"	5 15/32"	6"	1'-9 11/32"	78 -	1 IN 60
1 IN 8	8¼"	5 27/32"	4 9/16"	5 7/16"	1'-8 27/32"	76 -	1 IN 63
1 IN 9	7 1/8"	5 1/32"	4 5/32"	4 15/16"	1'-8 1/32"	72 -	1 IN 103
1 IN 10	7 5/32"	4 5/16"	3 7/16"	3 13/16"	1'-7 5/16"	68 -	1 IN 127
1 IN 12	6 5/32"	1'-2 9/32"	3 25/32"	4¼"	2'-5 9/32"	115 -	
1 IN 16	4¼"	1'-1¼"	2 5/8"	2 7/8"	2'-4¼"	110	

DIMENSIONS OF D. CHAIRS.

CROSSING	a	b	c	d	e	APPROX WEIGHT	VARYING INCLINATION
1 IN 7	1'-2¾"	11 3/32"	11 25/32"	1'-0 11/32"	2'-1 5/32"	91 LB	1 IN 29
1 IN 7½	1'-1 5/32"	10 13/16"	10 5/8"	11 7/16"	2'-0 9/16"	90 -	1 IN 29
1 IN 8	1'-0½"	9 29/32"	10 5/8"	10 5/8"	1'-11 9/32"	87 -	1 IN 30
1 IN 9	11 1/8"	8 3/4"	8 7/8"	9 11/32"	1'-10 3/16"	82 -	1 IN 42
1 IN 10	10 5/32"	7 3/16"	6 3/8"	6 23/32"	1'-10 3/16"	80 -	1 IN 44
1 IN 12	8 29/32"	5 11/16"	4 23/32"	5 3/16"	1'-8 11/16"	75 -	1 IN 66
1 IN 16	6 3/8"	3 25/32"	2 31/32"	3 7/32"	1'-6 25/32"	67 -	1 IN 116

DIMENSIONS OF E CHAIRS 1 IN 9 TO 1 IN 12; F 1 IN 12; G & H 1 IN 16 CROSSINGS.
(SEE DRAWING FOR D CHAIRS, 1 IN 7 TO 1 IN 9 CROSSINGS.)

CROSSING	CHAIR	a	b	c	d	e	APPROX WEIGHT	VARYING INCLINATION
1 IN 9	E	1'-2 17/32"	11 5/32"	1'-0 3/16"	1'-0 5/8"	2'-1 3/32"	92 LB	1 IN 27
1 IN 10	E	1'-1 3/32"	10"	10 13/16"	11 7/32"	2'-0"	89 -	1 IN 27
1 IN 12	E	11 1/32"	8 1/4"	8 5/8"	9 3/32"	1'-10 1/16"	81 -	1 IN 37
1 IN 12	F	1'-1 19/32"	10 7/16"	11 9/32"	11 5/8"	2'-0 7/16"	90 -	1 IN 25
1 IN 16	G	1'-0¼"	8 9/32"	9 31/32"	10 7/32"	1'-10 31/32"	83 -	1 IN 20
1 IN 16	H	1'-1¾"	10 5/32"	11 25/32"	11 23/32"	2'-0 15/32"	87 -	1 IN 20

DIMENSIONS OF E & F CHAIRS 1 IN 16 CROSSING.

CHAIR.	a	b	c	d	e	APPROX WEIGHT.	VARYING INCLINATION
E	8½"	5½"	4 13/16"	5½"	1'-8½"	75 LB.	1 IN 43
F	10⅜"	7¼"	6 5/8"	6⅞"	1'-10¼"	82 -	1 IN 27

DIMENSIONS OF X CHAIRS 1 IN 4 TO 1 IN 7 CROSSINGS.

CROSSING	a	b	c	d	e	APPROX WEIGHT
1 IN 4	5¼"	9"	8 15/32"	7 25/32"	2'-0"	106 LB
1 IN 4½	5 5/32"	8 3/32"	7⅛"	6¼"	1'-11 3/32"	105 -
1 IN 5	4 5/16"	7 23/32"	7"	6 5/8"	1'-10 29/32"	104 -
1 IN 5½	3 31/32"	7¼"	6⅛"	5 29/32"	1'-10¼"	103 -
1 IN 6	3 15/32"	6 27/32"	6¼"	5 5/32"	1'-9 27/32"	102 -
1 IN 6½	3¼"	6⅛"	5 23/32"	5 3/32"	1'-9⅛"	101 -
1 IN 7	2 31/32"	6 7/32"	5 5/32"	4 27/32"	1'-9 7/32"	100 -

NOTES.

THE RAIL JAW OF ALL CROSSING CHAIRS, TO CONFORM TO THE PROFILE OF THE RAIL JAW OF THE S.I CHAIR (DRAWING Nº 4) SUBJECT, HOWEVER, TO THE ESSENTIAL DIFFERENCE IN THE HORIZONTAL INCLINATION NECESSITATED BY THE ANGLE OF THE CROSSING.

THE DETAILS OF THE KEY JAW ARE SHEWN ON DRAWING Nº 38 AND THIS DRAWING IS TYPICAL OF KEY JAWS FOR ALL CROSSING CHAIRS, SUBJECT TO THE ESSENTIAL DIFFERENCE IN THE HORIZONTAL INCLINATION NECESSITATED BY THE ANGLE OF THE CROSSING AND SUBJECT ALSO TO THE HEIGHT BEING 5¼" INSTEAD OF 5 11/16" IN THE CASE OF THE FOLLOWING CHAIRS:—

C. CHAIRS FOR CROSSINGS 1 IN 7 TO 1 IN 10.
D. CHAIRS FOR CROSSINGS 1 IN 10 TO 1 IN 16.
E AND F CHAIRS FOR CROSSING 1 IN 16.

THE HORIZONTAL DIMENSIONS APPEARING IN THE ELEVATION DRAWINGS ARE THOSE OBTAINING IN THE CENTRE OF THE CHAIR.

THE HOLES IN THE CHAIR BASES TO TAKE THE STANDARD FERRULE AND SCREW.

THE NUMBER OF THE CROSSING TO BE CAST ON EACH SPECIAL CHAIR IN FRONT OF THE CHAIR LETTER, TO INDICATE FOR WHICH ANGLE OF CROSSING IT HAS BEEN DESIGNED. THE DATE OF MANUFACTURE, MAKERS INITIALS AND WEIGHT OF RAIL DESIGNED FOR ARE ALSO TO BE CAST ON EACH CHAIR.

SCALE:— 1½ INCHES = 1 FOOT.

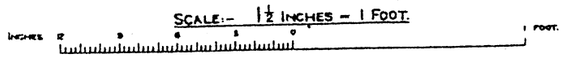

STANDARD RAILWAY EQUIPMENT — PERMANENT WAY.

CHAIRS FOR COMMON CROSSINGS.

95 R. B.S. RAIL.

X. CHAIR.
CROSSINGS 1 IN 7½ TO 1 IN 12.

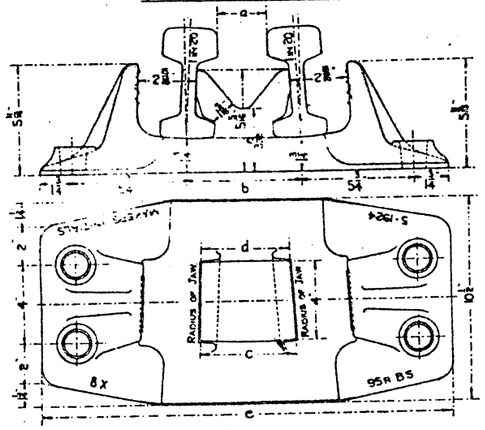

X. CHAIR.
CROSSING 1 IN 16.

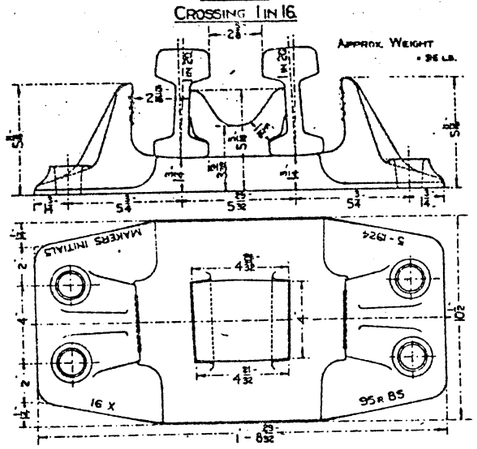

Y. CHAIR.
CROSSINGS 1 IN 6½ TO 1 IN 12.

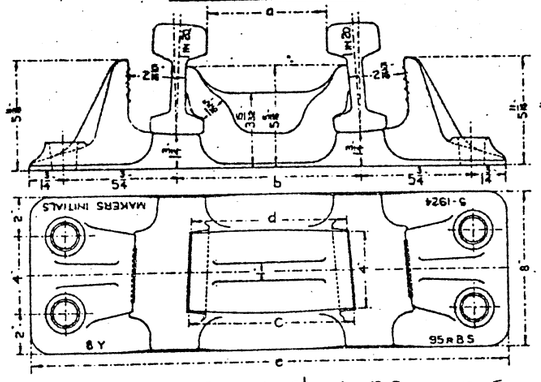

Y. CHAIR.
CROSSING 1 IN 16.

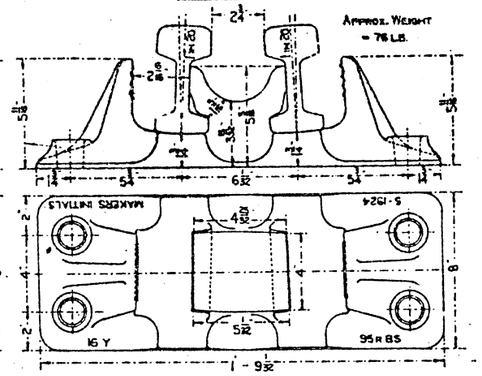

DIMENSIONS OF X CHAIRS 1 IN 7½ TO 1 IN 12 CROSSINGS.

CROSSING	a	b	c	d	e	APPROX WEIGHT	RADIUS OF JAW
1 IN 7½	2 13/32	6	5 3/32	4 21/32	1-9	98 LB.	10'-0"
1 IN 8	2 9/32	5 9/16	4 29/32	4 17/32	1-8 5/8	96 -	10'-8"
1 IN 9	2 3/32	5 17/32	4 3/16	4 1/8	1-8 17/32	94 -	12'-0"
1 IN 10	2 3/32	5 7/16	4 3/8	4 5/16	1-8 7/16	93 -	13'-4"
1 IN 12	2 5/32	5 7/16	4 1/4	4 7/16	1-8 7/16	93 -	16'-0"

DIMENSIONS OF Z CHAIR, 1 IN 12 ALSO Z & Z1 CHAIRS 1 IN 16 CROSSING.

SEE DRAWING FOR Y CHAIR, 1 IN 6½ TO 1 IN 12 CROSSINGS.

CROSSING	CHAIR.	a	b	c	d	e	APPROX WEIGHT.
1 IN 12	Z	6 5/32	9 11/16	8 3/4	8 5/32	2'-0 11/16	87 LB.
1 IN 16	Z1	4 3/8	7 29/32	6 25/32	6 21/32	1'-10 29/32	82 -
1 IN 16	Z.1.	6 1/2	9 25/32	8 23/32	8 15/32	2'-0 29/32	89 -

DIMENSIONS OF Y CHAIRS 1 IN 6½ TO 1 IN 12 CROSSINGS.

CROSSING	a	b	c	d	e	APPROX. WEIGHT
1 IN 6½	7 7/8	11 1/8	10 15/32	9 29/32	2'-2 1/8	92 LB.
1 IN 7	7 1/4	10 3/8	9 15/16	9 1/8	2'-1 17/32	90 -
1 IN 7½	6 23/32	10	9 5/32	8 5/8	2'-1	89 -
1 IN 8	6 1/4	9 1/2	8 29/32	8 5/32	2'-0 1/2	88 -
1 IN 9	5 25/32	8 3/4	7 27/32	7 25/32	1'-11 3/4	85 -
1 IN 10	4 27/32	8 1/8	7 7/32	6 25/32	1'-11 1/8	83 -
1 IN 12	3 29/32	7 3/16	6 1/4	5 29/32	1'-10 3/16	79 -

C.C.R.

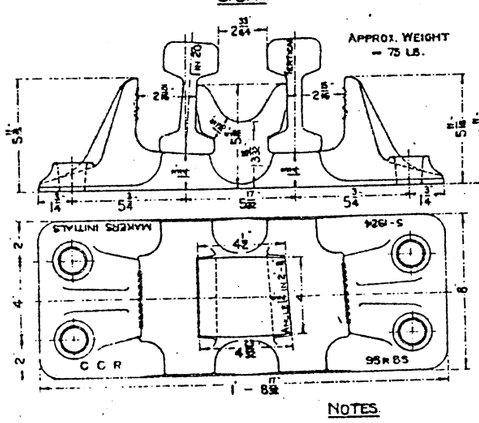

C.C.

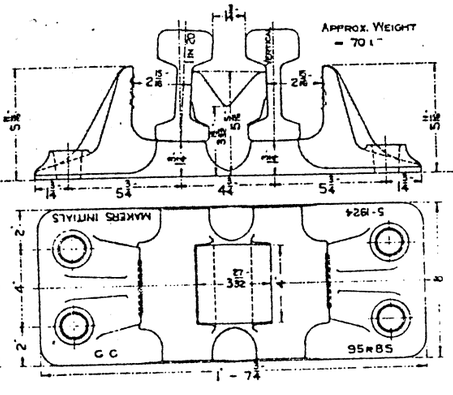

C.C.L.

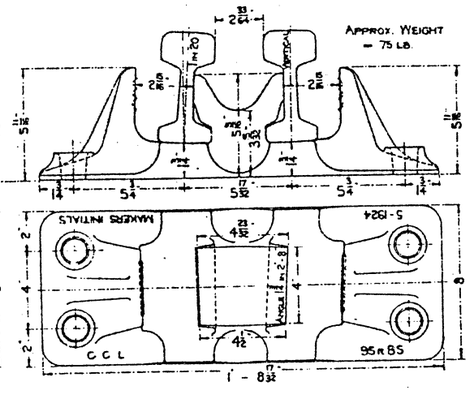

— DETAILS OF KEY JAW —
— QUARTER FULL SIZE —

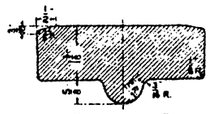

— SECTION A.B. —

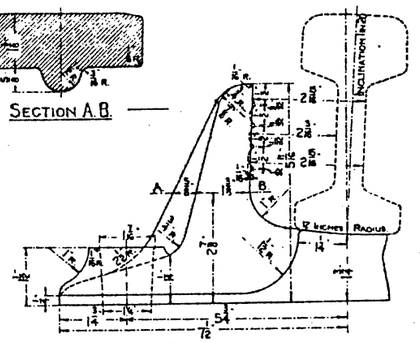

— ELEVATION —

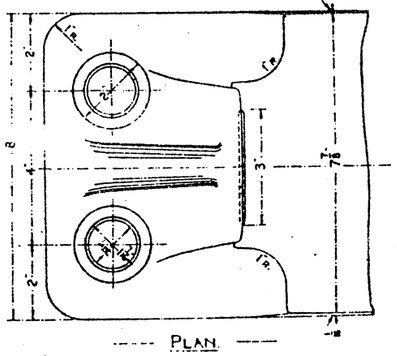

---- PLAN ----

NOTES.

THE RAIL JAW OF ALL CROSSING CHAIRS TO CONFORM TO THE PROFILE OF THE RAIL JAW OF THE S.I CHAIR (DRAWING Nº 4) SUBJECT, HOWEVER, TO THE ESSENTIAL DIFFERENCE IN THE HORIZONTAL INCLINATION NECESSITATED BY THE ANGLE OF THE CROSSING.

THE DETAILS OF THE KEY JAW ARE SHEWN ON THIS DRAWING AND THIS DRAWING IS TYPICAL OF KEY JAWS FOR ALL CROSSING CHAIRS, SUBJECT TO THE ESSENTIAL DIFFERENCE IN THE HORIZONTAL INCLINATION NECESSITATED BY THE ANGLE OF THE CROSSING.

THE HORIZONTAL DIMENSIONS APPEARING IN THE ELEVATION DRAWINGS ARE THOSE OBTAINING IN THE CENTRE OF THE CHAIR.

THE HOLES IN THE CHAIR BASES TO TAKE THE STANDARD FERRULE AND SCREW.

THE NUMBER OF THE CROSSING TO BE CAST ON EACH SPECIAL CHAIR IN FRONT OF THE CHAIR LETTER, TO INDICATE FOR WHICH ANGLE OF CROSSING IT HAS BEEN DESIGNED. THE DATE OF MANUFACTURE, MAKER'S INITIALS AND WEIGHT OF RAIL DESIGNED FOR ARE ALSO TO BE CAST ON EACH CHAIR.

SCALE:— 1½ INCHES = 1 FOOT.

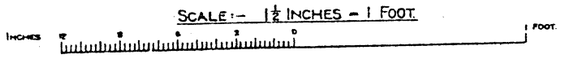

STANDARD RAILWAY EQUIPMENT — PERMANENT WAY.

COMMON CROSSING CHAIRS TO TAKE PARALLEL WING RAILS.

95R, B. S. RAIL.

B CHAIR.
CROSSINGS 1 IN 4 TO 1 IN 5.

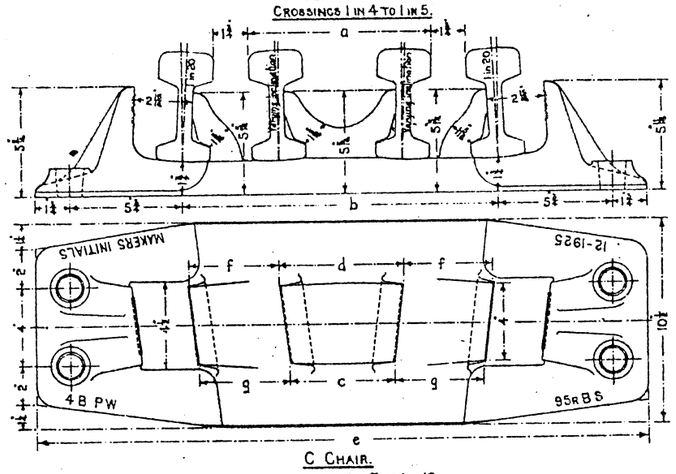

B CHAIR.
CROSSINGS 1 IN 5½ TO 1 IN 10.

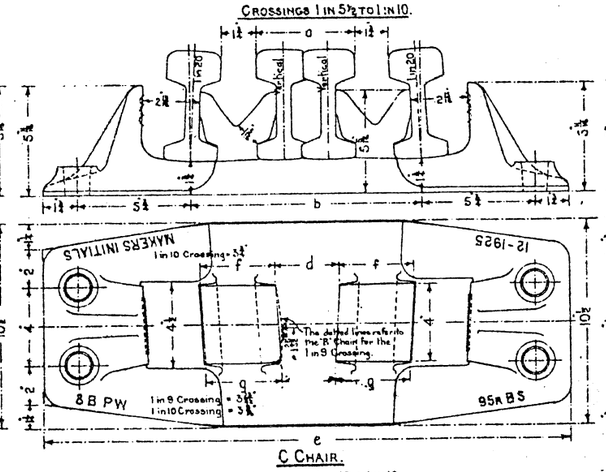

LI. P.W.

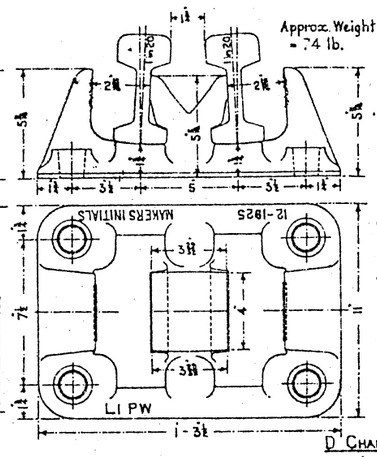

P.W.

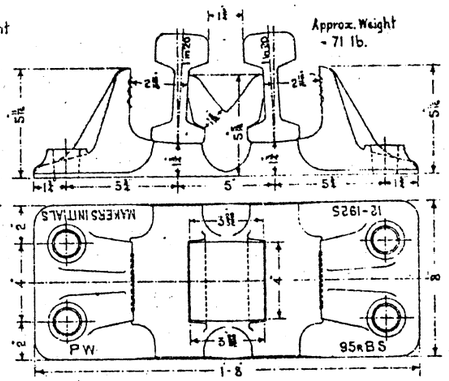

C CHAIR.
CROSSINGS 1 IN 7 TO 1 IN 10.

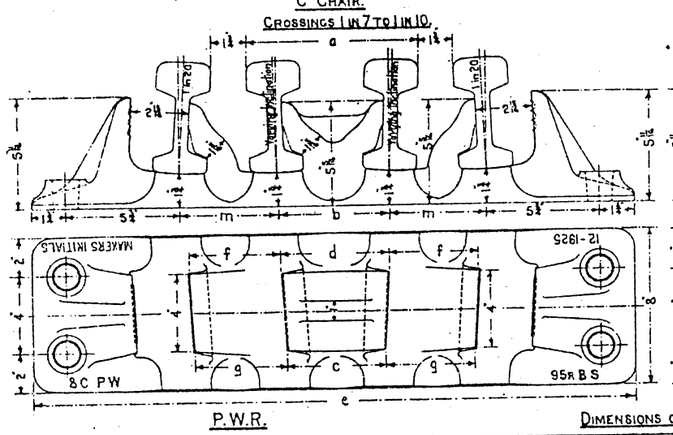

C CHAIR.
CROSSINGS 1 IN 12 & 1 IN 16.

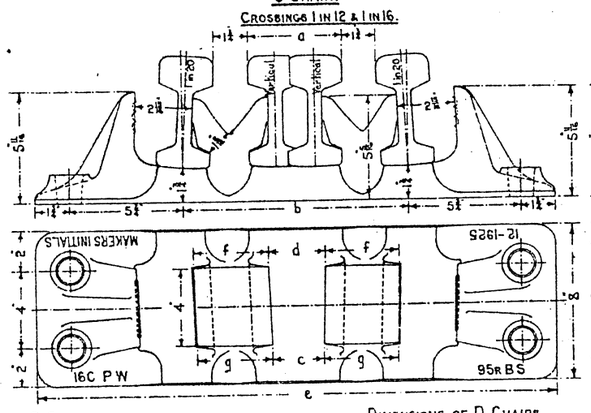

D CHAIR.
CROSSINGS 1 IN 7 TO 1 IN 9.

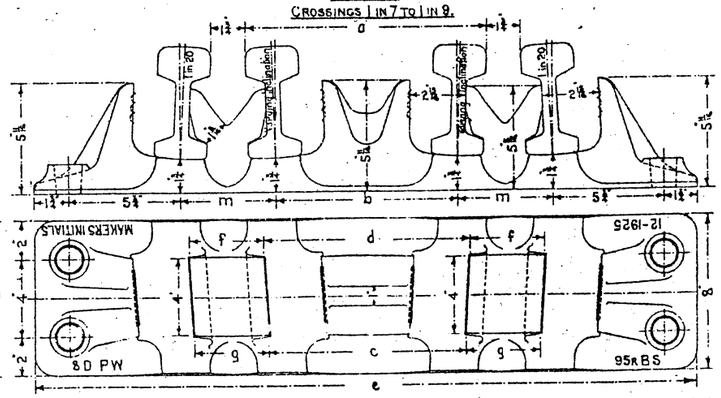

P.W.R.

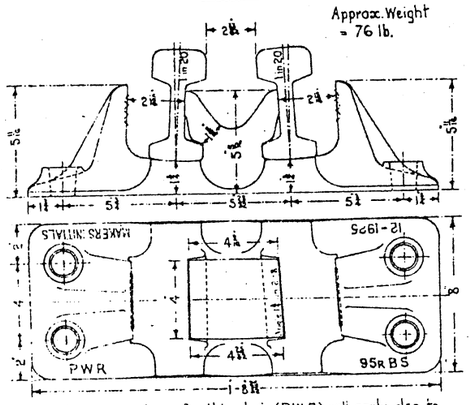

The dimensions shewn for this chair (P.W.R.) will apply also to the corresponding Left hand chair (P.W.L.).

DIMENSIONS OF B CHAIRS.

Crossing	a	b	c	d	f & g	e	Approx Weight	Varying Inclination
1 in 4	9¼	1-4 5/16	5 5/16	6 3/16	4 11/32	2-7 1/16	142 lb.	1 in 55
1 in 4½	8 3/16	1-3 7/8	4 15/16	5 5/32	4 7/8	2-6 7/8	138 lb.	1 in 110
1 in 5	7 3/16	1-2 11/32	3 7/8	4 11/16	4 7/8	2-5 11/32	135 lb.	1 in 150
1 in 5½	6 3/8	1-1 3/4	4 1/16	5 3/16	3 21/32	2-4 3/4	134 lb.	—
1 in 6	6 1/32	1-1 1/32	4 1/32	4 7/8	3 21/32	2-4 1/32	132 lb.	—
1 in 6½	6	1-0 29/32	3 13/16	4 5/32	3 21/32	2-3 29/32	130 lb.	—
1 in 7	5 29/32	1-0 7/8	3 13/16	3 29/32	3 21/32	2-3 7/8	128 lb.	—
1 in 7½	5 23/32	1-0 1/16	3	3 21/32	3 21/32	2-3 1/16	127 lb.	—
1 in 8	5	11 3/8	2 27/32	3 1/4	3 21/32	2-2 27/32	125 lb.	—
1 in 9	4 21/32	11 1/32	2 7/16	2 27/32	3 21/32	2-2 5/32	123 lb.	—
1 in 10	4 3/16	10 29/32	2 1/16	2 7/16	3 21/32	2-1 29/32	122 lb.	—

DIMENSIONS OF C CHAIRS

Crossing	a	b	c	d	f & g	m	e	Approx Weight	Varying Inclination
1 in 7	9 29/32	6 3/16	6 1/16	6 3/8	4 3/8	4 21/32	2-7 11/16	123 lb.	1 in 58
1 in 7½	9 1/16	6 1/32	5 15/32	6	4 3/8	4 21/32	2-7 1/32	121 lb.	1 in 60
1 in 8	8 3/8	5 27/32	4 15/16	5 7/16	4 3/8	4 21/32	2-6 15/32	118 lb.	1 in 63
1 in 9	7 3/8	5 1/32	4 3/16	4 23/32	4 3/16	4 1/16	2-5 11/32	115 lb.	1 in 103
1 in 10	7 1/32	4 3/8	3 29/32	3 29/32	4 3/16	4 1/16	2-4 15/32	113 lb.	1 in 127
1 in 12	6 1/32	1-0 11/32	3 11/32	4 1/4	3 11/32	—	2-3 11/32	110 lb.	—
1 in 16	4 3/8	11 1/2	2 3/8	2 3/8	3 11/32	—	2-2 1/4	106 lb.	—
See Drawing for D Chairs, Crossings 1 in 7 to 1 in 9.									
1 in 4½	1-2 11/32	11 23/32	1-0 5/32	1-1 3/8	3 1/8	4 23/32	3-0 23/32	146 lb.	1 in 32
1 in 5	1-1 3/16	10 1/2	11 1/16	11 3/8	3 1/8	4 19/32	2-11 3/16	143 lb.	1 in 33
1 in 5½	1-0 11/16	9 3/8	9 15/16	10 23/32	3 1/8	4 23/32	2-10 5/16	141 lb.	1 in 34
1 in 6	11 23/32	8 5/8	9	9 11/32	3 1/8	4 23/32	2-9 3/16	139 lb.	1 in 35
1 in 6½	10 29/32	7 3/16	8 1/16	[illegible]	[illegible]	4 23/32	2-8 3/8	137 lb.	1 in 36

DIMENSIONS OF D CHAIRS.

Crossing	a	b	c	d	f & g	m	e	Approx. Weight	Varying Inclination
1 in 7	1-2 3/16	11 3/8	11 23/32	1-0 13/32	3 1/8	4 15/16	2-11 13/32	145 lb.	1 in 29
1 in 7½	1-1 23/32	10 7/16	10 7/8	11 7/16	3 1/8	4 15/16	2-11 1/16	143 lb.	1 in 29
1 in 8	1-0 7/8	9 13/32	10 1/8	10 7/8	3 1/8	4 15/16	2-10 3/16	141 lb.	1 in 30
1 in 9	11 7/16	8 7/16	8 3/8	9 13/32	3 1/8	4 1/8	2-8 15/16	138 lb.	1 in 42
See Drawing for C Chairs, Crossings 1 in 7 to 1 in 10.									
1 in 10	10 13/32	7 3/16	6 1/8	6 23/32	4 1/8	4 1/8	2-7 15/16	124 lb.	1 in 44
1 in 12	8 23/32	5 11/16	4 27/32	5 3/16	4 1/32	4 27/32	2-6 1/8	118 lb.	1 in 66
1 in 16	6 1/8	3 23/32	2 31/32	3 3/16	4 1/32	4 13/16	2-4 13/16	112 lb.	1 in 116

DIMENSIONS OF E CHAIRS.

See Drawing for D Chairs, Crossings 1 in 7 to 1 in 9.

Crossing	a	b	c	d	f & g	m	e	Approx. Weight	Varying Inclination
1 in 9	1-2 27/32	11 13/32	1-0 3/16	1-0 5/8	3 1/8	4 15/16	3-0 5/32	145 lb.	1 in 27
1 in 10	1-1 3/16	10	10 13/16	11 5/32	3 1/8	4 15/16	2-10 1/8	142 lb.	1 in 27
1 in 12	11 3/32	8 1/16	8 13/16	9 3/16	3 1/8	4 23/32	2-8 1/8	138 lb.	1 in 37
See Drawing for C Chairs, Crossings 1 in 7 to 1 in 10.									
1 in 16	8 1/8	5 1/8	4 13/32	5 1/16	4 3/8	4 1/8	2-6 1/8	117 lb.	1 in 43

DIMENSIONS OF F CHAIR 1 IN 12; F G & H CHAIRS 1 IN 16; CROSSINGS.

See Drawing for D Chairs, Crossings 1 in 7 to 1 in 9.

Crossing	Chair	a	b	c	d	f & g	m	e	Approx. Weight	Varying Inclination
1 in 12	F	1-1 13/16	10 1/16	11 3/16	11 3/8	3 1/8	4 1/16	2-11 3/16	143 lb.	1 in 25
1 in 16	G	1-0 1/4	8 15/16	9 31/32	10 3/16	3 23/32	5	2-9 31/32	140 lb.	1 in 20
1 in 16	H	1-1 1/8	10 13/16	11 23/32	11 23/32	3 23/32	5	2-11 23/32	144 lb.	1 in 20
See Drawing for C Chairs, Crossings 1 in 7 to 1 in 10.										
1 in 16	F	10 1/8	7 1/16	6 3/8	6 3/8	4 1/8	4 15/16	2-8 1/8	125 lb.	1 in 27

SCALE:- 1½ INCHES = 1 FOOT.

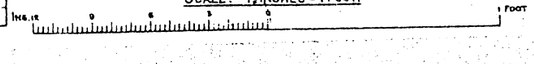

NOTES.

The dimensions shewn on the drawings are for common crossing chairs to take Double Parallel Wing Rails. The dimensions will also apply to chairs to take either Right or Left Hand Parallel Wing Rails, and the dimensions appearing on Drawings Nos. 36 and 37 (chairs for common crossings) will be used in conjunction with those shewn on this Drawing, for the manufacture of these chairs.

The rail jaw of all crossing chairs to conform to the profile of the rail jaw of the S.I. chair (Drawing No. 4) subject, however, to the essential difference in the horizontal inclination necessitated by the angle of the crossing.

The details of the key jaw are shewn on Drawing No. 38 and this drawing is typical of key jaws for all crossing chairs, subject to the essential difference in the horizontal inclination necessitated by the angle of the crossing.

The jaws of the L.I.P.W. chair to conform to the profile of the jaws of the L.I. chair (Drawing No. 6)

The horizontal dimensions appearing in the elevation drawings are those obtaining in the centre of the chair.

The holes in the chair bases to take the standard ferrule and screw.

The number of the crossing to be cast on each special chair in front of the chair letter, with the letters P.W. added, to indicate for which angle of crossing it has been designed and also that it takes Double Parallel Wing Rails. In the case of chairs to take Right or Left Hand Parallel Wing Rails, the letter R or L is to be cast after the P.W.. The date of manufacture, makers initials and weight of rail designed for, are also to be cast on each chair.

JANUARY, 1926.

STANDARD RAILWAY EQUIPMENT — PERMANENT WAY.

No. 38B.

METHOD OF TIMBERING JUNCTIONS & CROSSOVER-ROADS.

95R. B. S. RAIL.

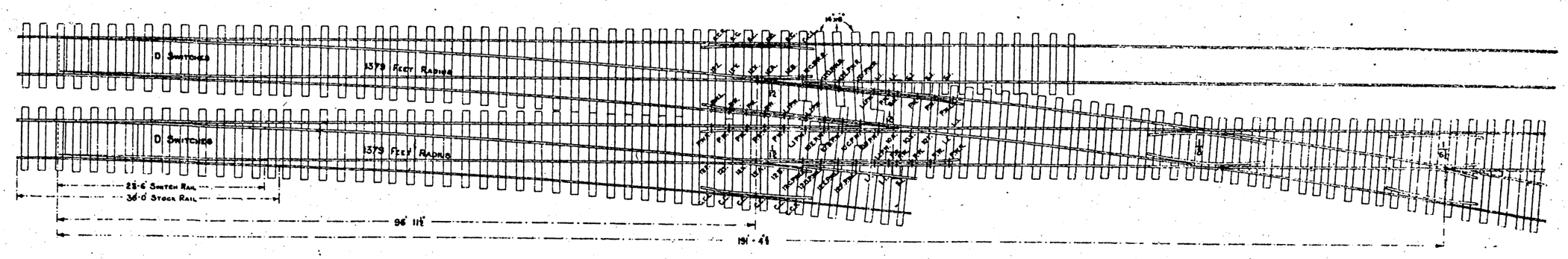

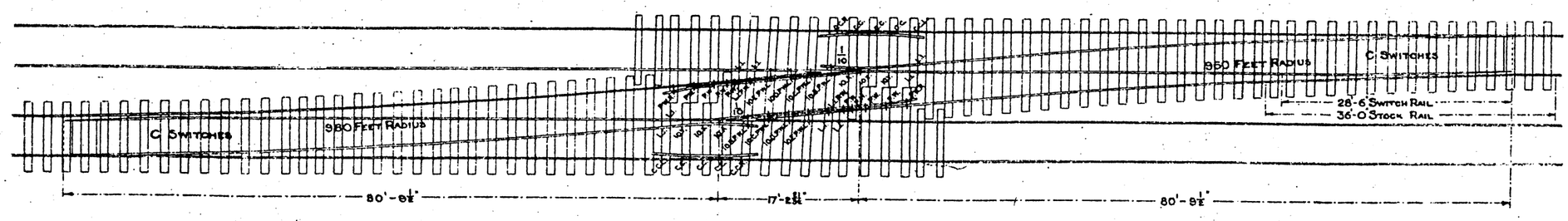

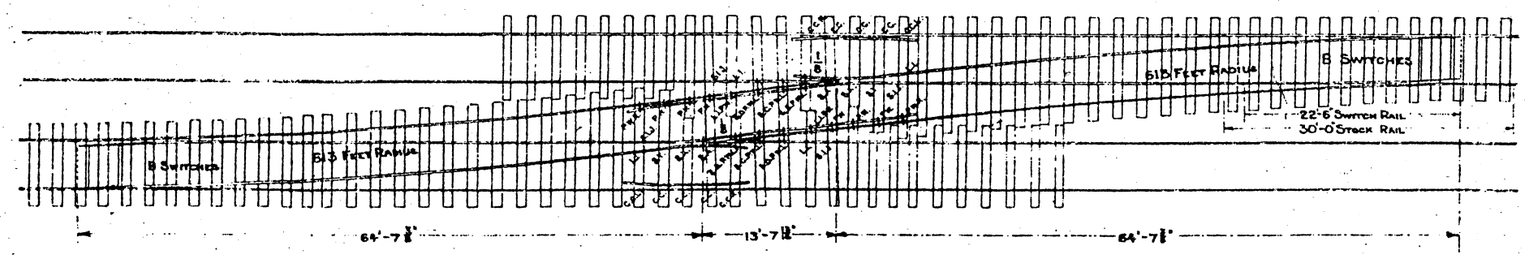

NOTE. ALL TIMBERS ARE 12" x 6" EXCEPT WHERE OTHERWISE SHEWN, AND THE LENGTH ALLOWS FOR 1'8" OUTSIDE THE RAILS.

WHEN PARALLEL WING RAILS ARE USED, SPECIAL "P.W." CHAIRS WILL SUPERSEDE, IN THE SAME POSITION, CERTAIN OF THE ORDINARY COMMON CROSSING CHAIRS, AS INDICATED ON THE DRAWING.

SCALE:- 1/16 INCH = FOOT.

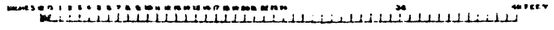

STANDARD RAILWAY EQUIPMENT — PERMANENT WAY. No. 38c

METHOD OF TIMBERING UNDER CROSSINGS.

95 R. B. S. RAIL.

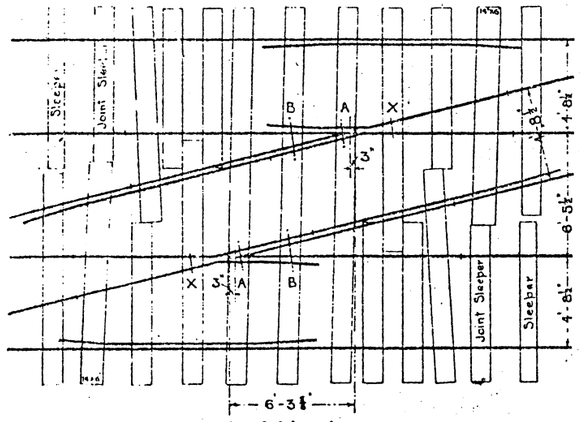

1 IN 4

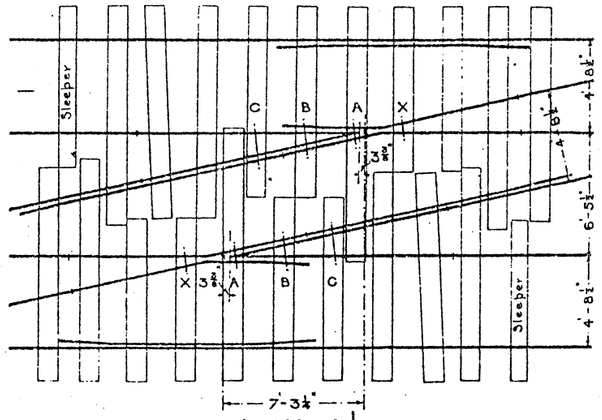

1 IN 4½

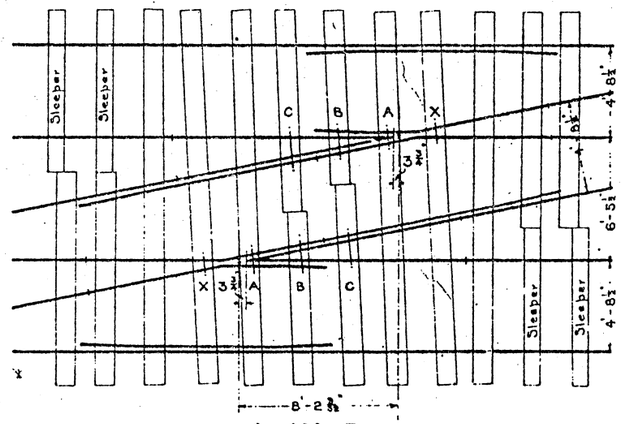

1 IN 5

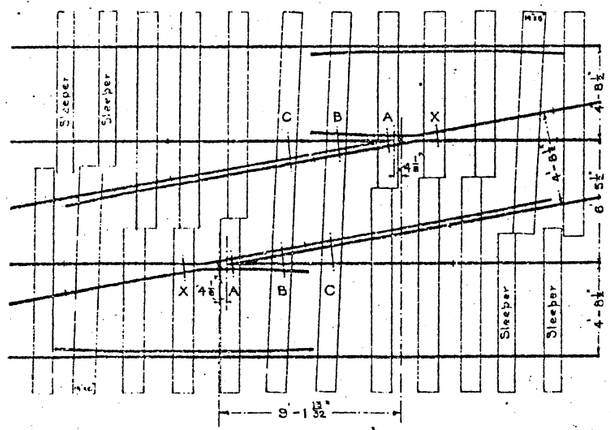

1 IN 5½

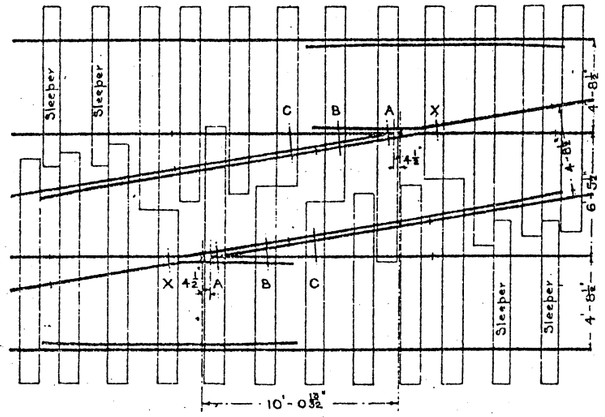

1 IN 6

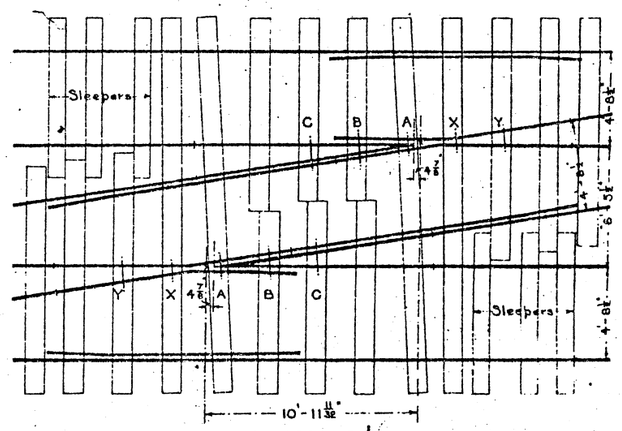

1 IN 6½

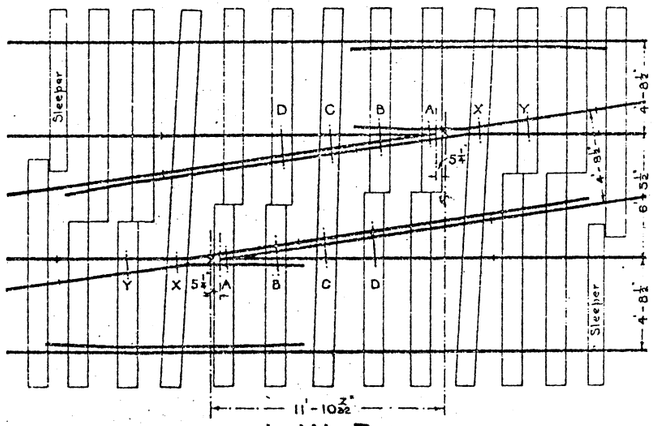

1 IN 7

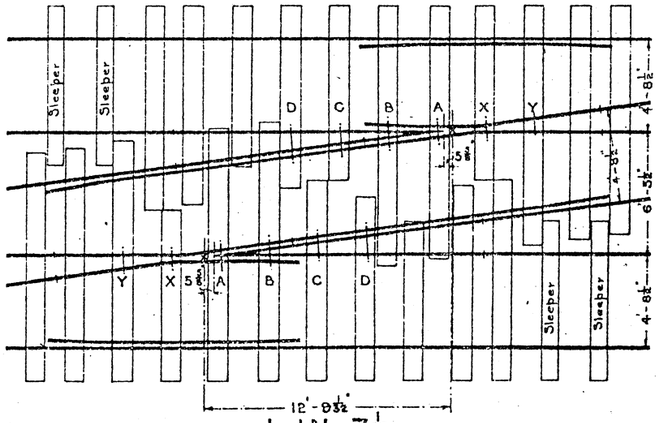

1 IN 7½

Note:- All timbers are 12"x6" except where otherwise shewn, and the length allows for 1'-8 outside the rails.

SCALE:- 8 FEET - 1 INCH.

INCHES 12 8 0 1 2 3 4 5 6 7 8 9 10 11 12 13 14 15 16 17 18 19 20 21 22 23 24 25 26 27 28 29 30 FEET.

NOVEMBER, 1925

METHOD OF TIMBERING UNDER CROSSINGS.

95R, B. S. RAIL.

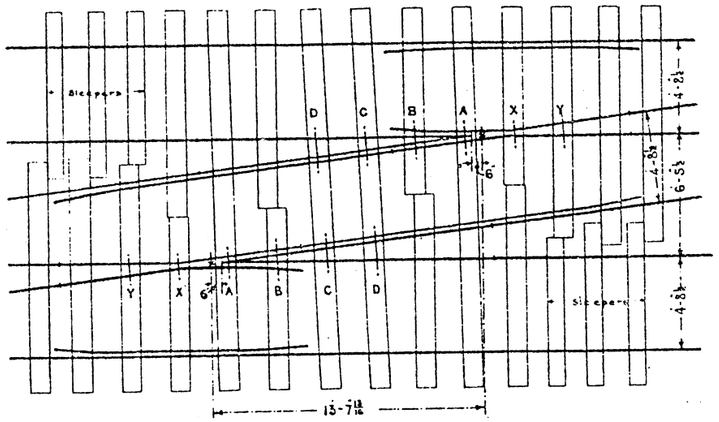

1 IN 8

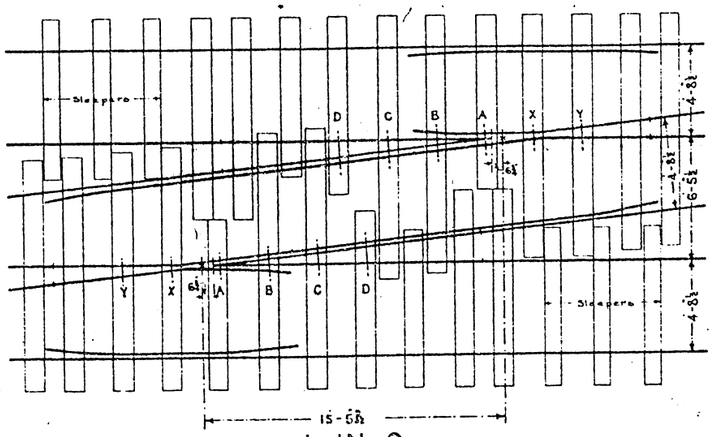

1 IN 9

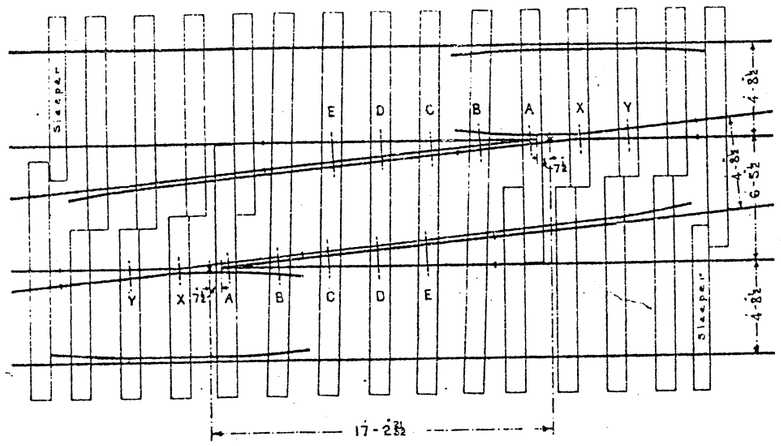

1 IN 10

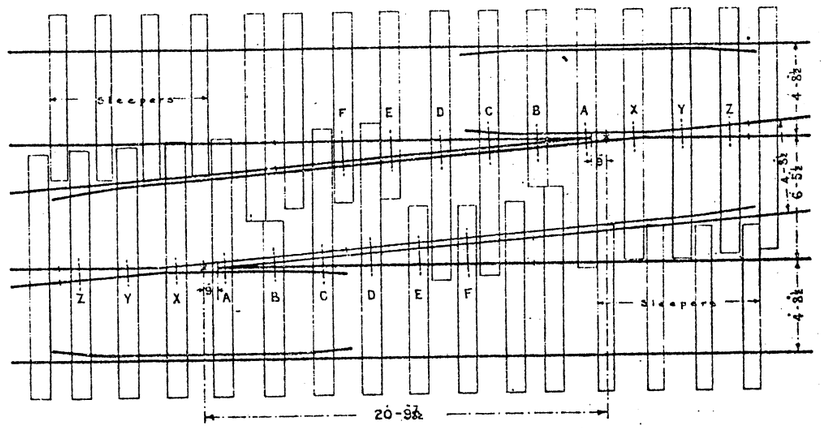

1 IN 12

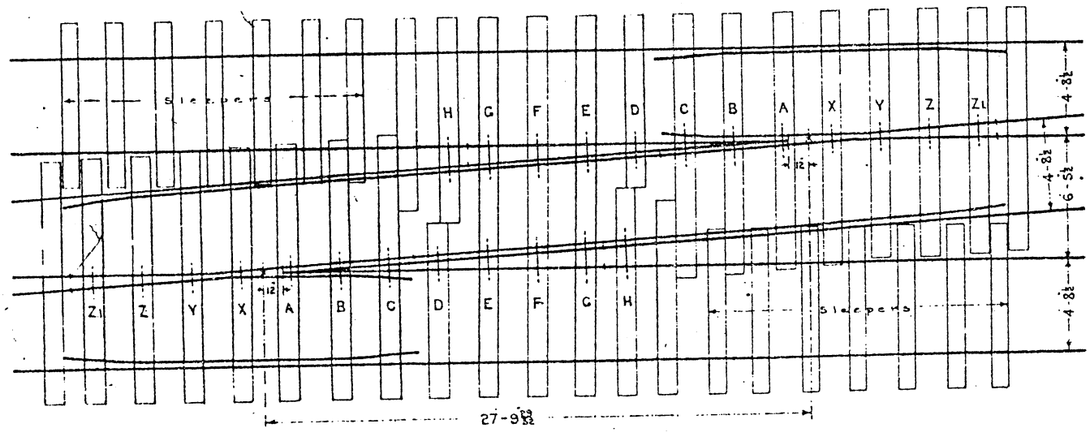

1 IN 16

Note.- All timbers are 12" x 6" and the length allows for 1'-8" outside rails.

SCALE:- 8 FEET = 1 INCH.

STANDARD RAILWAY EQUIPMENT — PERMANENT WAY.

OBTUSE ANGLE CROSSING 1 IN 4.

95 R. B. S. RAIL.

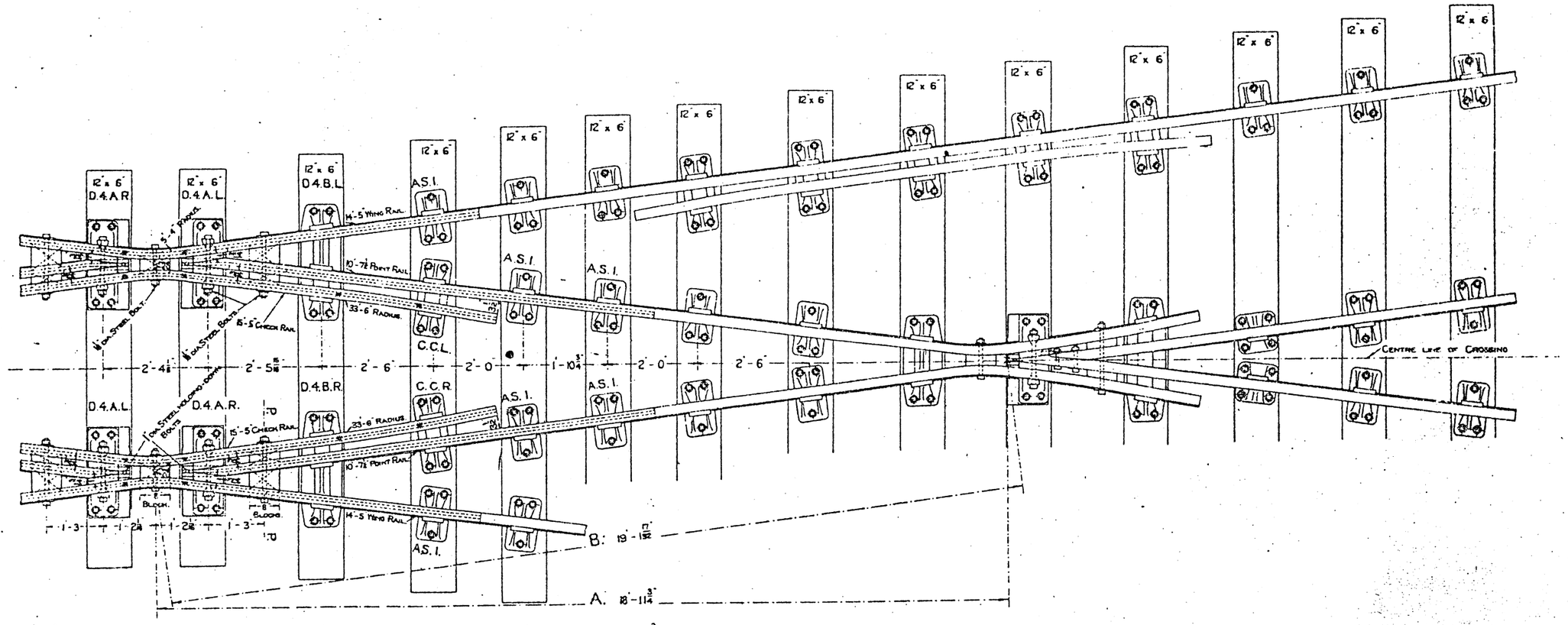

SCALE — 3/16 INCH = 1 FOOT

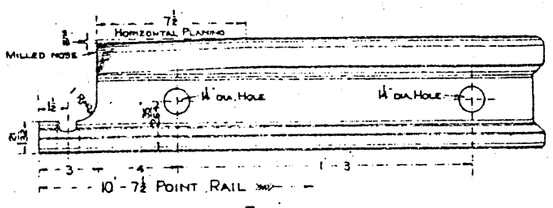

— ELEVATION —

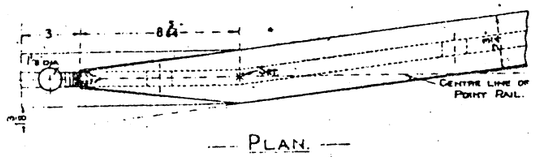

— PLAN —

DETAILS OF POINT RAIL.

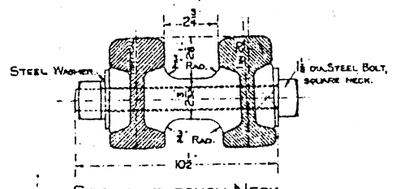

— SECTION THROUGH NECK —

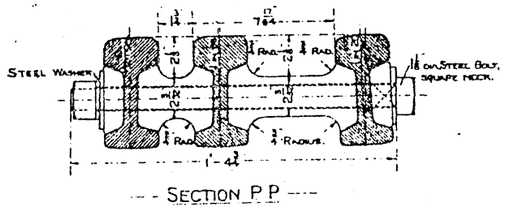

— SECTION P P —

SCALE — 1½ INCHES = 1 FOOT

NOTES.

THE LENGTHS OF THE POINT RAILS SHOWN APPLY TO THE INTERSECTION OF STRAIGHT ROADS ONLY. IN THE CASE OF CURVED INTERSECTIONS THE LENGTH OF THE POINT RAILS WILL REQUIRE TO BE VARIED.

THE POINT RAIL TO BE VERTICAL FROM THE NOSE TO THE SET. FROM THE LATTER POINT THE RAIL IS TO BE GRADUALLY CANTED TOWARDS THE RUNNING SIDE UNTIL THE FULL INCLINATION OF 1 IN 20 FROM THE VERTICAL IS REACHED AT A DISTANCE OF FIVE FEET BACK FROM THE NOSE.

THE WING RAILS TO BE CANTED TOWARDS THE RUNNING SIDE AT AN INCLINATION OF 1 IN 20 FROM THE VERTICAL.

THE CHECK RAILS TO BE VERTICAL.

ALL BOLTS AND NUTS TO CONFORM TO THE L.M.S. SPECIFICATION No. 48B AND TO BE FITTED WITH STEEL WASHERS.

THE FOLLOWING DETAILS APPLICABLE TO ALL OBTUSE ANGLE CROSSINGS APPEAR ON DRAWING No. 43.

"CROSSING NOSE BEFORE AND AFTER MILLING."
"HOLDING DOWN BOLT, SADDLE AND WASHER PLATE."
"C.I. WASHER, ALSO CHAIR SCREW FOR BUILT UP 'A' CHAIR FASTENINGS."

FOR DETAILS OF OBTUSE ANGLE CROSSING CHAIRS OTHER THAN C.C.R., C.C.L. AND A.S.I. SEE DRAWING No. 44.

FOR DETAILS OF THE C.C.R. AND C.C.L. CHAIRS, SEE DRAWING No. 38.

FOR DETAILS OF THE A.S.I. CHAIR, SEE DRAWING No. 4A.

THE ANGLE OF CROSSING IN 1" FIGURES TO BE STAMPED ON THE OUTSIDE OF THE WEB OF THE POINT AND WING RAILS, 2'-4" FROM FOOTPOINT END.

STANDARD RAILWAY EQUIPMENT — PERMANENT WAY.

OBTUSE ANGLE CROSSINGS 1 IN 4½ & 1 IN 5.

95 R. B. S. RAIL.

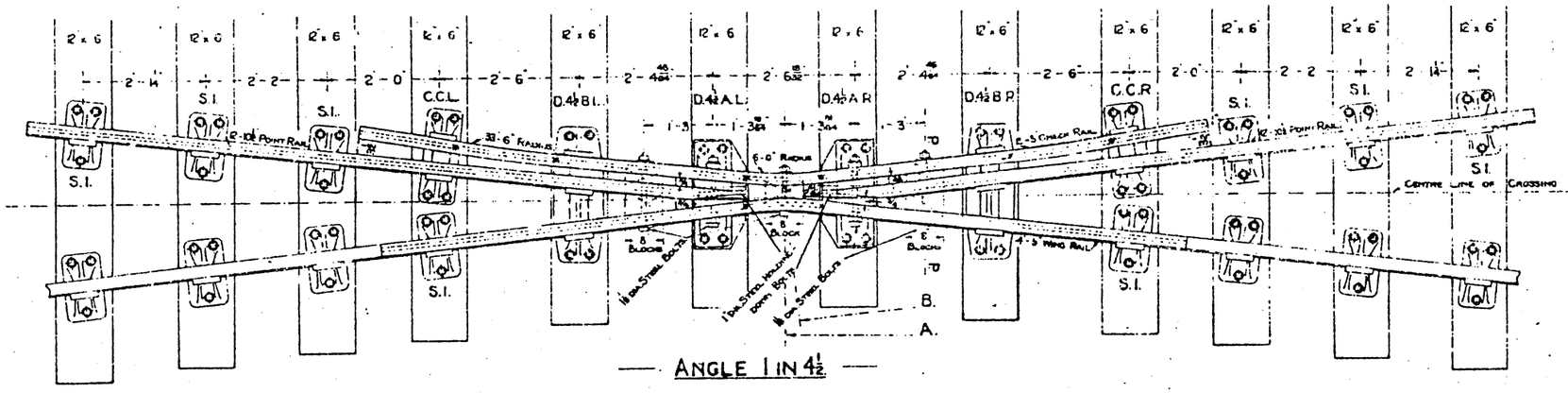

— ANGLE 1 IN 4½ —

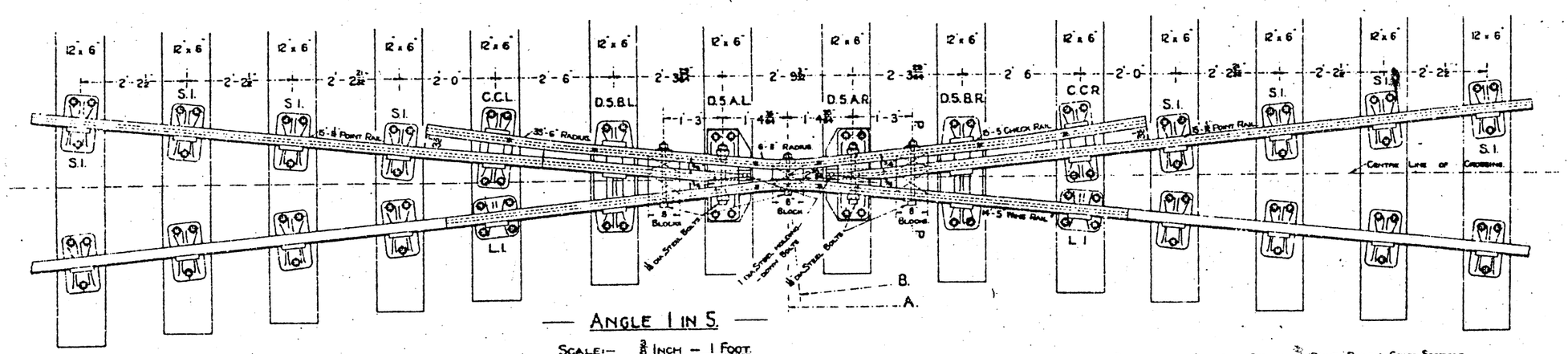

— ANGLE 1 IN 5 —

SCALE:— 3/8 INCH — 1 FOOT.

DIMENSIONS REFERRING TO DETAILS OF POINT RAILS & CROSS SECTIONS.

Angle of Crossing	a	b	c	d	e	f	Bearing Inclination
1 in 4½	8 3/8	9 3/4	1 3/8	12 10½	2 3/4	6 3/4	1 in 102
1 in 5	9 1/4	10 1/4	1 3/4	15 1/2	2 3/4	6 3/4	1 in 111

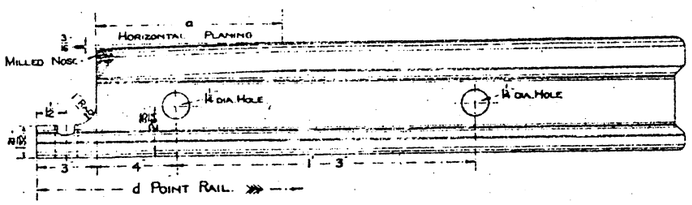

— ELEVATION. —

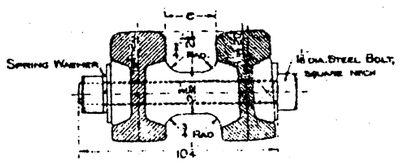

— SECTION THROUGH NECK —

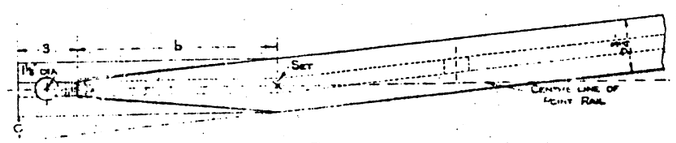

— PLAN. —

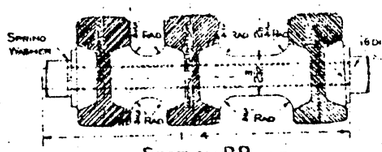

— SECTION P.P. —

— DETAILS OF POINT RAIL. —

SCALE — 1½ INCHES — 1 FOOT.

NOTES.

THE LENGTHS OF THE POINT RAILS SHEWN APPLY TO THE INTERSECTION OF STRAIGHT ROADS ONLY. IN THE CASE OF CURVED INTERSECTIONS THE LENGTH OF THE POINT RAILS WILL REQUIRE TO BE VARIED.

THE POINT RAIL TO BE VERTICAL FROM THE NOSE TO THE SET. FROM THE LATTER POINT THE RAIL IS TO BE GRADUALLY CANTED TOWARDS THE RUNNING SIDE UNTIL THE FULL INCLINATION OF 1 IN 20 FROM THE VERTICAL IS REACHED AT A DISTANCE OF FIVE FEET BACK FROM THE NOSE.

THE WING RAILS TO BE CANTED TOWARDS THE RUNNING SIDE AT AN INCLINATION OF 1 IN 20 FROM THE VERTICAL.

THE CHECK RAILS TO BE VERTICAL.

ALL BOLTS AND NUTS TO CONFORM TO THE BRITISH STANDARD SPECIFICATION Nº 64 AND TO BE FITTED WITH SPRING WASHERS.

THE LENGTHS OF THE POINT RAILS SHEWN ON THE DRAWINGS WILL JOIN UP TO THE WING RAILS OF THE COMMON CROSSINGS. THE LENGTHS A AND B ARE SHEWN IN THE 'TABLE OF INTERSECTION LENGTHS' ON DRAWING Nº 43.

THE FOLLOWING DETAILS APPLICABLE TO ALL OBTUSE ANGLE CROSSINGS APPEAR ON DRAWING Nº 43.
- "CRUSHING NOSE BEFORE AND AFTER MILLING."
- "HOLDING - DOWN BOLT, SADDLE AND WASHER PLATE."
- "C.I. WASHERS, ALSO CHAIR SCREW FOR BUILT - UP 'A' CHAIR FASTENINGS."

FOR DETAILS OF OBTUSE ANGLE CROSSING CHAIRS OTHER THAN C.C.R, C.C.L, S.I AND L.I, SEE DRAWING Nº 44.

FOR DETAILS OF THE C.C.R AND C.C.L CHAIRS, SEE DRAWING Nº 38.

FOR DETAILS OF THE S.I CHAIR, SEE DRAWING Nº 4.

FOR DETAILS OF THE L.I. CHAIR, SEE DRAWING Nº 6.

THE ANGLE OF CROSSING IN 1 FIGURES TO BE STAMPED ON THE OUTSIDE OF THE WEB OF THE POINT AND WING RAILS, 2' 4" FROM FISHJOINT END.

STANDARD RAILWAY EQUIPMENT — PERMANENT WAY.

OBTUSE ANGLE CROSSINGS 1 IN 5½ & 1 IN 6.

95 R. B. S. RAIL.

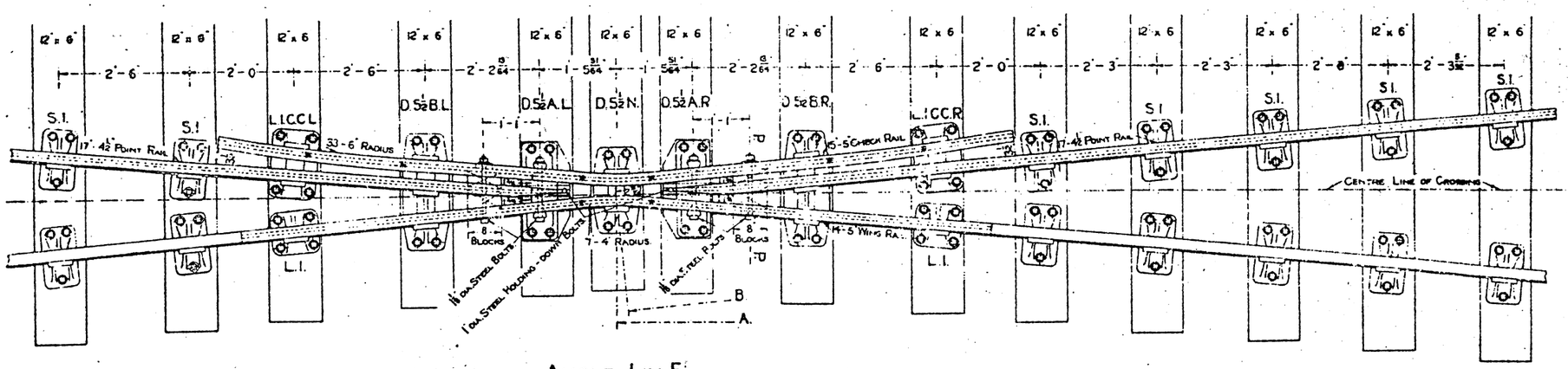

— ANGLE 1 IN 5½ —

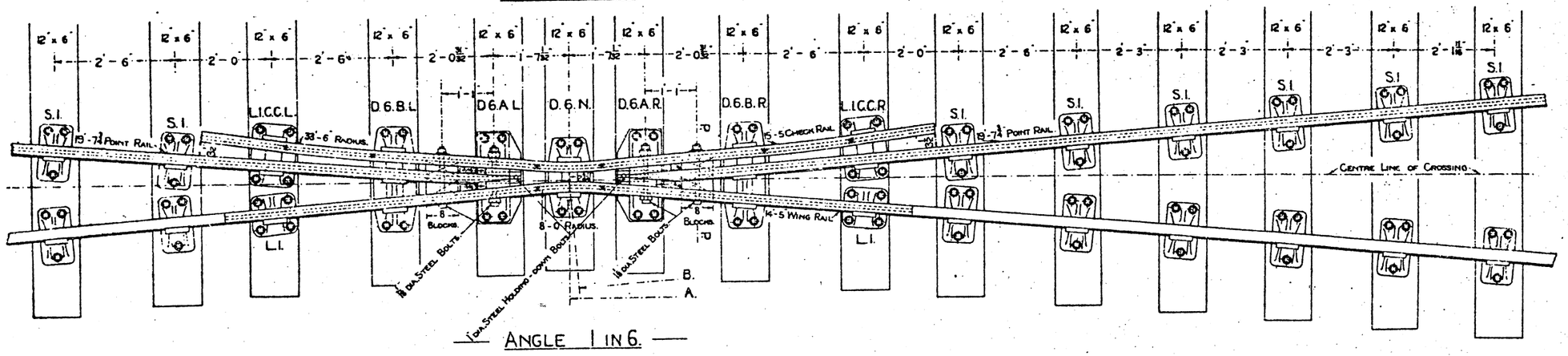

— ANGLE 1 IN 6. —

SCALE:— ¾ INCH = 1 FOOT.

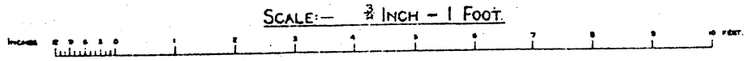

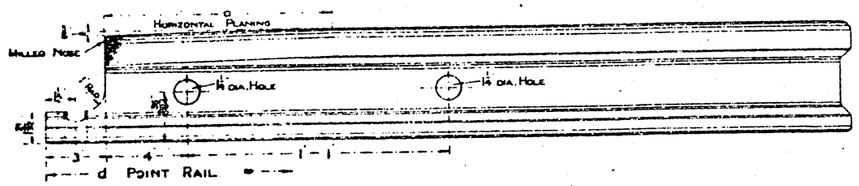

— ELEVATION. —

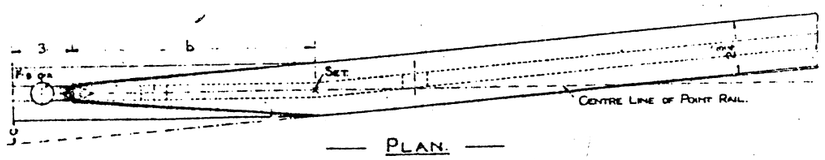

— PLAN. —

DIMENSIONS REFERRING TO DETAILS OF POINT RAIL & CROSS SECTION.

ANGLE OF CROSSING	a	b	c	d	f	VARYING INCLINATION
1 IN 5½	10¾	11¼	1¼	17'-4½	5⅝	1 IN 153
1 IN 6	11¼	12¼	1¼	19'-7¾	5⅝	1 IN 180.

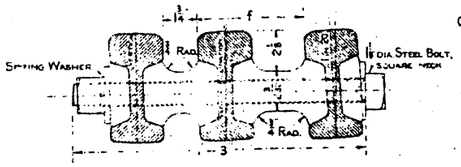

— SECTION P. P. —

— DETAILS OF POINT RAIL. —

SCALE: 1 INCHES = 1 FOOT.

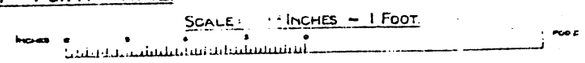

NOTES.

THE LENGTHS OF THE POINT RAILS SHEWN APPLY TO THE INTERSECTION OF STRAIGHT ROADS ONLY. IN THE CASE OF CURVED INTERSECTIONS THE LENGTH OF THE POINT RAILS WILL REQUIRE TO BE VARIED.

THE POINT RAIL TO BE VERTICAL FROM THE NOSE TO THE SET. FROM THE LATTER POINT THE RAIL IS TO BE GRADUALLY CANTED TOWARDS THE RUNNING SIDE UNTIL THE FULL INCLINATION OF 1 IN 20 FROM THE VERTICAL IS REACHED AT A DISTANCE OF FOUR FEET NINE INCHES BACK FROM THE NOSE.

THE WING RAILS TO BE CANTED TOWARDS THE RUNNING SIDE AT AN INCLINATION OF 1 IN 20 FROM THE VERTICAL.

THE CHECK RAILS TO BE VERTICAL.

ALL BOLTS AND NUTS TO CONFORM TO THE BRITISH STANDARD SPECIFICATION Nº 64 AND TO BE FITTED WITH SPRING WASHERS.

THE LENGTHS OF THE POINT RAILS SHEWN ON THE DRAWINGS WILL JOIN UP TO THE WING RAILS OF THE COMMON CROSSINGS.

THE LENGTHS A AND B ARE SHEWN IN THE "TABLE OF INTERSECTION LENGTHS" ON DRAWING Nº 43.

THE FOLLOWING DETAILS APPLICABLE TO ALL OBTUSE ANGLE CROSSINGS APPEAR ON DRAWING Nº 43.
"CROSSING NOSE BEFORE AND AFTER MILLING."
"HOLDING-DOWN BOLT, SADDLE AND WASHER PLATE."
"C.I. WASHERS, ALSO CHAIR SCREW FOR BUILT-UP 'A' CHAIR FASTENINGS."

FOR DETAILS OF OBTUSE ANGLE, CROSSING CHAIRS, SEE DRAWING Nº 44.

FOR DETAILS OF THE S.I. CHAIR, SEE DRAWING Nº 4.

FOR DETAILS OF THE L.I. CHAIR, SEE DRAWING Nº 6.

THE ANGLE OF CROSSING IN 1" FIGURES TO BE STAMPED ON THE OUTSIDE OF THE WEB OF THE POINT AND WING RAILS, 2'-4" FROM FISHJOINT END.

STANDARD RAILWAY EQUIPMENT — PERMANENT WAY.

Nº 42.

OBTUSE ANGLE CROSSINGS 1 IN 6½, 1 IN 7 & 1 IN 7½.

95 R. B. S. RAIL.

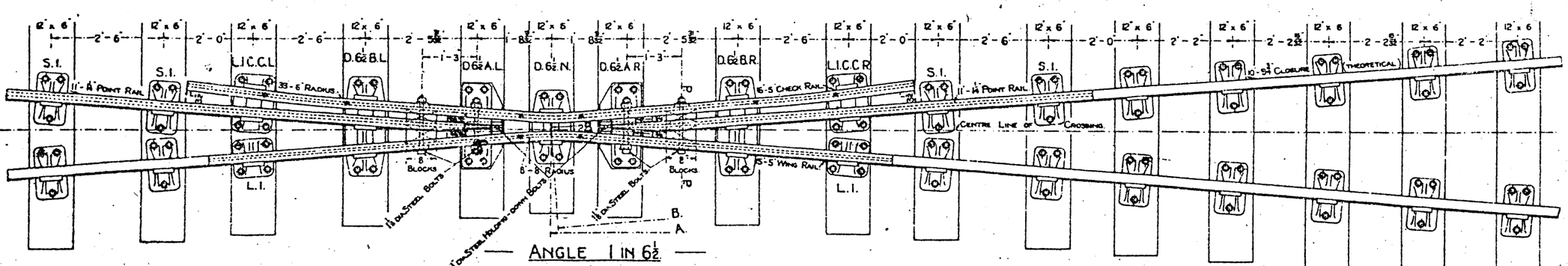

— Angle 1 in 6½ —

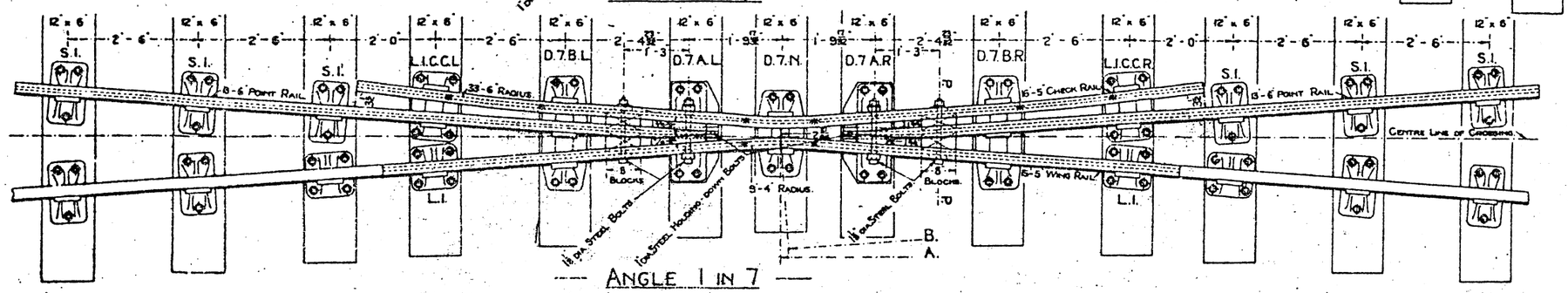

— Angle 1 in 7 —

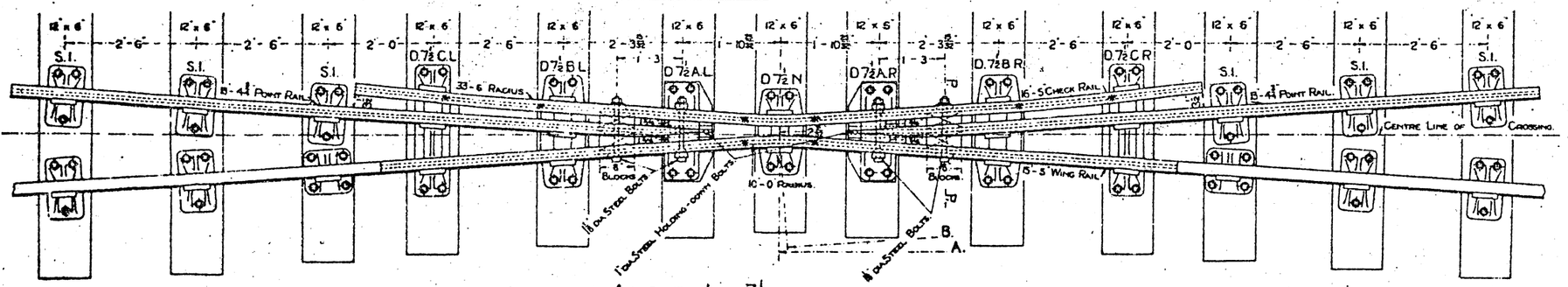

— Angle 1 in 7½ —

Scale:— 3/8 Inch — 1 Foot.

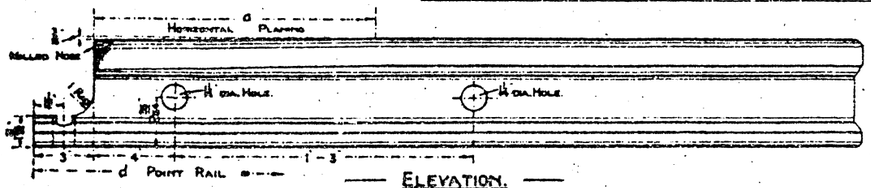

— Elevation.

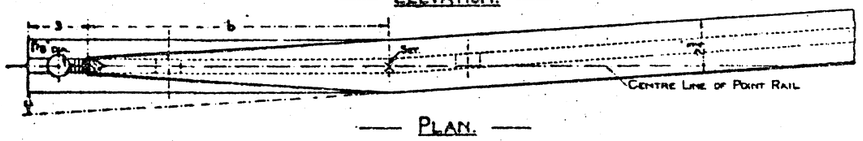

— Plan.

— Details of Point Rail. —

Scale:— 1½ Inches = 1 Foot.

Dimensions referring to Details of Point Rail & Cross Section.

Angle of Crossing	a	b	c	d	f	Varying Inclination.
1 in 6½	1'-0 1/16"	1'-1 1/16"	1 1/4"	11'-1"	5 5/32"	1 in 157
1 in 7	1'-1"	1'-2 1/16"	1 1/8"	13'-6"	5 5/32"	1 in 184
1 in 7½	1'-2 1/16"	1'-3 1/16"	1 1/16"	13'-4½"	5 5/32"	1 in 345

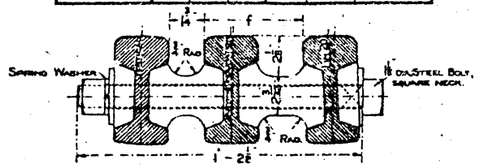

— Section P.P —

Notes:

The lengths of the Point Rails shewn apply to the intersection of straight roads only. In the case of curved intersections the length of the Point Rails will require to be varied.

The Point Rail to be vertical from the nose to the set. From the latter point the rail is to be gradually canted towards the running side until the full inclination of 1 in 20 from the vertical is reached at a distance of five feet back from the nose in the case of the 1 in 6½ and 1 in 7, and seven feet in the case of the 1 in 7½.

The Wing Rails to be canted towards the running side at an inclination of 1 in 20 from the vertical.

The Check Rails to be vertical.

All Bolts and Nuts to conform to the British Standard Specification Nº 64 and to be fitted with Spring Washers.

The length of closure shewn on the 1 in 6½ crossing will join up to the Wing Rails of the common crossing, and for the 1 in 7 and 1 in 7½ the lengths of closure rails required are 10'-8 7/32" and 8'-0 15/32" respectively, (theoretical).

The lengths A and B are shewn in the "Table of Intersection Lengths" on Drawing Nº 43.

The following Details applicable to all obtuse angle crossings appear on Drawing Nº 43.
"Crossing Nose before and after milling."
"Holding-down Bolt, Saddle and Washer Plate."
"C.I. Washers, also Chair Screw for built-up "A" Chair fastenings."

For Details of obtuse angle crossing chairs, see Drawing Nº 44.

For Details of the S.I. Chair see Drawing Nº 4.

For Details of the L.I. Chair see Drawing Nº 6.

The angle of crossing in figures to be stamped on the outside of the web of the Point and Wing Rails, 2'-4" from fishjoint end.

STANDARD RAILWAY EQUIPMENT — PERMANENT WAY. Nº 43.

OBTUSE ANGLE CROSSING 1 IN 8.

95 R. B. S. RAIL.

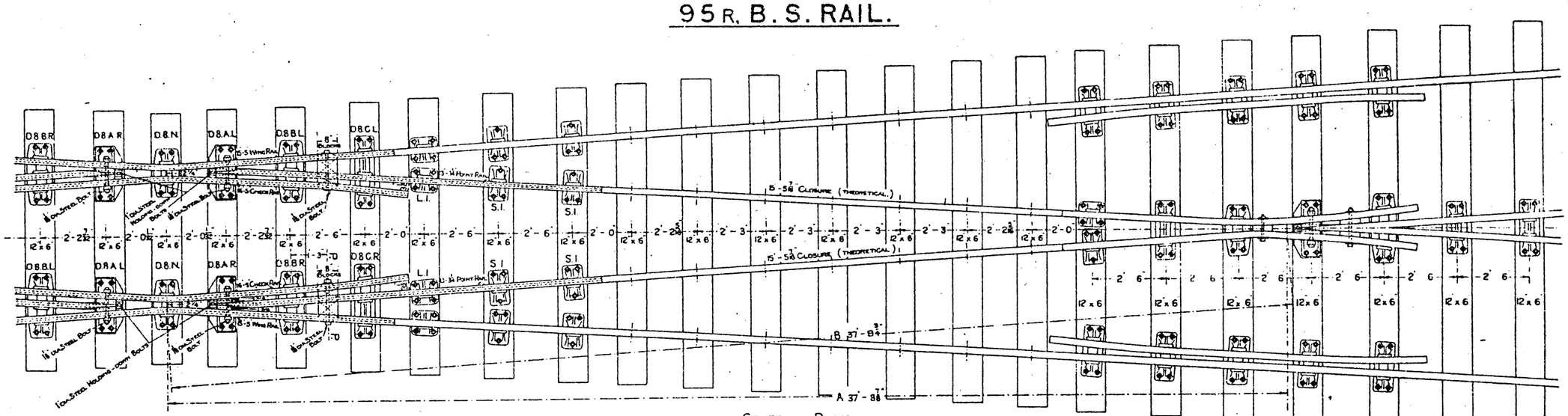

GENERAL PLAN.

SCALE:- ¼ INCH = 1 FOOT.

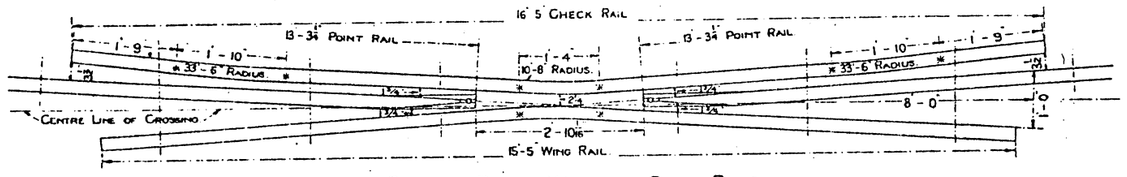

ENLARGED PLAN OF POINT, WING AND CHECK RAILS.

SCALE:- ⅛ INCH = 1 FOOT.

TABLE OF INTERSECTION LENGTHS.

Length	Angle 1 in 4	Angle 1 in 4½	Angle 1 in 5	Angle 1 in 5½	Angle 1 in 6	Angle 1 in 6½	Angle 1 in 7	Angle 1 in 7½	Angle 1 in 8
A.	18'-11¼"	21'-3 11/32"	23'-7 29/32"	26'-0 1/32"	28'-4 3/16"	30'-8 5/16"	33'-0 1/2"	35'-4 11/16"	37'-8 7/8"
B.	19'-1 17/32"	21'-5 3/8"	23'-9 5/16"	26'-1 5/16"	28'-5 31/32"	30'-9 7/16"	33'-1 1/2"	35'-5 9/16"	37'-9 3/4"

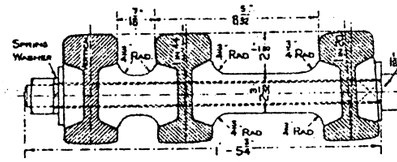

SECTION P.P.

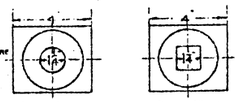

C.I. WASHERS FOR 1⅛ BOLTS.

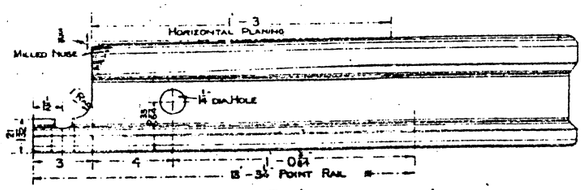

ELEVATION.

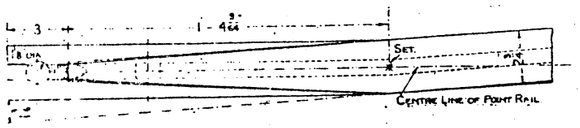

PLAN.

DETAILS OF POINT RAIL.

SCALE:- 1½ INCHES = 1 FOOT.

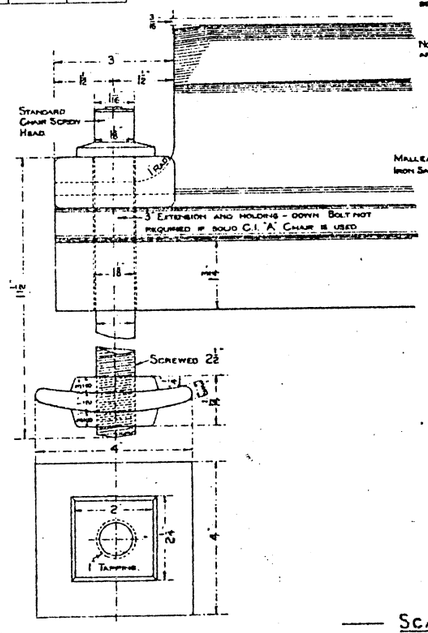

HOLDING-DOWN BOLT AND PLATE.

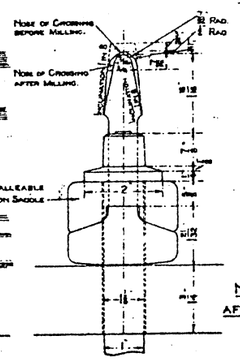

NOSE OF CROSSING.

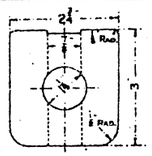

PLAN OF SADDLE.

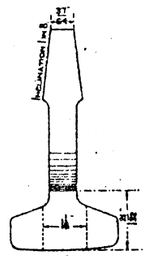

NOSE OF CROSSING AFTER SIDE PLANING.

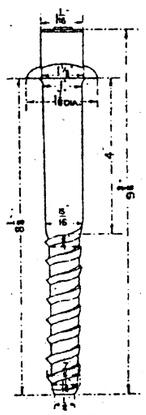

STEEL CHAIR SCREW FOR 'A' CHAIR FASTENINGS.

SCALE:- QUARTER FULL SIZE.

NOTES.

The lengths of the Point Rails shewn apply to the intersection of straight roads only. In the case of curved intersections the length of Point Rails will require to be varied.

The Point Rail to be vertical from the nose to the set. From the latter point the rail is to be gradually canted towards the running side until the full inclination of 1 in 20 from the vertical is reached at a distance of six feet nine inches back from the nose.

The Wing Rails to be canted towards the running side at an inclination of 1 in 20 from the vertical.

The Check Rails to be vertical.

All Bolts and Nuts to conform to the British Standard Specification Nº 64 and to be fitted with Spring Washers.

For Details of all obtuse angle crossing Chairs see Drawing Nº 44.

For Details of the S.I. Chair see Drawing Nº 4.

For Details of the L.I. Chair see Drawing Nº 6.

The angle of crossing in 1" figures to be stamped on the outside of the web of the Point and Wing Rails, 2'-4" from fishjoint end.

STANDARD RAILWAY EQUIPMENT. — PERMANENT WAY. — Nº 43A

SWITCH DIAMOND CROSSING 1 IN 12.

95R, B. S. RAIL.

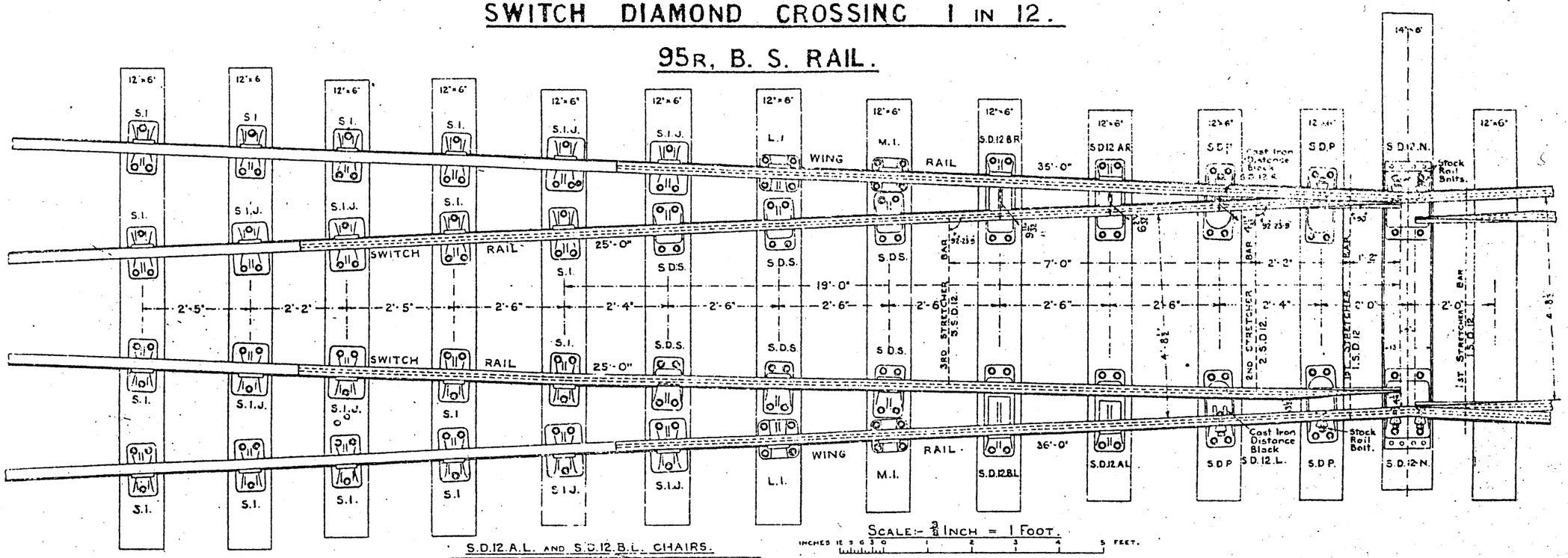

SCALE:- ¾ INCH = 1 FOOT.

INCHES 12 9 6 3 0 1 2 3 4 5 FEET.

S.D.12.A.L. AND S.D.12.B.L. CHAIRS.

CHAIR	a	b	c	d	e	APPROX WT
S D 12 A L	4 3/32"	6 27/32"	5 27/32"	6 11/32"	1'-10 15/32"	88 lb.
S D 12 B L	6 29/32"	9 11/32"	8 7/32"	8 27/32"	2'-1 3/32"	110 lb.

S. D. S. CHAIR.

Approx. Weight = 53 lb.

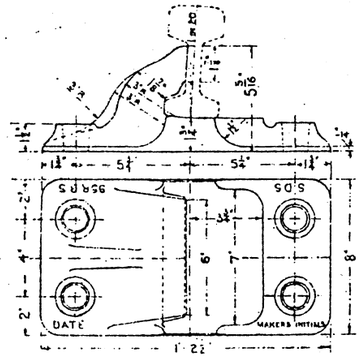

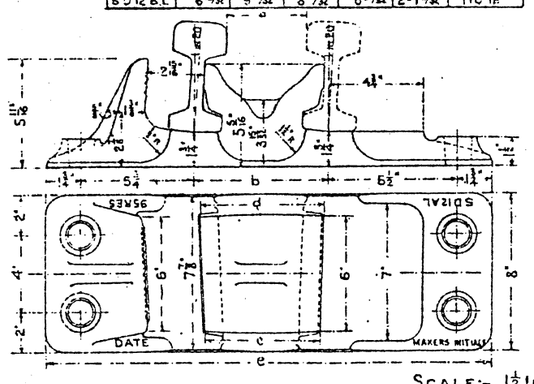

S.D.P. CHAIR.

Approx. Weight = 73 lb.

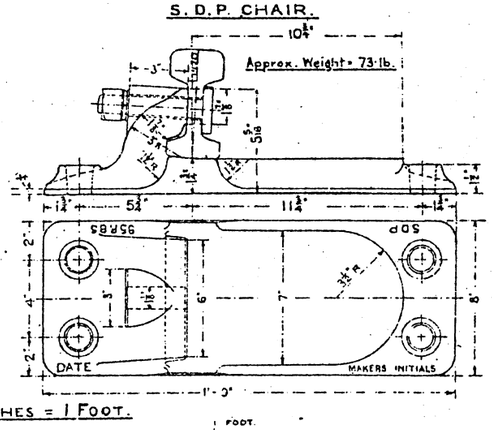

S.D.12.N. CHAIR.

Approx. Weight = 114 lb.

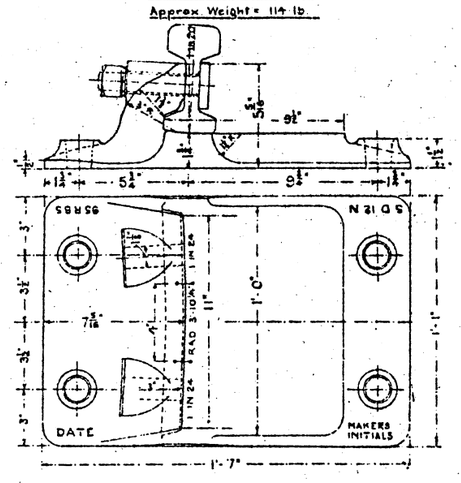

SCALE:- 1½ INCHES = 1 FOOT.

INCHES 12 9 6 3 0 FOOT.

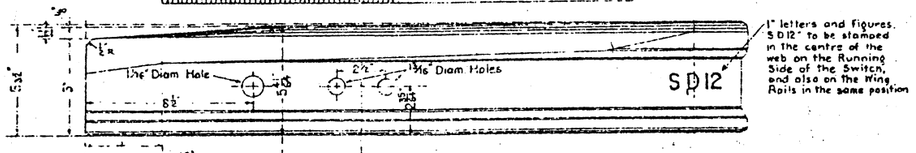

ELEVATION AT END OF SWITCH.

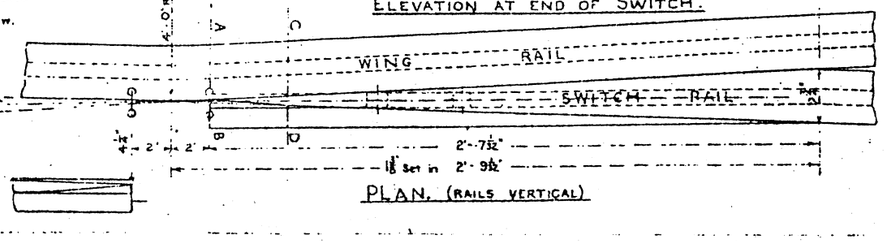

PLAN. (RAILS VERTICAL)

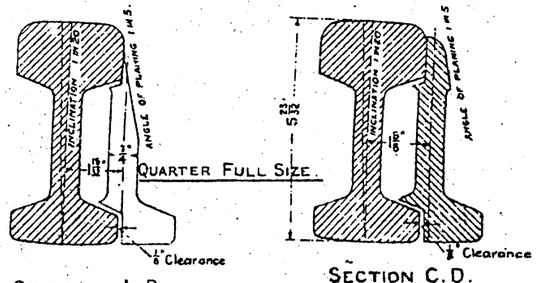

SECTION A.B. SECTION C.D.

NOTES.

The Rail Jaws of the S D 12 A. and S D 12 B chairs to conform to the profile of the rail jaw of the S I chair (Drawing Nº 4) subject, however, to the essential difference in the horizontal inclination necessitated by the angle of the crossing. The width of jaws to be 6 inches.

The details of the key jaws of the S.D 12.A. and S D.12 B. chairs to conform to the profile of the key jaw shewn on Drawing Nº 18, subject to the essential difference in the horizontal inclination necessitated by the angle of the crossing. The width of jaws to be 5 inches.

The horizontal dimensions appearing in the elevation drawings apply in every case to the centre of the chairs.

The dimensions shewn on this drawing for L.H. chairs apply also to the corresponding R.H. chairs.

For details of Stretcher Bars, Soleplate, Cast Iron Distance Blocks, and Stock Rail Bolts, see Drawing Nº 274.

The holes in the chair bases to take the Standard Ferrule and Screw.

Designating letters, date of manufacture, makers initials, and weight of rail designed for, to be cast on each chair.

For details of S. I. Chair, see Drawing Nº 4.
" " " S.I.J. " " " " 5
" " " L.I. " " " " 6
" " " M.I. " " " " 47

STANDARD RAILWAY EQUIPMENT — PERMANENT WAY.

CHAIRS FOR OBTUSE ANGLE CROSSINGS.

95 R. B. S. RAIL.

D. N. CHAIR.
CROSSINGS 1 IN 5½ TO 1 IN 8.

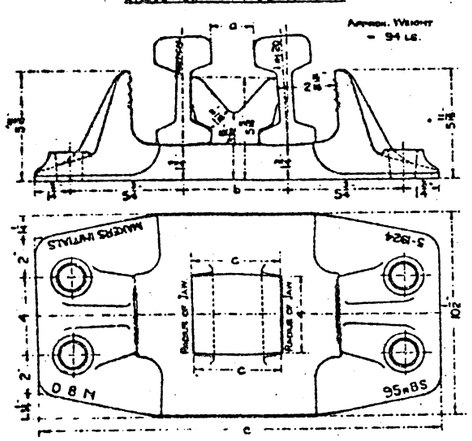

BUILT UP D. A. R. CHAIR.
CROSSINGS 1 IN 4 TO 1 IN 8.

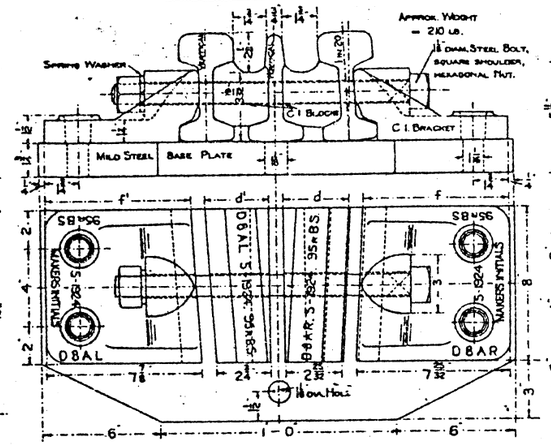

SOLID CAST IRON D. A. R. CHAIR.
CROSSINGS 1 IN 4 TO 1 IN 8.

NOTE:- WHEN THIS CHAIR IS USED THE 3 EXTENSION OF POINT RAIL FOR HOLDING-DOWN BOLT IS NOT REQUIRED.

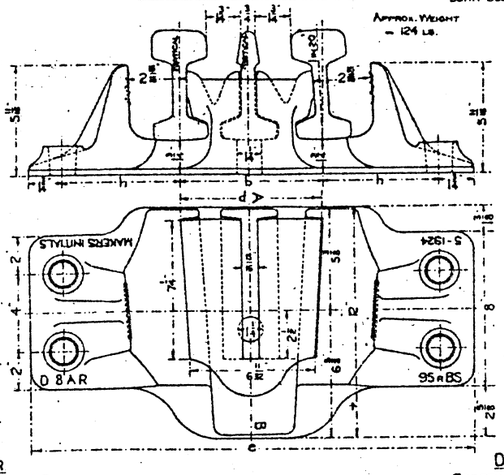

SECTION A. B.

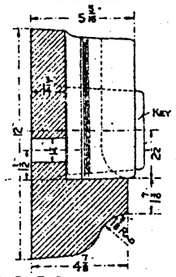

L. I. C. C. R.

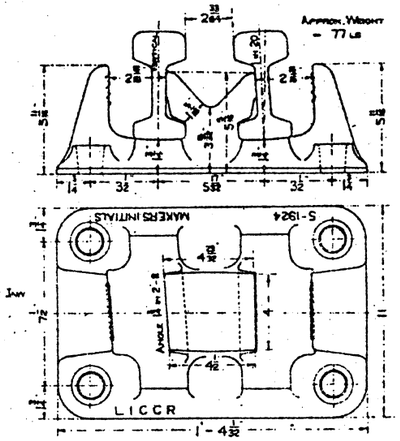

D. B. R. CHAIR.
CROSSINGS 1 IN 4 TO 1 IN 6½.

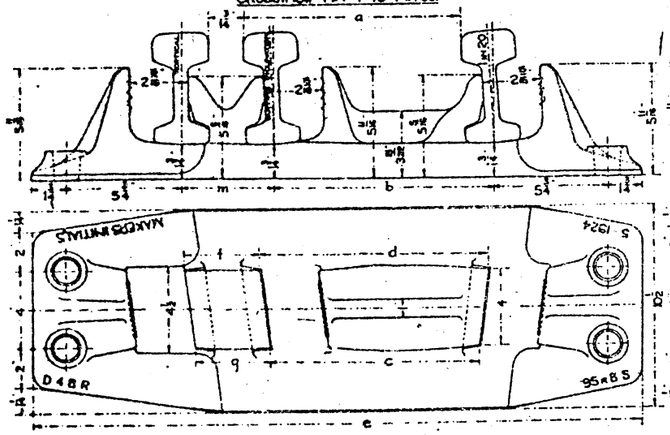

D. B. R. CHAIR
CROSSINGS 1 IN 7 TO 1 IN 8.

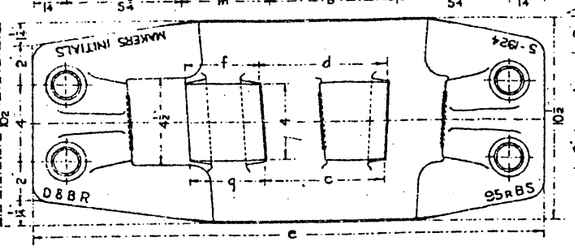

D. C. R. CHAIR.
CROSSINGS 1 IN 7½ AND 1 IN 8.

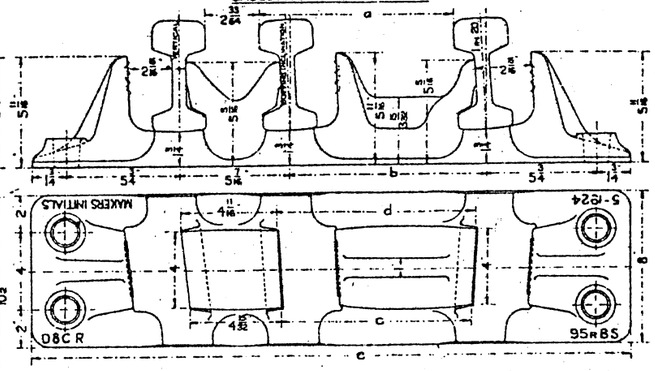

DIMENSIONS OF BUILT-UP D. A. R. CHAIRS.

Crossing	d	d'	f	f'
1 in 4	3 17/32	3 3/4	6 23/32	6 7/8
1 in 4½	3 23/32	3 7/8	6 29/32	7
1 in 5	3 29/32	3 9/16	6 31/32	7 1/16
1 in 5½	3 9/16	3 15/32	7 1/16	7 5/32
1 in 6	3 1/2	3 21/32	7 1/8	7 7/32
1 in 6½	3 15/32	3 5/8	7 5/32	7 1/4
1 in 7	3 19/32	3 11/16	7 7/32	7 3/16
1 in 7½	3 5/8	3 23/32	7 1/4	7 11/32
1 in 8	3 11/32	3 3/4	7 9/32	7 3/8

DIMENSIONS OF SOLID C. I. D. A. R. CHAIRS.

Crossing	b	d	e	h
1 in 4	7 3/32	8 3/32	1-10 29/32	6 5/16
1 in 4½	7 5/16	7 29/32	1-10 29/32	6 5/32
1 in 5	7 5/32	7 15/16	1-10 29/32	6
1 in 5½	7 3/32	7 29/32	1-10 29/32	5 31/32
1 in 6	7 1/4	7 15/16	1-10 29/32	5 31/32
1 in 6½	7 1/4	7 29/32	1-10 29/32	5 15/16
1 in 7	7 1/4	7 15/16	1-10 29/32	5 29/32
1 in 7½	7 1/4	7 15/16	1-10 29/32	5 27/32
1 in 8	7 1/4	7 1/4	1-10 29/32	5 23/32

DIMENSIONS OF D. B. R. CHAIRS.

Crossing	a	b	c	d	e	f	g	m	Approx. Weight	Varying Inclination
1 in 4	11	11 1/16	10 1/32	11 17/32	2-6 25/32	3 13/16	3 13/16	4 21/32	141 lb.	1 in 40
1 in 4½	9 29/32	9 29/32	9 1/32	10 9/32	2-5 17/32	3 9/16	3 13/16	4 5/8	139	1 in 43
1 in 5	8 5/16	8 5/16	8 5/32	9 1/4	2-4 5/16	3 3/16	3 9/16	4 5/8	137	1 in 46
1 in 5½	8	8 1/8	7 15/16	8 21/32	2-3 3/4	3 1/16	3 5/16	4 5/16	135	1 in 47
1 in 6	7 23/32	7 25/32	7 7/32	7 31/32	2-3 3/32	3 1/32	3 1/32	4 1/32	132	1 in 53
1 in 6½	7 17/64	7 7/8	7 1/32	8 1/32	2-3 1/32	3 1/32	3 1/32	4 1/8	129	1 in 45
1 in 7	7 1/64	7 5/16	6 15/16	7 17/32	2-2 29/32	3 1/32	3 1/32	4 1/32	126	1 in 49
1 in 7½	6 11/32	6 7/8	6 7/32	7 1/32	2-2 7/16	3 1/32	3 1/32	4 1/16	123	1 in 84
1 in 8	6 5/32	6 3/16	6 3/32	6 29/32	2-2 1/32	3 1/32	3 1/32	4 1/16	120	1 in 91

DIMENSIONS OF D. N. CHAIRS.

Crossing	a	b	c	e	Radii of Jaw
1 in 5½	2 31/64	5 1/2	4 5/8	1-8 1/2	7-4
1 in 6	2 27/64	5 1/16	4 9/16	1-8 7/16	8-0
1 in 6½	2 23/64	5 3/8	4 1/2	1-8 3/8	8-8
1 in 7	2 21/64	5 11/32	4 7/16	1-8 11/32	9-4
1 in 7½	2 9/32	5 9/32	4 13/32	1-8 3/32	10-0
1 in 8	2 1/4	5 1/4	4 3/8	1-8 1/4	10-8

DIMENSIONS OF D. C. R. CHAIRS.

Crossing	a	b	c	d	e	Approx. Weight	Varying Inclination
1 in 7½	10 11/16	10 25/32	10 5/32	11	2 7/32	118 lb.	1 in 30
1 in 8	10 5/32	10 1/32	9 13/16	10 5/16	2-8 17/32	115	1 in 29

SCALE: 1½ INCHES = 1 FOOT

NOTES.

THE RAIL JAW OF ALL CROSSING CHAIRS TO CONFORM TO THE PROFILE OF THE RAIL JAW OF THE S.I. CHAIR (DRAWING N° 4) SUBJECT, HOWEVER, TO THE ESSENTIAL DIFFERENCE IN THE HORIZONTAL INCLINATION NECESSITATED BY THE ANGLE OF THE CROSSING.

THE DETAILS OF THE KEY JAW ARE SHEWN ON DRAWING N° 38 AND THIS DRAWING IS TYPICAL OF KEY JAWS FOR ALL CROSSING CHAIRS, SUBJECT TO THE ESSENTIAL DIFFERENCE IN THE HORIZONTAL INCLINATION NECESSITATED BY THE ANGLE OF THE CROSSING AND SUBJECT ALSO TO THE HEIGHT BEING 5¼ INSTEAD OF 5 11/16 IN THE CASE OF THE POINT RAIL KEY JAWS OF D.B.R. CHAIR, CROSSINGS 1 in 7 TO 1 in 8.

THE JAWS OF THE L.I.C.C.R TO CONFORM TO THE PROFILE OF THE JAWS OF THE L.I CHAIR (DRAWING N° 6) SUBJECT TO THE ESSENTIAL DIFFERENCE IN THE HORIZONTAL INCLINATION NECESSITATED BY THE ANGLE OF THE CHECK RAIL WITH THE POINT RAIL.

THE DETAILS OF THE C.I. BRACKETS FOR THE BUILT UP A CHAIR ARE SHEWN ON DRAWING N° 36 AND THIS DRAWING IS TYPICAL OF THE BRACKETS FOR ALL CROSSINGS, SUBJECT TO THE ESSENTIAL DIFFERENCE IN THE HORIZONTAL INCLINATION NECESSITATED BY THE ANGLE OF THE CROSSING.

THE HORIZONTAL DIMENSIONS APPEARING IN THE ELEVATION DRAWINGS ARE THOSE OBTAINING IN THE CENTRE OF THE CHAIR, EXCEPTING IN THE CASE OF THE A CHAIRS WHICH LATTER ARE TAKEN NOT AT THE CENTRE OF THE CHAIR BUT AT THE POINT OF THE CROSSING.

THE DIMENSIONS SHEWN ON THE DRAWINGS FOR THE RIGHT HAND CHAIRS APPLY ALSO TO THE CORRESPONDING LEFT HAND CHAIRS

THE HOLES IN THE CHAIR BASES TO TAKE THE STANDARD FERRULL AND SCREW

THE NUMBER OF THE CROSSING TO BE CAST ON EACH SPECIAL CHAIR, IN FRONT OF THE CHAIR LETTER AND THE LETTER R OR L AFTER THE CHAIR LETTER, TO INDICATE FOR WHICH ANGLE OF CROSSING AND WHETHER RIGHT OR LEFT HAND, IT HAS BEEN DESIGNED. THE DATE OF MANUFACTURE, MAKERS INITIALS AND WEIGHT OF RAIL DESIGNED FOR ARE ALSO TO BE CAST ON EACH CHAIR.

STANDARD RAILWAY EQUIPMENT — PERMANENT WAY.

Nº 45.

1 IN 8 OBTUSE ANGLE CROSSING WITH SINGLE & DOUBLE SLIP ROADS.

95 R. B. S. RAIL.

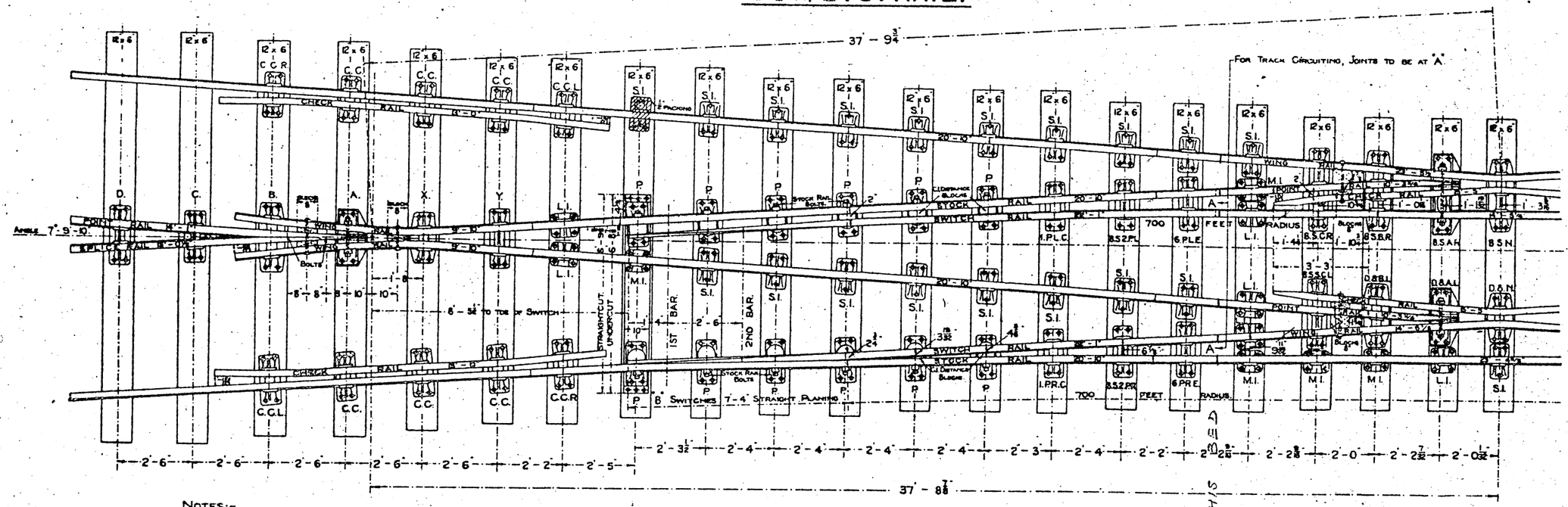

NOTES:-

For Details of 1 in 8 Single and Double Slip Chairs, see Drawing Nº 46.
" " 1 in 8 Common Crossing, see Drawing Nº 32.
" " 1 in 8 Common Crossing Chairs, see Drawing Nºs 36, 37, 38.
" " 1 in 8 Obtuse Angle Crossing, see Drawing Nº 43.
" " 1 in 8 Obtuse Angle Crossing Chairs, see Drawing Nº 44.
" " 8" Undercut Switches, see Drawing Nº 9.
" " 8" Straightcut Switches, see Drawing Nº 14.
" " Switch Chairs, see Drawing Nº 18.
" " Stretcher Bars, see Drawing Nºs 22, 23, 26, 27.
" " Switch Anchor, C.I. Distance Blocks, Stock Rail and Stud Bolts, see Drawing Nº 19.
" " S.I. Chair, see Drawing Nº 4.
" " L.I. Chair, see Drawing Nº 6.
" " M.I. Chair, see Drawing Nº 47.

JOINTS ALL IN THIS AREA

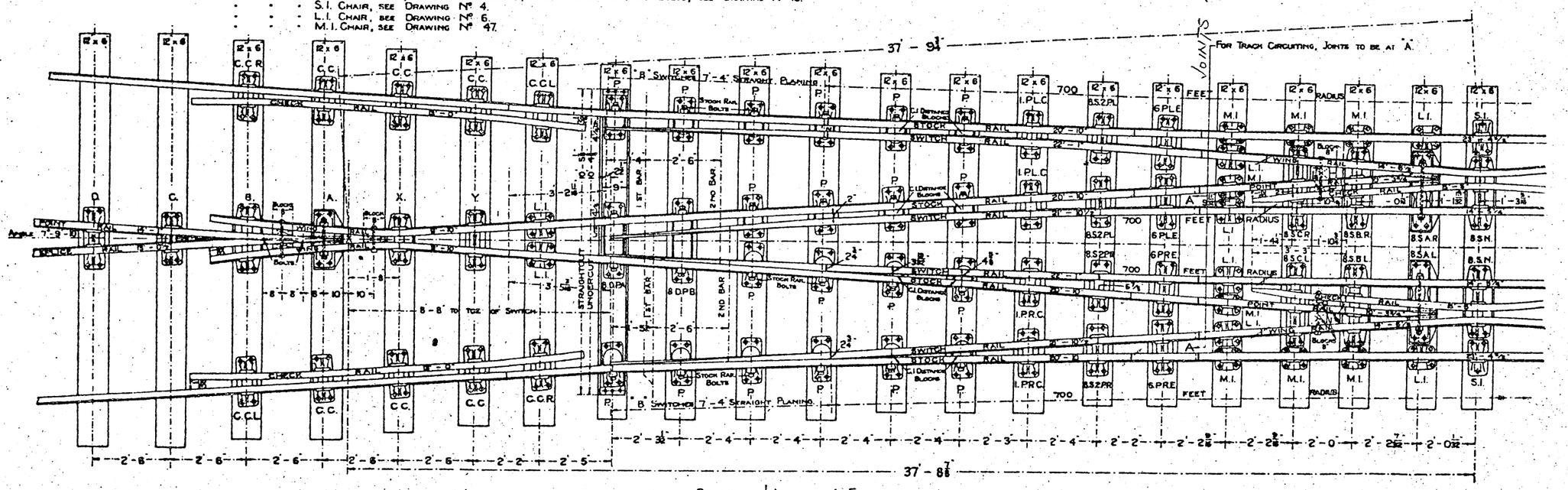

Scale:- ¼ Inch = 1 Foot.

STANDARD RAILWAY EQUIPMENT — PERMANENT WAY.

1 IN 7 OBTUSE ANGLE CROSSING WITH SINGLE & DOUBLE SLIP ROADS.

95 R. B. S. RAIL.

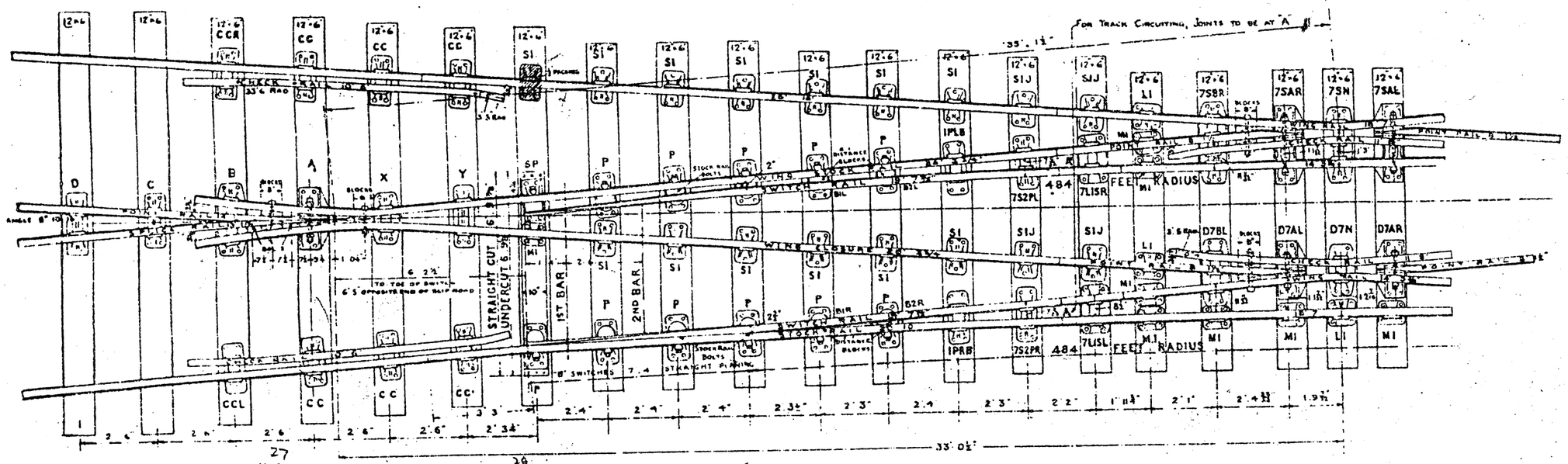

27 29 35 33 21 40

NOTES:-

For Details of 1 in 7 Single and Double Slip Chairs, see Drawing Nº 46A
" " " 1 in 7 Common Crossing, See Drawing Nº 31
" " " 1 in 7 Common Crossing Chairs, See Drawings Nºs 36 37 38
" " " 1 in 7 Obtuse Angle Crossing, See Drawing Nº 42
" " " 1 in 7 Obtuse Angle Crossing Chairs, see Drawing Nº 44
" " " "B" Undercut Switches, see Drawing Nº 9
" " " "B" Straightcut Switches, see Drawing Nº 14
" " " Switch Chairs, see Drawing Nº 18
" " " Switch Anchor, C.I. Distance Blocks, Stock Rail and Stud Bolts, see Drawing Nº 19
" " " S.I Chair, see Drawing Nº 4
" " " L.I Chair, see Drawing Nº 6
" " " M.I Chair, see Drawing Nº 47
" " " Stretcher Bars, see Drawings Nºs 20 to 27

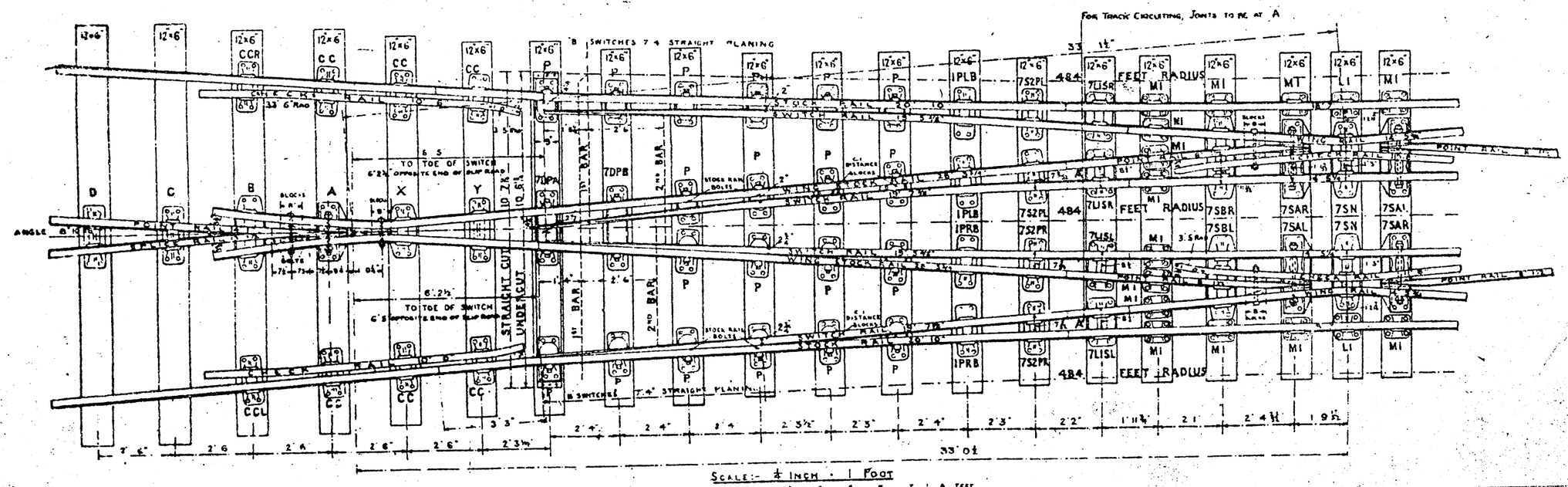

Scale:- ¼ Inch = 1 Foot

STANDARD RAILWAY EQUIPMENT — PERMANENT WAY.

No. 45B

1 IN 7½ OBTUSE ANGLE CROSSING WITH SINGLE & DOUBLE SLIP ROADS.

95 R. B. S. RAIL.

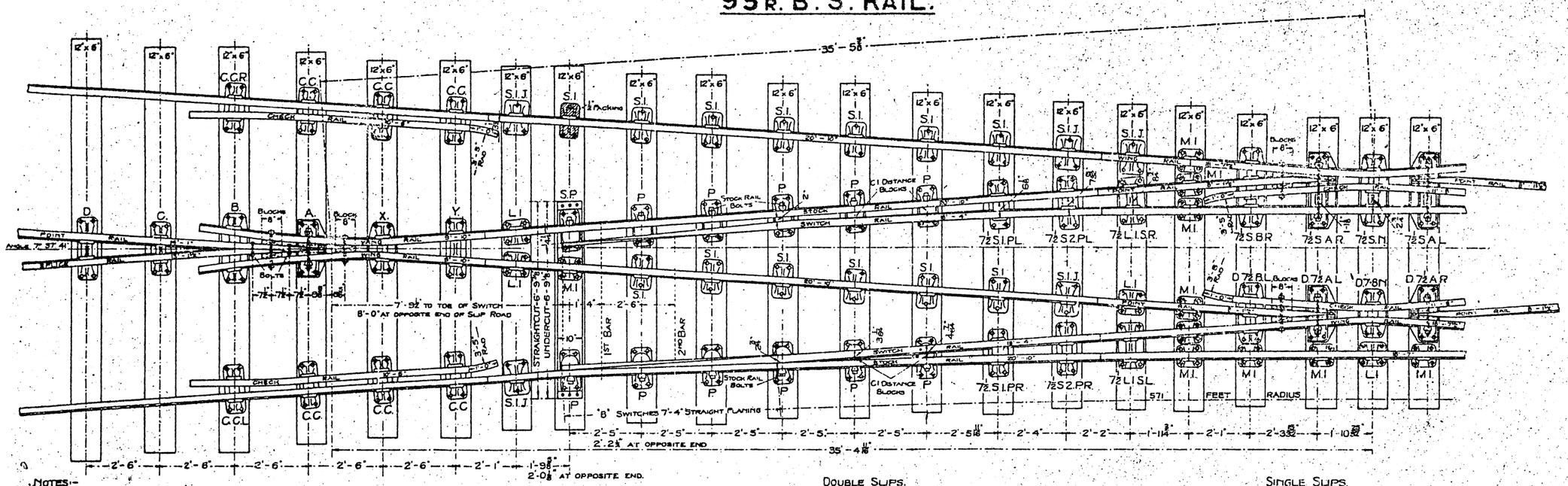

NOTES:-

- For details of 1 in 7½ Single and Double Slip Chairs, see Drawing No. 46B
- " " " 1 in 7½ Common Crossing, see Drawing No. 31
- " " " 1 in 7½ Common Crossing Chairs, see Drawing Nos. 36, 37 and 38.
- " " " 1 in 7½ Obtuse Angle Crossing, see Drawing No. 42.
- " " " 1 in 7½ Obtuse Angle Crossing Chairs, see Drawing No. 44.
- "8" Undercut Switches, see Drawing No. 5.
- "B" Straightcut Switches, see Drawing No. 14
- Switch Chairs, see Drawings Nos. 18, 18A and 46A.
- Switch Anchor, C.I. Distance Blocks, Stock Rail and Stud Bolts see Drawing No. 19.
- S.I. Chair see Drawing No. 4.
- L.I. Chair see Drawing No. 6.
- M.I. Chair see Drawing No. 47.
- Stretcher Bars see Drawings No. 23, 27, 23B.
- Soleplates see Drawing No. 23C

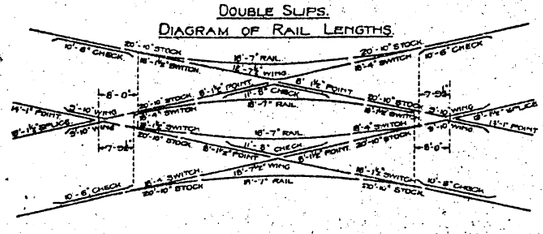

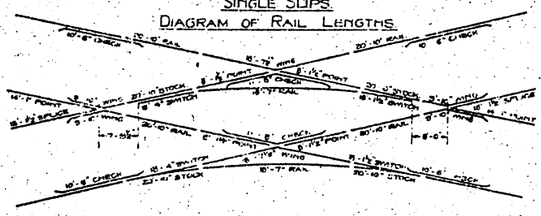

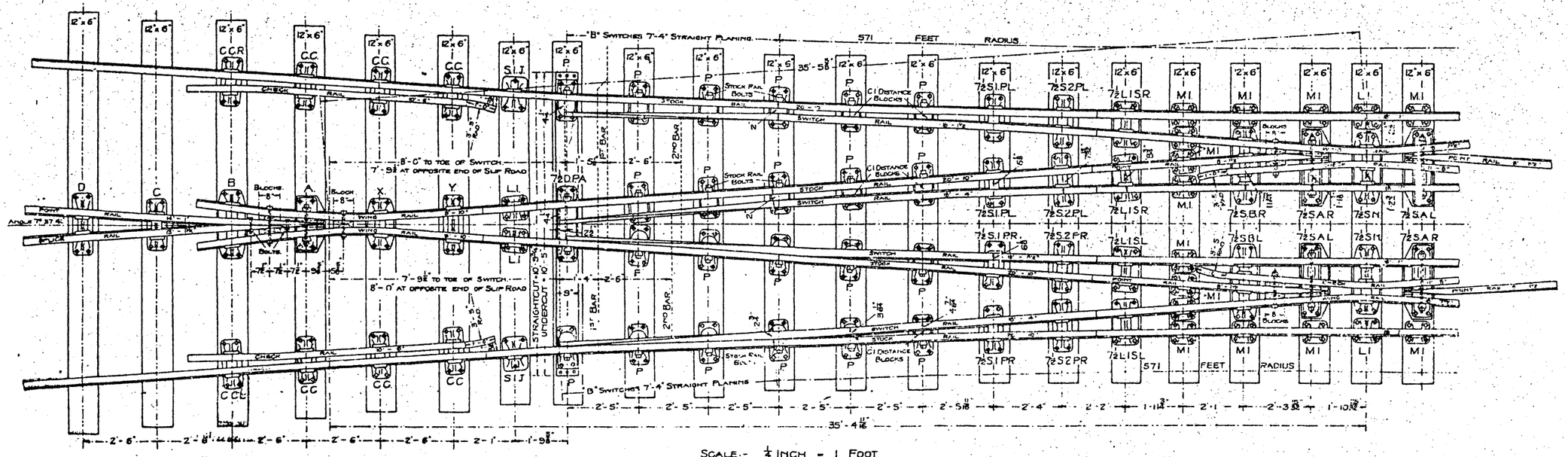

Scale.- ¼ Inch = 1 Foot

Inches 12 9 6 3 0 1 2 3 4 5 6 7 8 Feet

STANDARD RAILWAY EQUIPMENT — PERMANENT WAY.

Nº 45c

1 IN 10 SCISSORS CROSSOVER.

95R. B.S. RAIL.

GENERAL ARRANGEMENT.

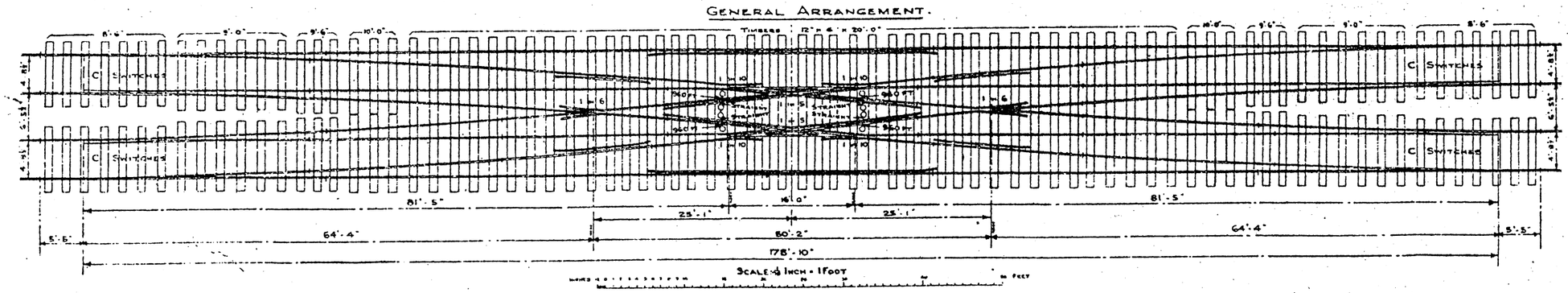

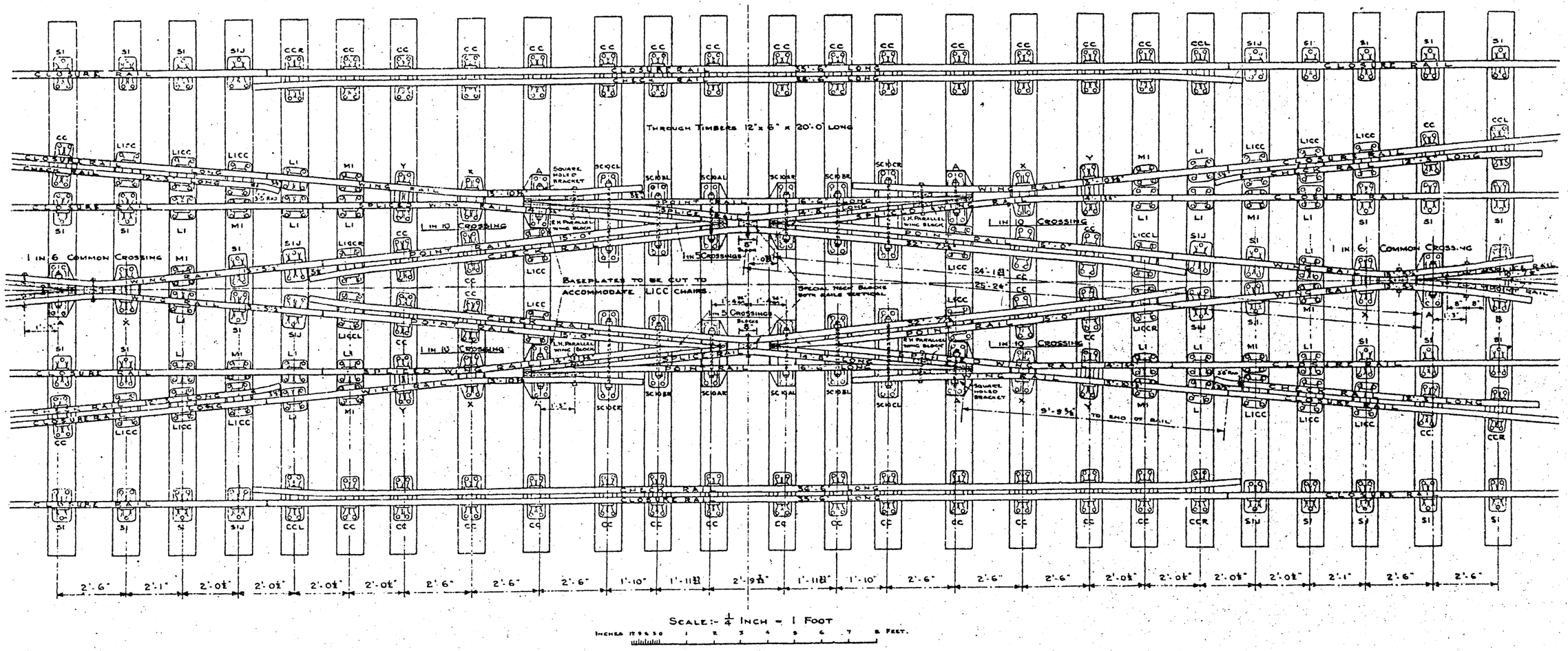

DETAILS OF CENTRE OF SCISSORS.

FOR DETAILS OF 1 in 5 COMMON CROSSING	SEE DRAWING Nº	29
" " " 1 in 6 COMMON CROSSING	SEE DRAWING Nº	30
" " " 1 in 10 COMMON CROSSING	SEE DRAWING Nº	33
" " "C" SWITCHES	SEE DRAWING Nº	10
" (TYPE) " " SWITCH CHAIRS	SEE DRAWING Nº	18
" " " STRETCHER BARS	SEE DRAWING Nº	20, 21, 22
" " " SWITCH ANCHOR, R.I. DISTANCE BLOCKS, STOCK RAIL AND STUB BOLTS.	SEE DWG Nº	19

FOR DETAILS OF S.I. CHAIR	SEE DRAWING Nº	4
" " " CHECK CHAIR	" "	38
" " " L.I. CHAIR	" "	6
" " " LICC. CHAIR	" "	36A & 44
" " " M.I. CHAIR	" "	47
" " " S.I.J. CHAIR	" "	5
" " " SPECIAL SCISSORS CHAIRS	SEE DRAWING Nº	46C

STANDARD RAILWAY EQUIPMENT — PERMANENT WAY.

Nº 46.

CHAIRS FOR 1 IN 8 OBTUSE ANGLE CROSSING WITH SINGLE & DOUBLE SLIP ROADS.

95 R. B. S. RAIL.

DIMENSIONS OF 8 D.P.A AND 8 D.P.B CHAIRS

Chair	Switch	a	b	c	d	e	Approx Wt
8 D.P.A.	Undercut	1'-1 1/8"	1'-4 3/8"	1'-4 17/32"	1'-5 5/32"	2'-7 3/8"	116 lb
	Straightcut	1'-1 27/32"	1'-5 1/8"	1'-5 5/16"	1'-5 23/32"	2'-8 1/8"	118 lb
8 D.P.B.	Undercut	1'-4 3/16"	1'-7 15/16"	1'-7 31/32"	1'-8 15/32"	2'-10 15/16"	126 lb
	Straightcut	1'-5 1/32"	1'-8 9/32"	1'-8 15/32"	1'-8 7/8"	2'-11 9/32"	128 lb

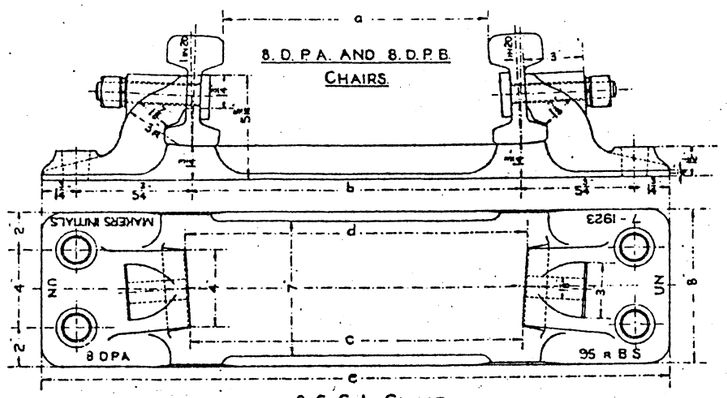

8. S. S. C. L. CHAIR.
Approx. Weight — 114 lb.

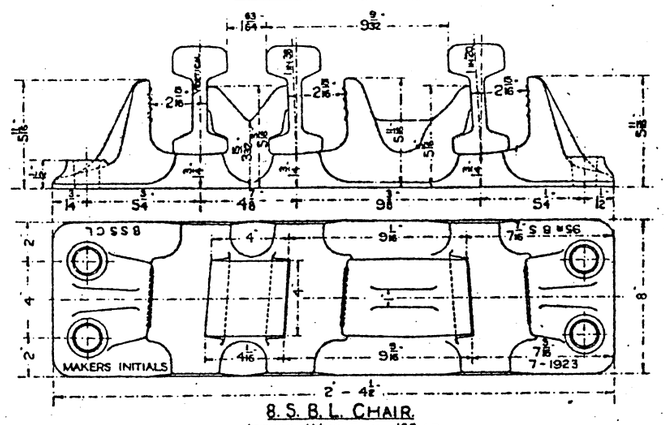

8. S. 2 P.R. CHAIR
Approx. Weight — 79 lb.

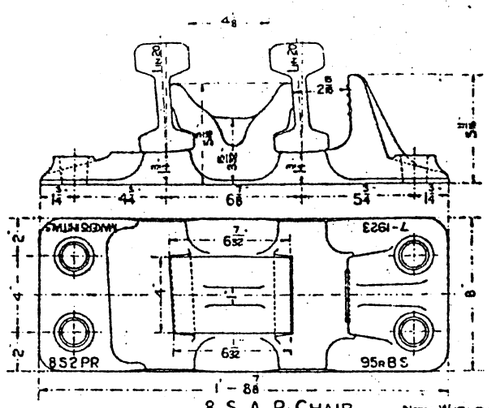

8. S. C. L. CHAIR.
Approx. Weight — 141 lb.

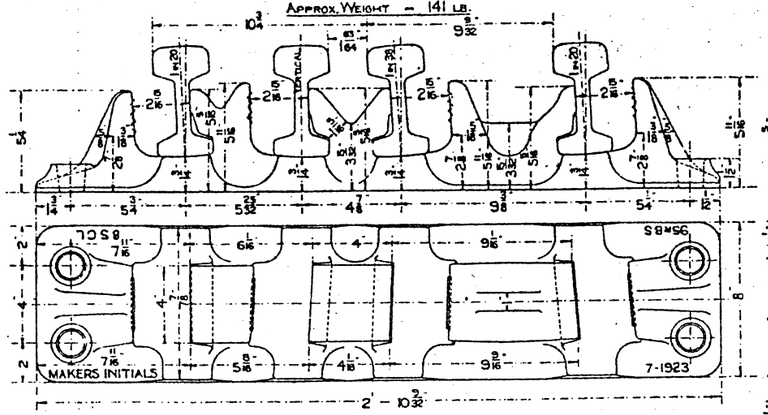

8. S. B. L. CHAIR.
Approx. Weight — 180 lb.

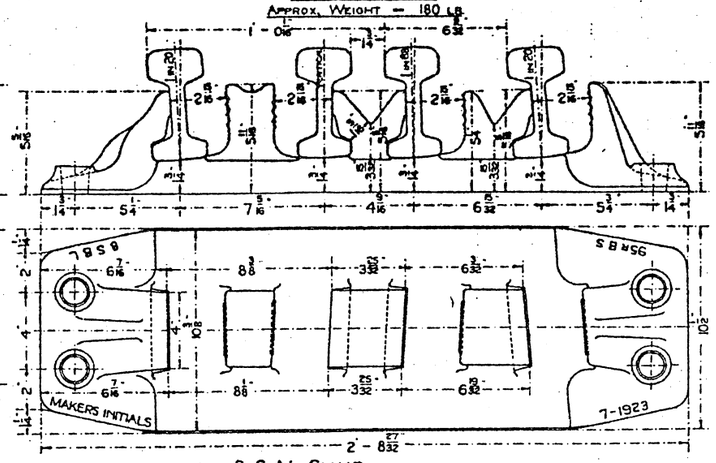

8. S. A. R. CHAIR
Approx. Weight — 152 lb.

Note: When this Chair is used the 3 extension of Point Rail, for holding-down bolt is not required.

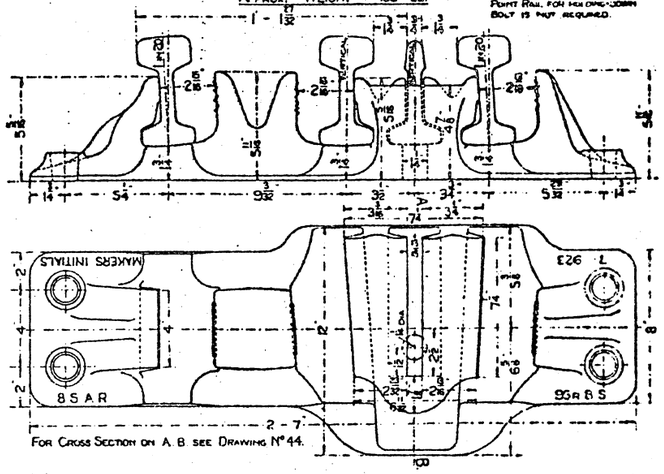

For Cross Section on A. B. see Drawing Nº 44.

For Details of C. I. Brackets see Drawing Nº 36.

8. S. A. R. CHAIR (BUILT UP)
Approx. Weight — 300 lb.

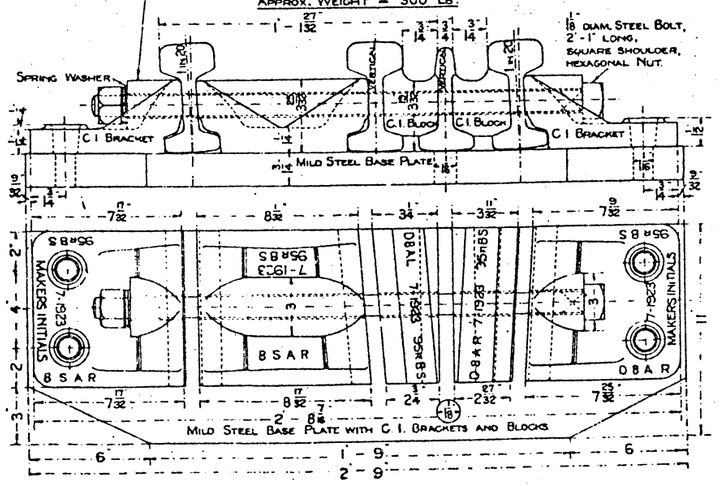

8. S. N. CHAIR
Approx. Weight — 160 lb.

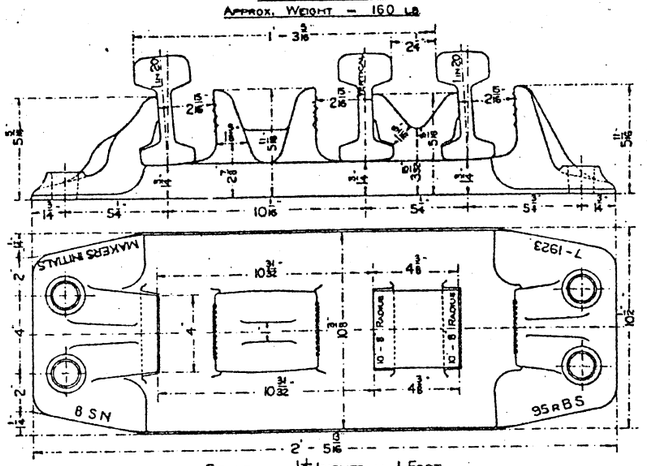

Scale:— 1½ Inches = 1 Foot.

NOTES.

The Rail Jaws of all Slip Chairs other than the P. D.P.A and D.P.B Chairs conform to the profile of the Rail Jaw of the S.I Chair (See Drawing Nº 4.) subject, however, to the essential difference in the horizontal inclination necessitated by the angle of the Crossings.

The Details of Key Jaw are shewn on Drawing Nºs 18 & 38 and these Drawings are typical of the Key Jaws for all Slip Chairs, subject to the essential difference in the horizontal inclination, necessitated by the angle of the Crossings, and subject also to the height being 5¼" instead of 5½" in the case of Inner Jaw of the 8. S. C. Chair, and the Point Rail Key Jaw of the 8 S B. Chair.

Also the dimension from the centre of Rail Seat to edge of Chair is 6½" instead of 7⅛" in the case of the Outer Jaws of the 8. S C. and the 8. S. S. C. Chairs.

The horizontal dimensions appearing on the Elevation Drawings are those obtaining in the centre of the Chair, excepting in the case of the A Chair, which latter are taken not at the centre of the Chair but at the Point of the Crossing.

The dimensions shewn on the Drawings for the Right Hand Chairs apply also to the corresponding Left Hand Chairs, and vice versa.

Switch and Stock Rails to be canted towards the running side at an inclination of 1 in 20 from the vertical.

The Holes in the Chair Bases to take the Standard Ferrule and Screw.

The Letters (UN) and (ST) to be cast on the 8. D.P.A and 8. D.P.B Chairs to indicate from which type of Switch, Undercut or Straightcut, it has been designed.

The date of manufacture, makers initials, and weight of Rail designed for, are also to be cast on each Chair.

For detail of Chair Screws for 8 SA built-up Chairs, see Drawing Nº 43

STANDARD RAILWAY EQUIPMENT PERMANENT WAY.

CHAIRS FOR 1 IN 7 OBTUSE ANGLE CROSSING WITH SINGLE & DOUBLE SLIP ROADS.

DIMENSIONS OF 7DPA AND 7DPB CHAIRS.

CHAIR	SWITCH	a	b	c	d	e	APPROX WT
7DPA	UNDERCUT	11 5/64	1' 2 1/32	1' 2 7/64	1' 3 3/32	2' 5 3/32	118 LB
	STRAIGHTCUT	11 5/64	1' 3/16	1' 3/16	1' 3 3/32	2' 6 7/16	120 LB
7DPB	UNDERCUT	1' 3 5/64	1' 6 1/32	1' 6 7/32	1' 7 3/32	2' 8 3/32	129 LB
	STRAIGHTCUT	1' 3 5/64	1' 6 1/16	1' 7"	1' 7 3/32	2' 9 3/16	131 LB

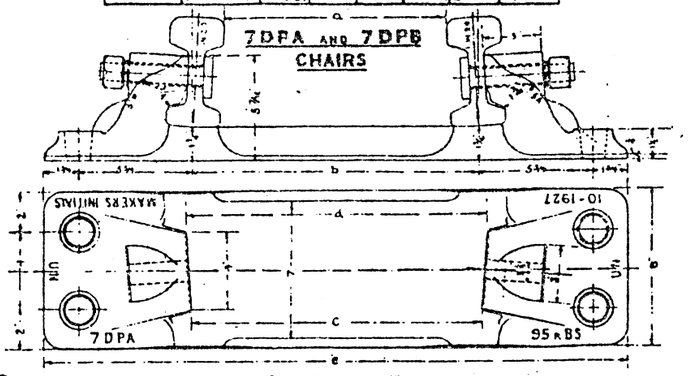

95R.B.S. RAIL.

7 S2PR CHAIR.

APPROX. WEIGHT · 83 LB

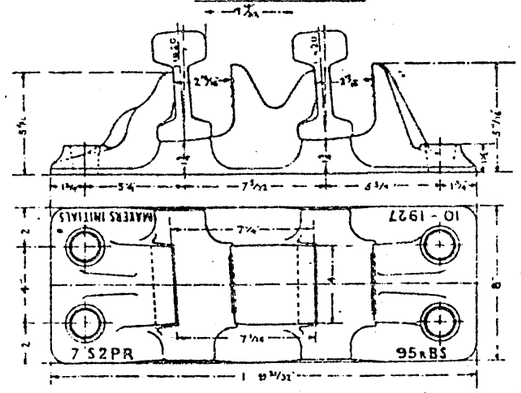

7 LISR CHAIR.

APPROX WEIGHT 93 LB

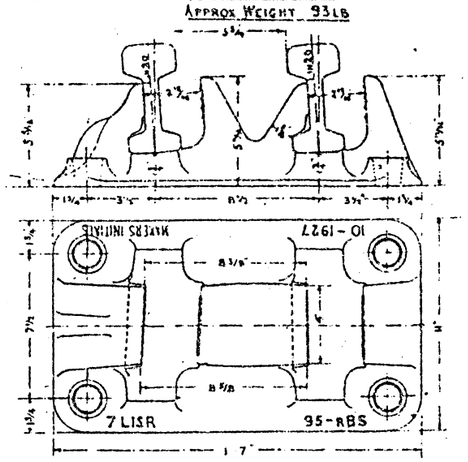

7 SAR CHAIR (BUILT UP)

APPROX WEIGHT · 295 LB

FOR DETAILS OF C.I. BRACKETS SEE DRAWING Nº 38.

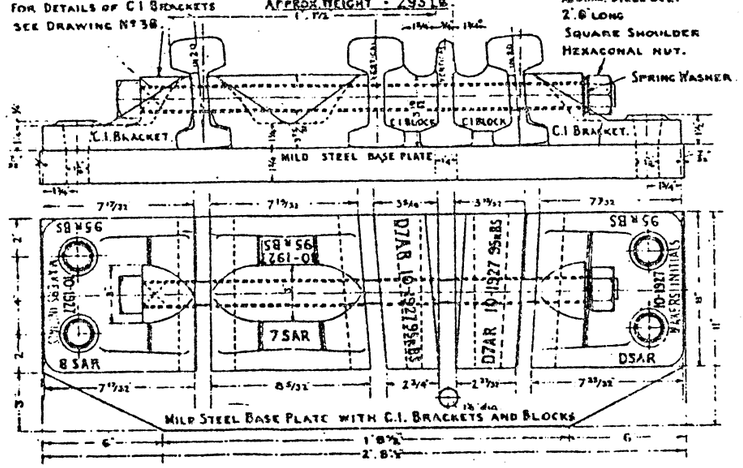

APPROX WEIGHT · 158 LB. 7 SAR CHAIR (CAST IRON.)

NOTE: WHEN THIS CHAIR IS USED, THE 3" EXTENSION OF POINT RAIL FOR HOLDING DOWN BOLT IS NOT REQUIRED.

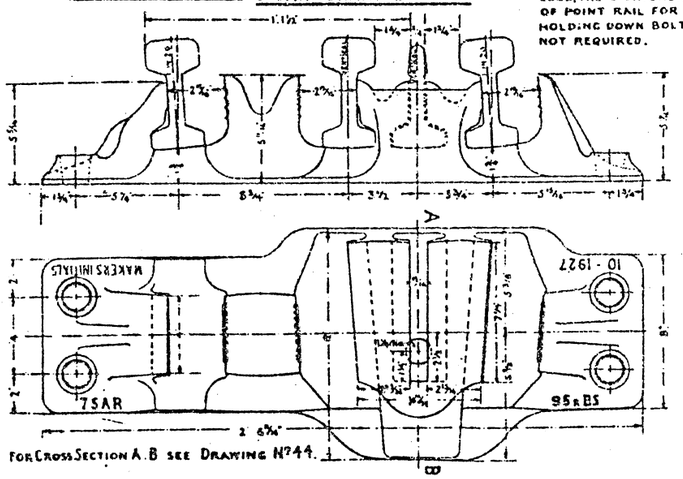

FOR CROSS SECTION A.B SEE DRAWING Nº 44.

SP CHAIR.

APPROX WEIGHT · 61 LB.

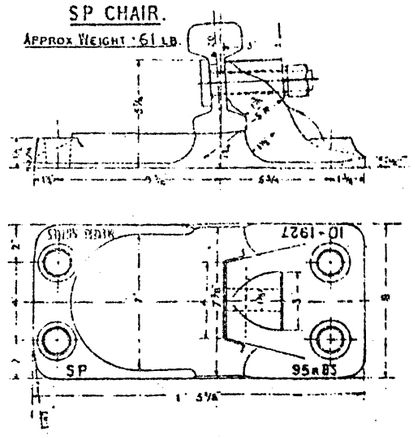

7 SBR CHAIR

APPROX. WEIGHT · 178 LB

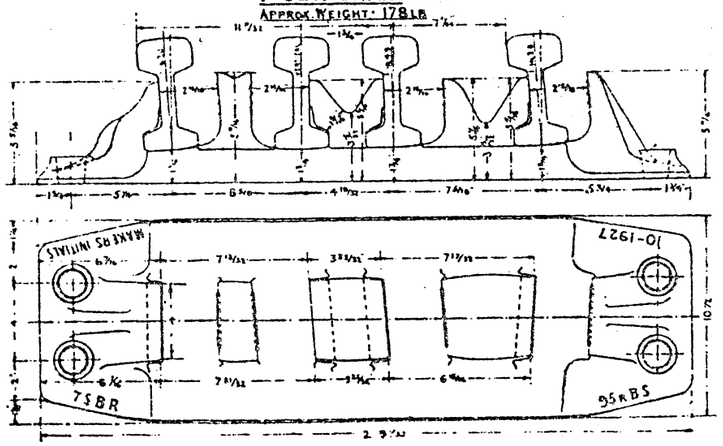

7 SN CHAIR.

APPROX. WEIGHT · 160 LB

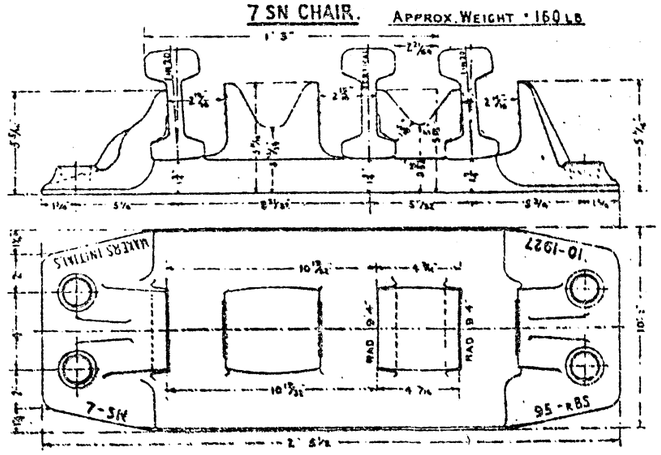

SCALE:- 1½ INCHES · 1 FOOT

NOTES.

THE RAIL JAWS OF ALL SLIP CHAIRS OTHER THAN THE 7DPA AND 7DPB CHAIRS CONFORM TO THE PROFILE OF THE RAIL JAW OF THE S1 CHAIR (SEE DRAWING Nº 4), SUBJECT HOWEVER TO THE ESSENTIAL DIFFERENCE IN THE HORIZONTAL INCLINATION NECESSITATED BY THE ANGLE OF THE CROSSINGS.

THE DETAILS OF KEY JAW ARE SHOWN ON DRAWINGS Nºˢ 18 & 38 AND THESE DRAWINGS ARE TYPICAL OF THE KEY JAWS FOR ALL SLIP CHAIRS, SUBJECT TO THE ESSENTIAL DIFFERENCE IN THE HORIZONTAL INCLINATION NECESSITATED BY THE ANGLE OF THE CROSSINGS, AND SUBJECT ALSO TO THE HEIGHT BEING 5¾" INSTEAD OF 5⅝ IN THE CASE OF THE POINT RAIL KEY JAW OF THE 7SB CHAIR.

THE HORIZONTAL DIMENSIONS APPEARING ON THE ELEVATION DRAWINGS ARE THOSE OBTAINING IN THE CENTRE OF THE CHAIR, EXCEPTING IN THE CASE OF THE A CHAIR, WHICH LATTER ARE TAKEN NOT AT THE CENTRE OF THE CHAIR, BUT AT THE POINT OF THE CROSSING.

THE DIMENSIONS SHOWN ON THE DRAWINGS FOR THE RIGHT HAND CHAIRS, APPLY ALSO TO THE CORRESPONDING LEFT HAND CHAIRS, AND VICE VERSA.

SWITCH AND STOCK RAILS TO BE CANTED TOWARDS THE RUNNING SIDE AT AN INCLINATION OF 1 IN 20 FROM THE VERTICAL.

THE HOLES IN THE CHAIR BASES TO TAKE THE STANDARD FERRULE AND SCREW.

THE LETTERS (UK) AND (ST) TO BE CAST ON THE 7DPA AND 7DPB CHAIRS TO INDICATE FOR WHICH TYPE OF SWITCH UNDERCUT OR STRAIGHTCUT, IT HAS BEEN DESIGNED.

THE DATE OF MANUFACTURE, MAKERS INITIALS, AND WEIGHT OF RAIL DESIGNED FOR, ARE ALSO TO BE CAST ON EACH CHAIR.

FOR DETAIL OF CHAIR SCREWS FOR 7SA BUILT UP CHAIRS, SEE DRAWING Nº 43

STANDARD RAILWAY EQUIPMENT — PERMANENT WAY.

N° 46P

CHAIRS FOR 1 IN 7½ OBTUSE ANGLE CROSSING WITH SINGLE & DOUBLE SLIP ROADS.

95 R. B. S. RAIL.

DIMENSIONS OF 7½ D.P.A. CHAIR.

SWITCH	a	b	c	d	e	APPROX WT
UNDERCUT	1'-0 9/16"	1'-4 29/32"	1'-4 11/32"	1'-4 6"	2'-7 29/32"	124 LB.
STRAIGHTCUT	1'-1 3/16"	1'-4 29/32"	1'-5 1/16"	1'-5 3/32"	2'-7 29/32"	126 LB.

7½ D.P.A. CHAIR.

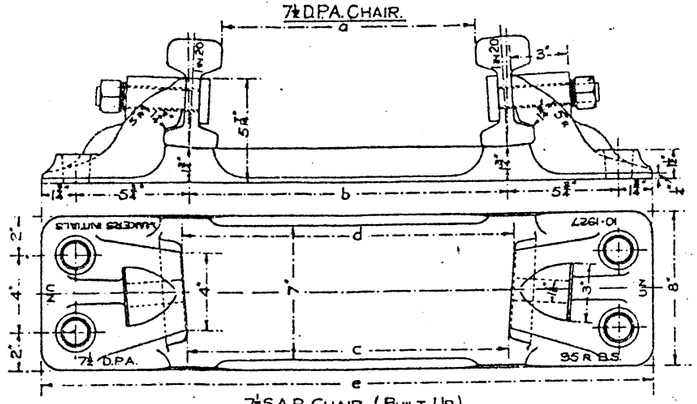

7½ S.A.R. CHAIR. (BUILT UP)
APPROX WEIGHT = 295 LB.

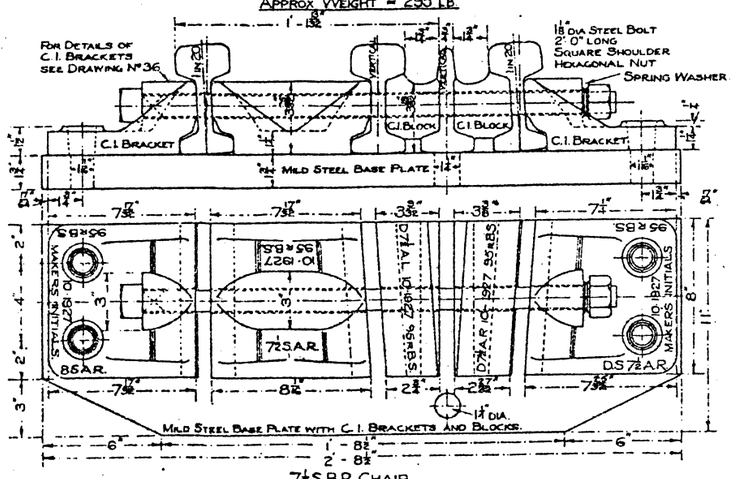

7½ S.B.R CHAIR.
APPROX WEIGHT = 179 LB.

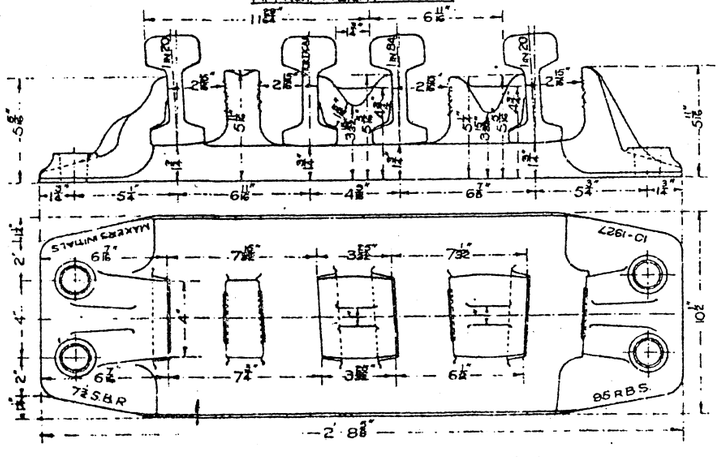

7½ S.1.P.R. CHAIR.
APPROX WEIGHT = 77 LB.

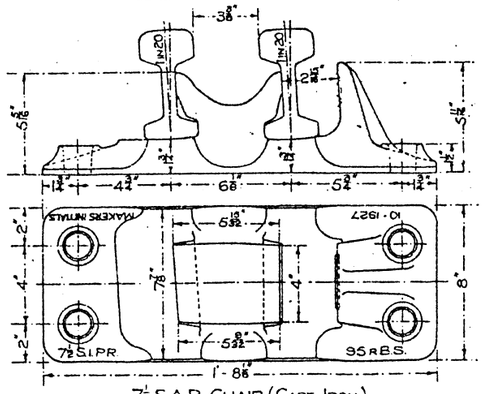

7½ S.A.R. CHAIR. (CAST IRON.)
APPROX WEIGHT = 158 LB.

NOTE WHEN THIS CHAIR IS USED, THE 3" EXTENSION OF POINT RAIL FOR HOLDING DOWN BOLT IS NOT REQUIRED.

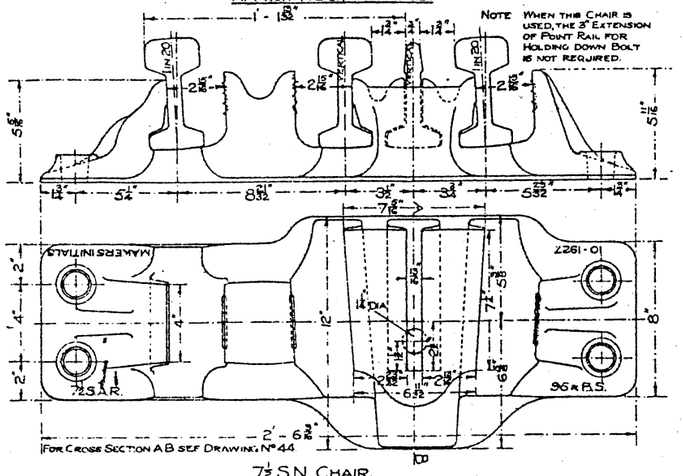

7½ S.N. CHAIR.
APPROX WEIGHT = 160 LB.

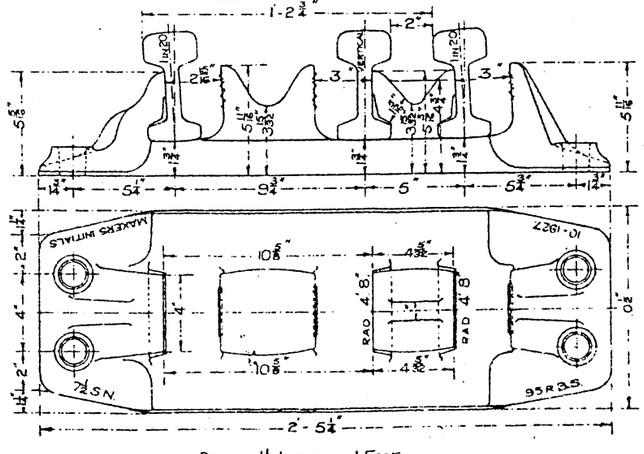

7½ S.2.P.R. CHAIR.
APPROX WEIGHT = 86 LB.

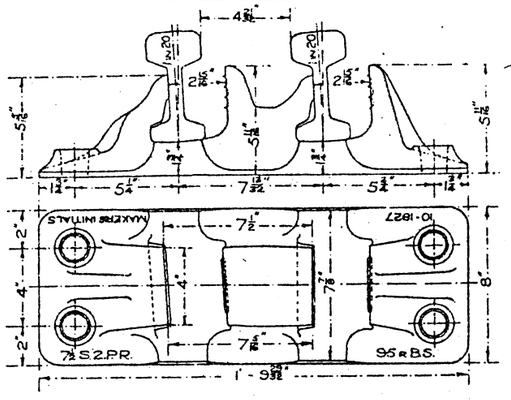

7½ L.I.S.L. CHAIR.
APPROX WEIGHT = 94 LB.

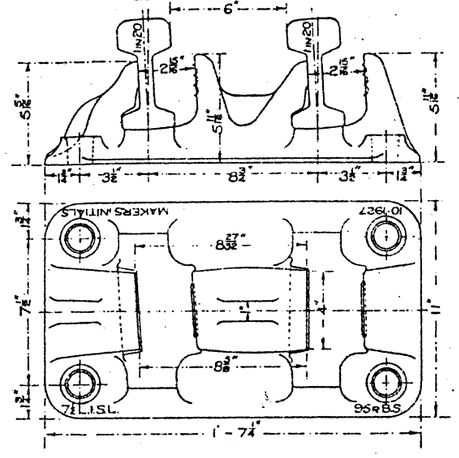

SCALE: 1½ INCHES = 1 FOOT.

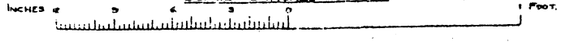

NOTES.

THE RAIL JAW OF ALL SLIP CHAIRS OTHER THAN THE "P" AND "D.P.A" TO CONFORM TO THE PROFILE OF THE RAIL JAW OF THE S.1 CHAIR (SEE DRAWING N° 4) SUBJECT HOWEVER TO THE ESSENTIAL DIFFERENCE IN THE HORIZONTAL INCLINATION NECESSITATED BY THE ANGLE OF THE CROSSING.

THE DETAILS OF THE KEY JAW ARE SHEWN ON DRAWINGS N°s 18 AND 38 AND THESE DRAWINGS ARE TYPICAL OF THE KEY JAWS FOR ALL SLIP CHAIRS, SUBJECT TO THE ESSENTIAL DIFFERENCE IN THE HORIZONTAL INCLINATION NECESSITATED BY THE ANGLE OF THE CROSSING, AND SUBJECT ALSO TO THE HEIGHT BEING 5¼" INSTEAD OF 5 11/16" IN THE CASE OF THE POINT RAIL KEY JAW OF THE 7½ S.B CHAIR.

THE HORIZONTAL DIMENSIONS APPEARING ON THE ELEVATION DRAWINGS ARE THOSE OBTAINING IN THE CENTRE OF THE CHAIR, EXCEPTING IN THE CASE OF THE "A" CHAIR, WHICH LATTER ARE TAKEN NOT AT THE CENTRE OF THE CHAIR, BUT AT THE POINT OF THE CROSSING.

THE DIMENSIONS SHEWN ON THE DRAWINGS FOR THE RIGHT HAND CHAIRS APPLY ALSO TO THE CORRESPONDING LEFT HAND CHAIRS.

SWITCH AND STOCK RAILS ARE TO BE CANTED TOWARDS THE RUNNING SIDE A" AN INCLINATION OF 1 IN 20 FROM THE VERTICAL.

THE HOLES IN THE CHAIR BASES TO TAKE THE STANDARD FERRULE AND SCREW.

THE LETTERS (UN) AND (ST) TO BE CAST ON THE 7½ D.P.A. CHAIR TO INDICATE FOR WHICH TYPE OF SWITCH, UNDERCUT OR STRAIGHTCUT, IT HAS BEEN DESIGNED.

THE DATE OF MANUFACTURE, MAKERS INITIALS, AND WEIGHT OF RAIL DESIGNED FOR, ARE ALSO TO BE CAST ON EACH CHAIR.

FOR DETAIL OF CHAIR SCREWS FOR 7½ S.A. BUILT UP CHAIR, SEE DRAWING N° 43.

RIDER TO DRAWING Nº 46E
15TH FEB. 1943.

DOPA & DOPB CHAIRS FOR 1-7-7½ & 8
OBTUSE ANGLE CROSSING WITH SLIP ROAD.

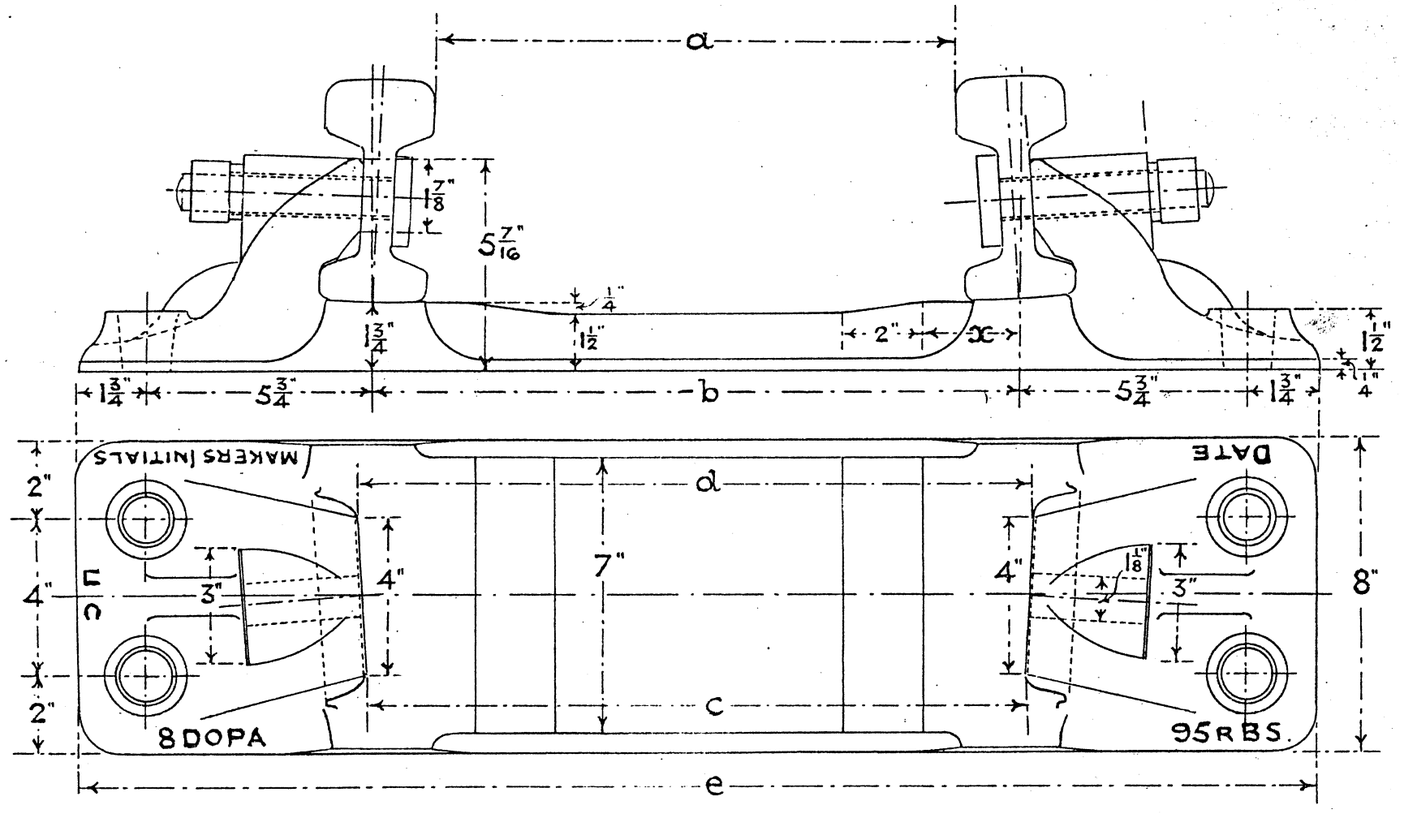

CHAIR	a	b	c	d	e	x	APPROX WT
7DOPA	11 9/64"	1'-2 13/32"	1'-2 17/32"	1-3 3/32"	2'-5 13/32"	2½"	
7DOPB	1-3 9/64"	1'-6 13/32"	1-6 17/32"	1-7 3/32"	2'-9 13/32"	3"	
7½ DOPA	1-0 15/16"	1-4 7/32"	1-4 11/32"	1-4 7/8"	2-7 7/32"	2½"	
8 DOPA	1-1 1/8"	1-4 3/8"	1-4 17/32"	1-5 1/32"	2-7 3/8"	2½"	
8DOPB	1-4 9/16"	1'-7 13/16"	1-7 21/32"	1-8 15/32"	2'-10 13/16"	3"	

Scale 3 Inches to One Foot.

CHAIRS FOR 1 IN 10 SCISSORS CROSSOVER

95 R. B.S. RAIL

S.C. 10 C.L.

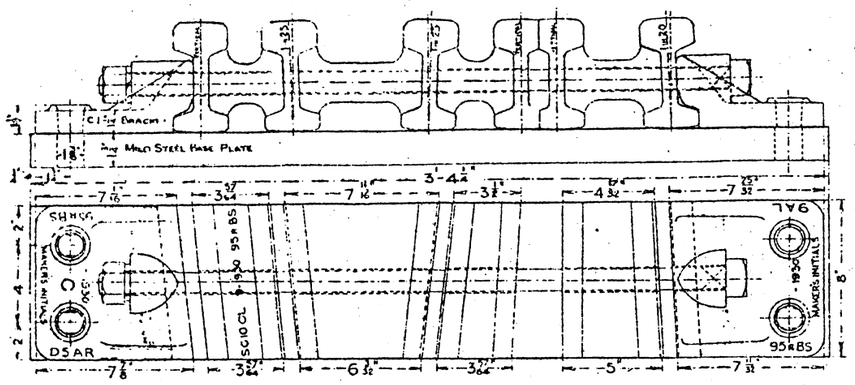

S.C. 10 C.R.

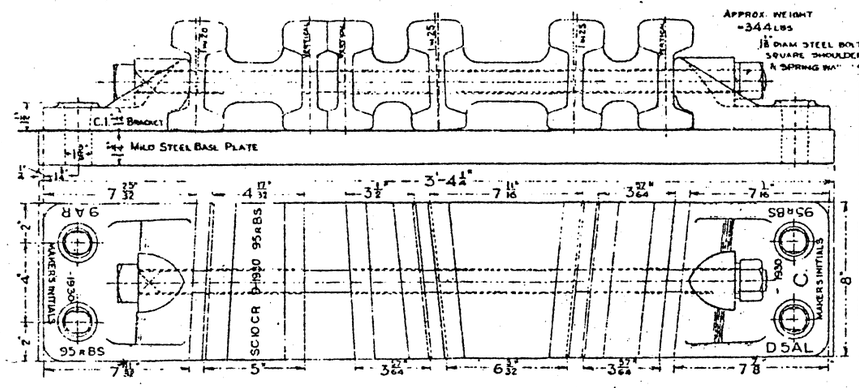

Notes

The Details of the C.I. Brackets for the built up chairs are shewn on Drawing No. 36 and this Drawing is typical of the Brackets for all crossings, subject to the essential difference in the horizontal dimensions necessitated by the angle of the crossing.

The horizontal dimensions appearing in the plan of the C.I. Blocks of each chair are those obtaining on the centre line X Y shewn in the detail of the Blocks.

All Bolts and Nuts to conform to the British Standard Specification No. 64, and to be fitted with Spring Washers.

Marking of C.I. Blocks.

Each block of the respective chairs to be marked as indicated on the Drawing by casting on the top of the blocks the letters and figures e.g. four blocks of the S.C. 10 CL chair each to be marked SC10 CL with month, year and rail section.

S.C. 10 B.L.

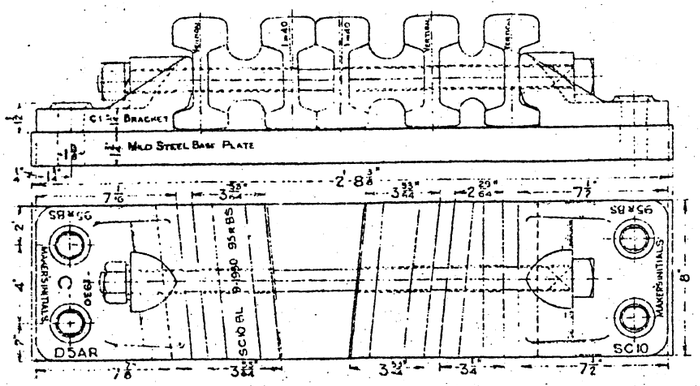

S.C. 10 B.R.

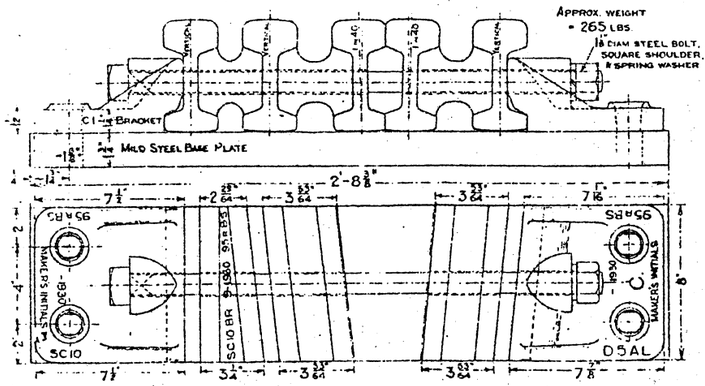

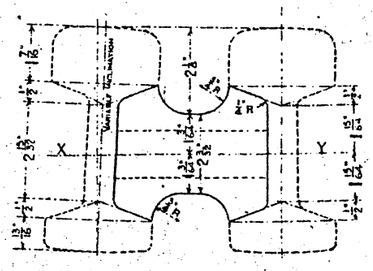

Typical End View and Plan of Cast Iron Blocks
Scale, Quarter Full Size

S.C. 10 A.L.

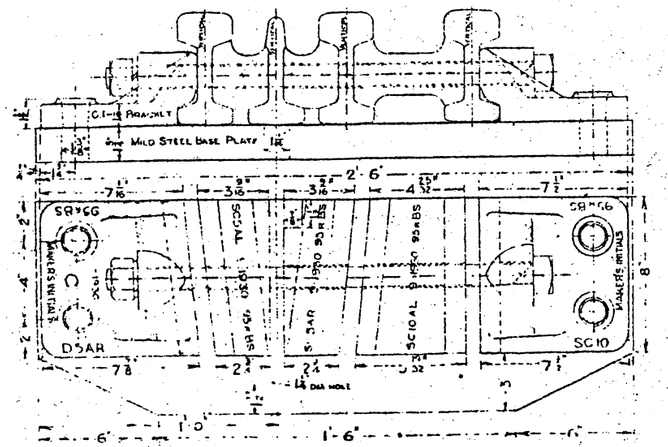

S.C. 10 A.R.

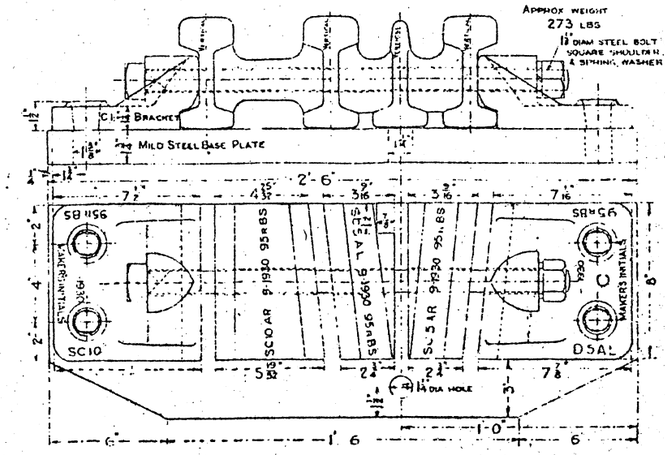

Detail of holes in base plate for chair screws

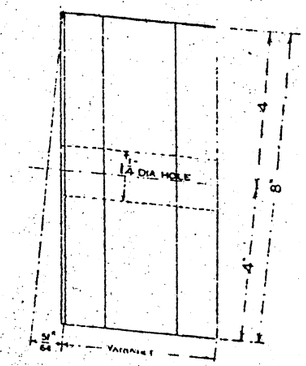

Scale: 1½ inches = 1 foot

STANDARD RAILWAY EQUIPMENT — PERMANENT WAY.

M.I. CHAIR. 43 LB.

95 R. B.S. RAIL.

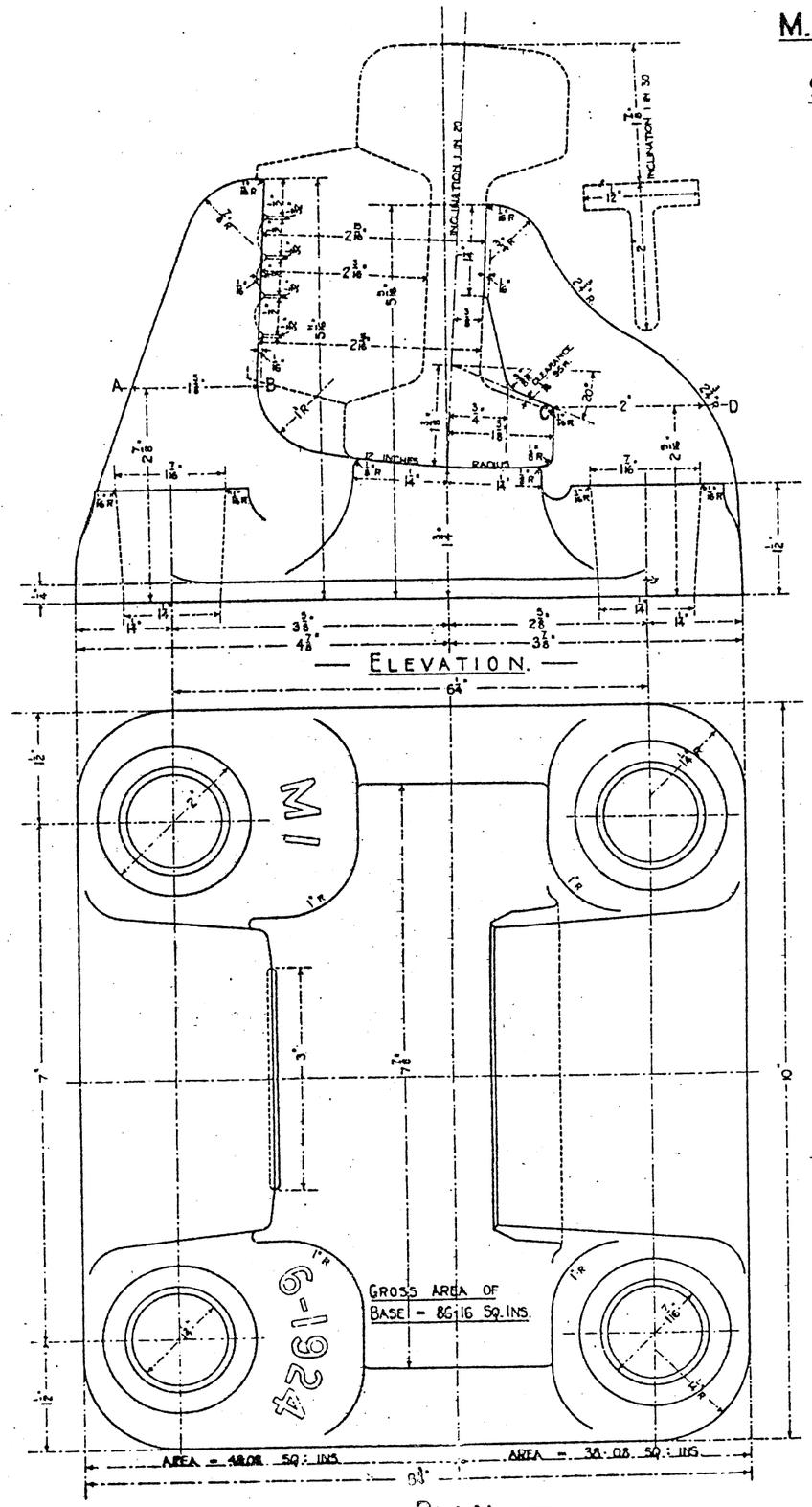

— ELEVATION. —

— PLAN. —

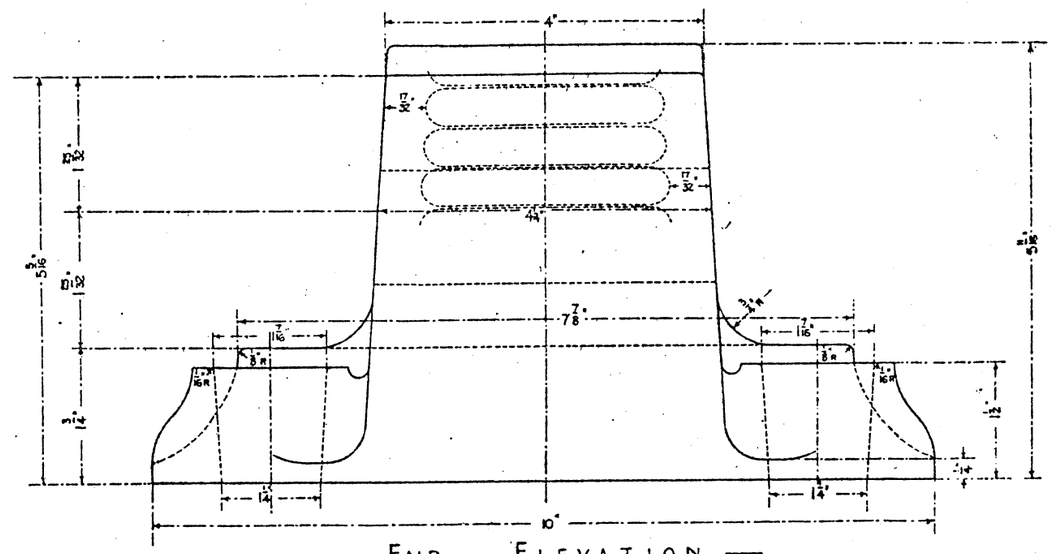

— END ELEVATION. —

THE 90 R. & 85 R. B.S. RAILS CAN ALSO BE USED IN THIS CHAIR.

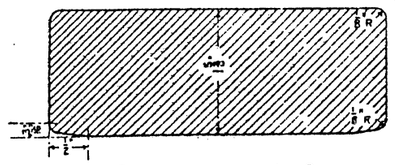

— SECTION A. B. —

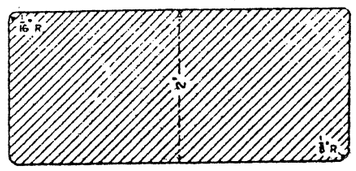

— SECTION C. D. —

— HALF FULL SIZE. —

STANDARD RAILWAY EQUIPMENT — PERMANENT WAY.

S.I.N & S.I.O CHAIRS

95 R. B. S. RAIL.

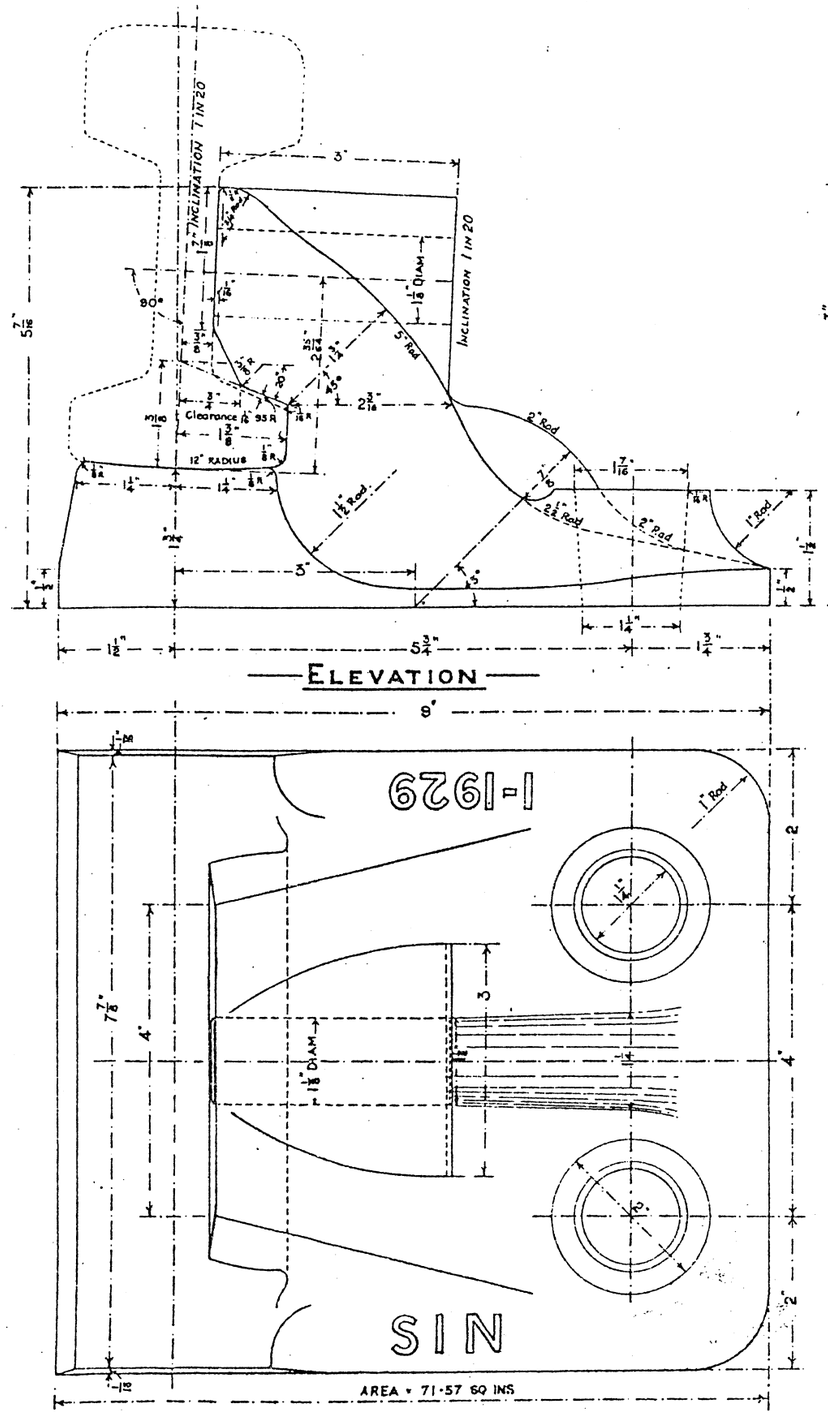

ELEVATION

PLAN

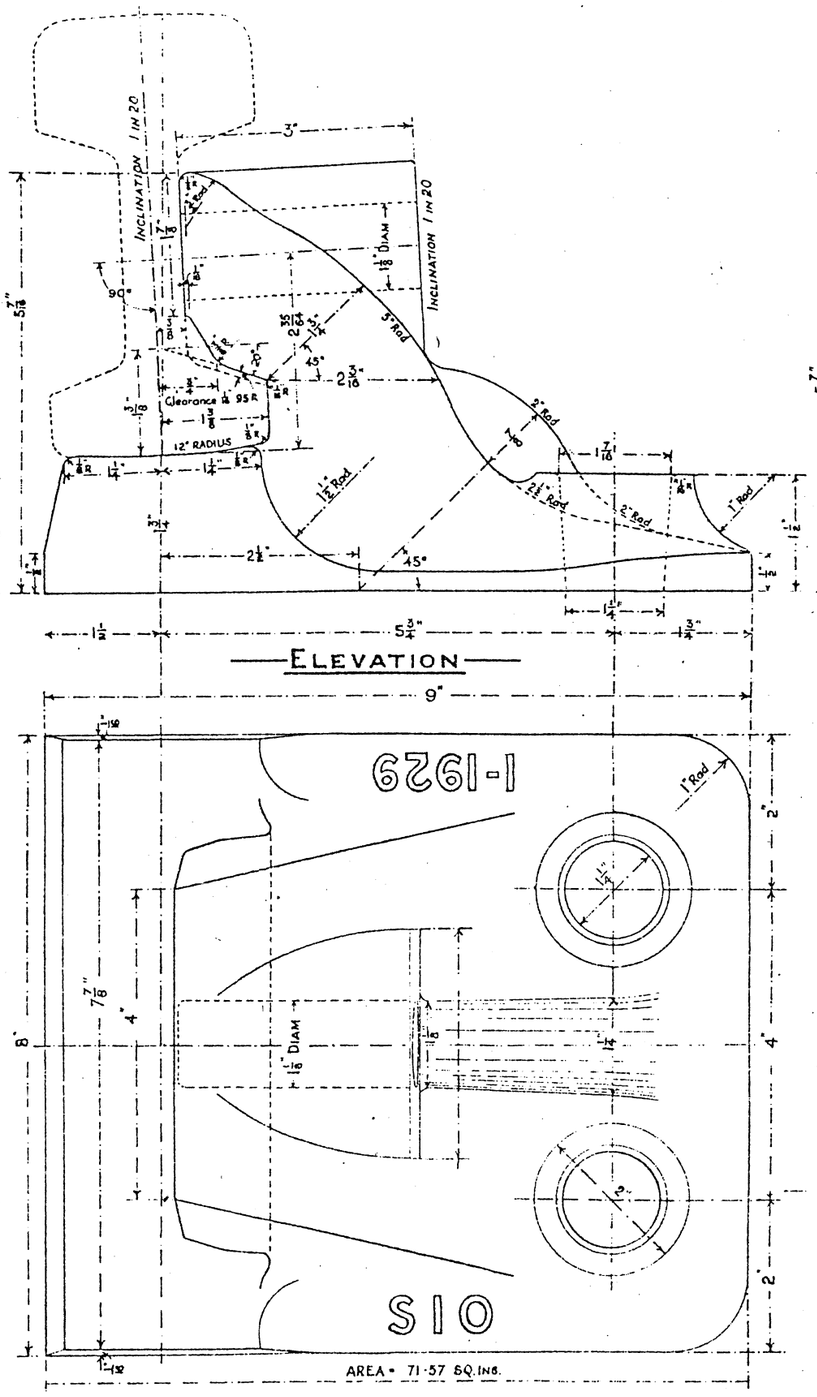

ELEVATION

PLAN

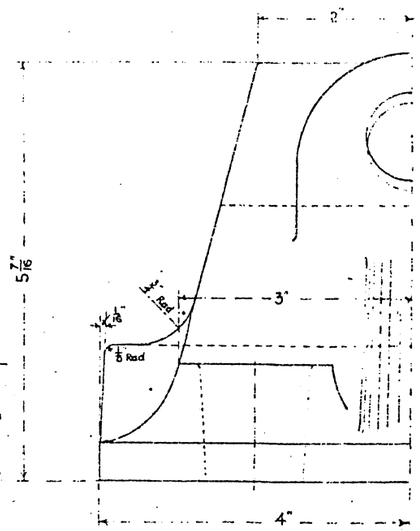

HALF END ELEVATION

APPROX. WEIGHT = 34 LB.

NOTE

The Stock Rail bolt shewn on Drawing Nº 19 to be used with this Chair.

HALF FULL SIZE

STANDARD RAILWAY EQUIPMENT — PERMANENT WAY.

S.1. S.1-J. & S.2. COMMON CHAIR CAUCES.

95 R. & 85 R. B.S. RAILS.

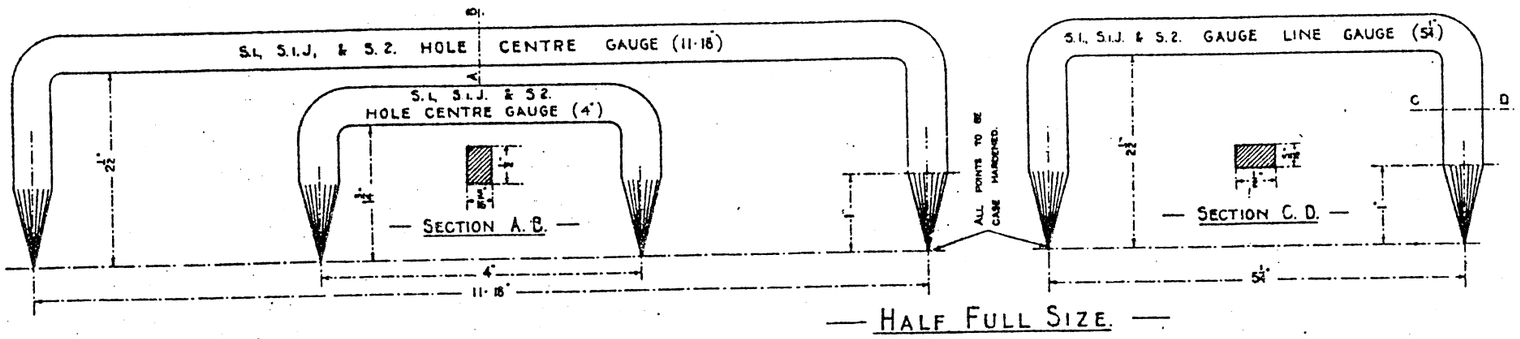

— HALF FULL SIZE. —

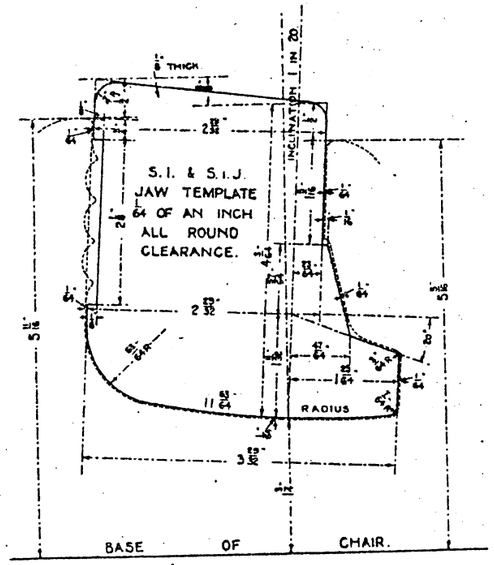

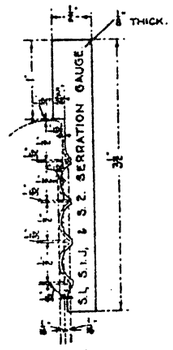

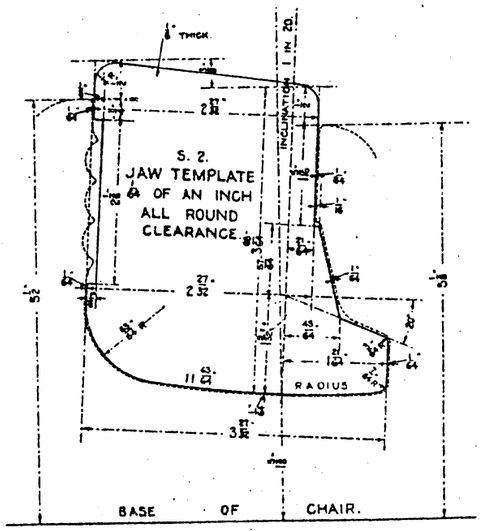

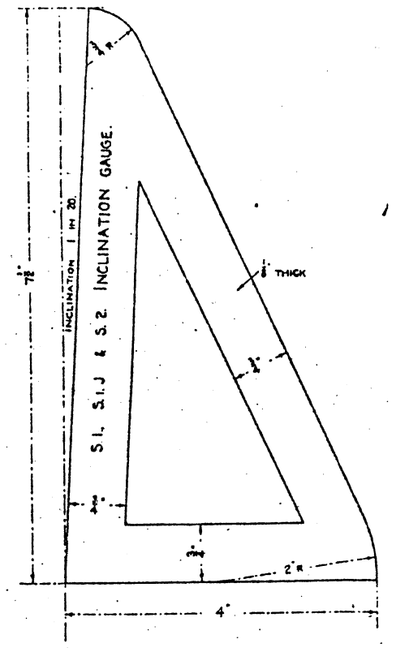

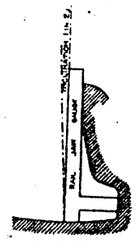

METHOD OF USING RAIL JAW GAUGE AFTER SCRIBING GAUGE LINE ON RAIL SEAT.

— EIGTH FULL SIZE. —

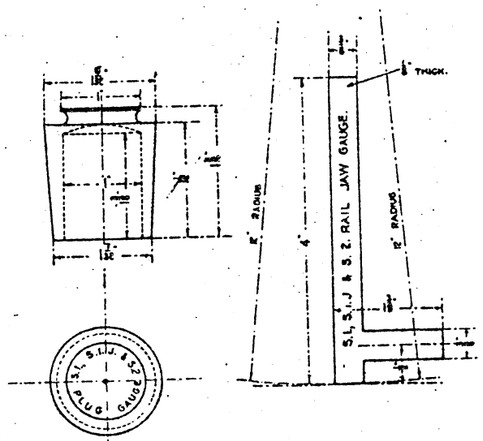

3 PLUGS REQUIRED.

METHOD OF GAUGING FASTENING HOLES.

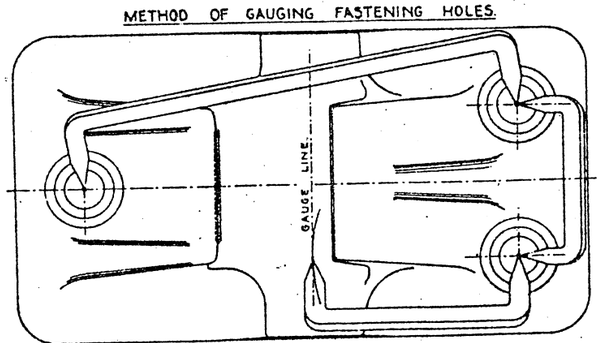

METHOD OF SCRIBING GAUGE LINE ON RAIL SEAT.

— QUARTER FULL SIZE. —

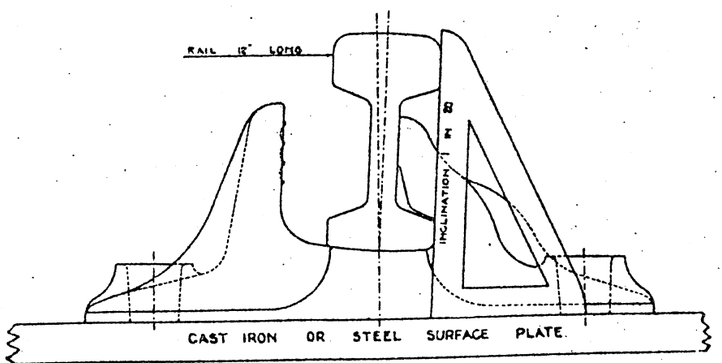

METHOD OF CHECKING INCLINATION OF RAIL JAW.

STANDARD RAILWAY EQUIPMENT — PERMANENT WAY.

SLEEPER SPACING & DETAILS OF FASTENINGS.

85 R. B.S. RAIL.

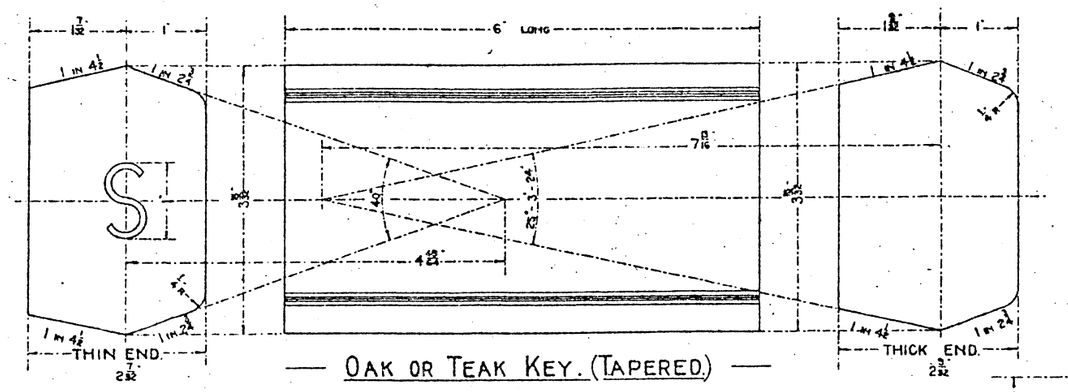

— OAK OR TEAK KEY. (TAPERED.) —

HALF FULL SIZE

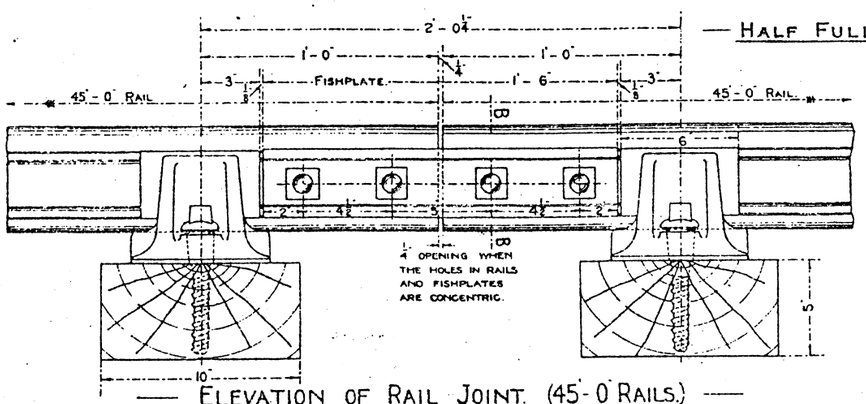

— ELEVATION OF RAIL JOINT. (45'-0" RAILS.) —

SCALE:- 1½ INCHES = 1 FOOT.

— FISHBOLT & NUT. —

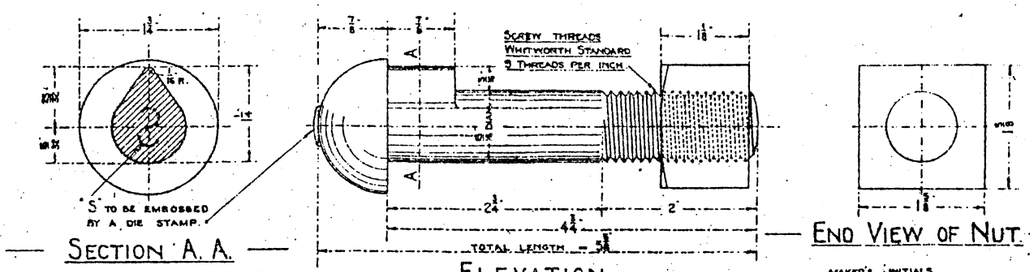

— SECTION A. A. —

— ELEVATION. —

— END VIEW OF NUT. —

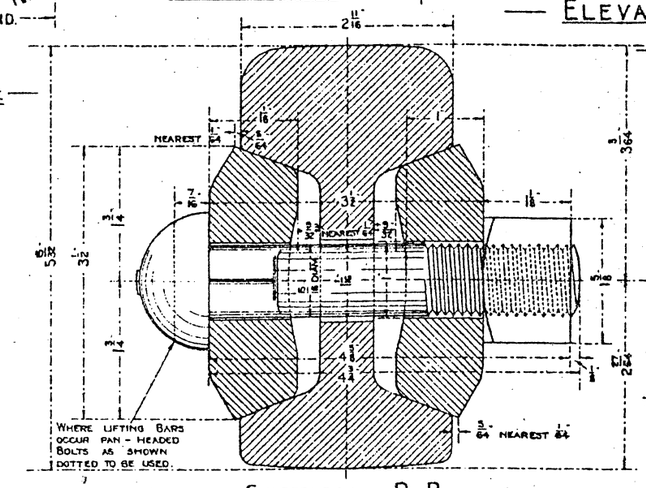

— SECTION B. B. —

— TEAK FERRULE. —

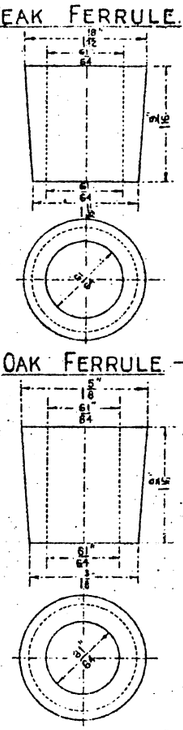

— OAK FERRULE. —

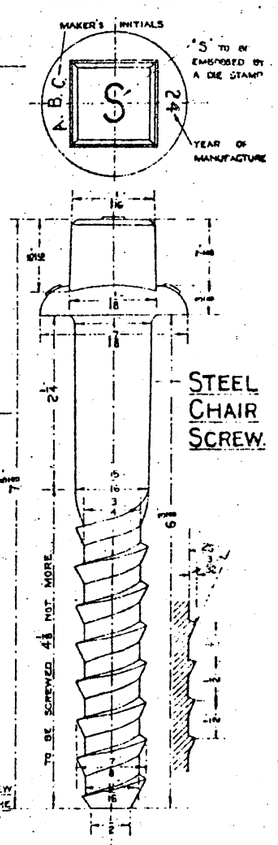

STEEL CHAIR SCREW.

NOTE - BEFORE INSERTING THE CHAIR SCREW THE FERRULE TO BE DRIVEN DOWN UNTIL THE TOP IS ¼" ABOVE THE CHAIR CASTING.

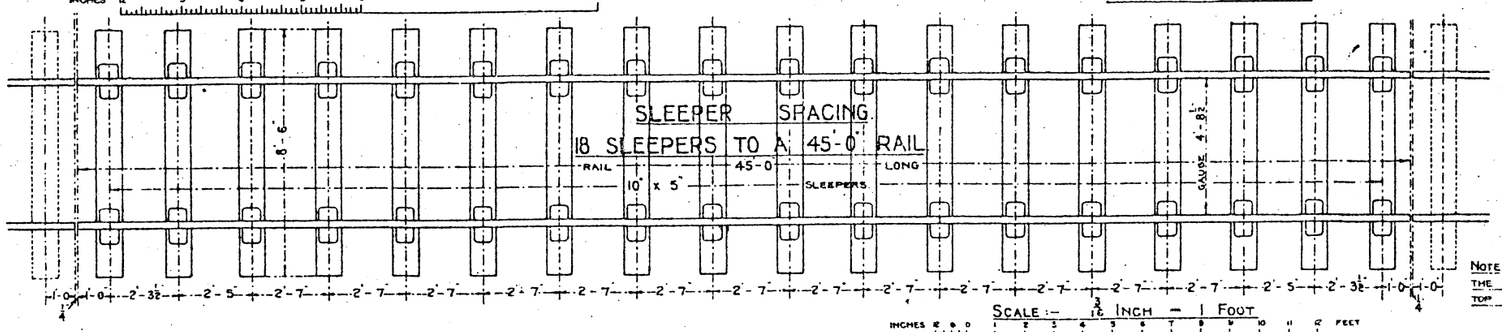

SCALE:- 3/16 INCH = 1 FOOT

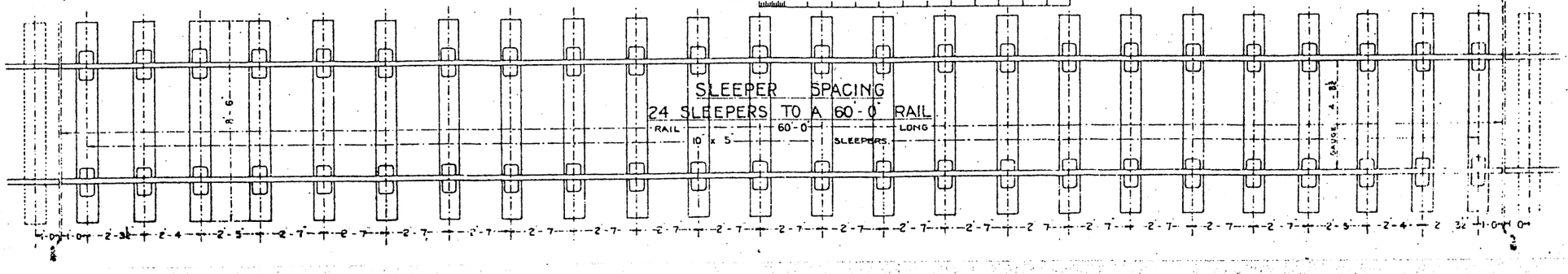

STANDARD RAILWAY EQUIPMENT — PERMANENT WAY.

Nº 50.

B. S. FISHPLATES & DETAILS OF RAIL DRILLING.

85 R. B.S. RAIL.

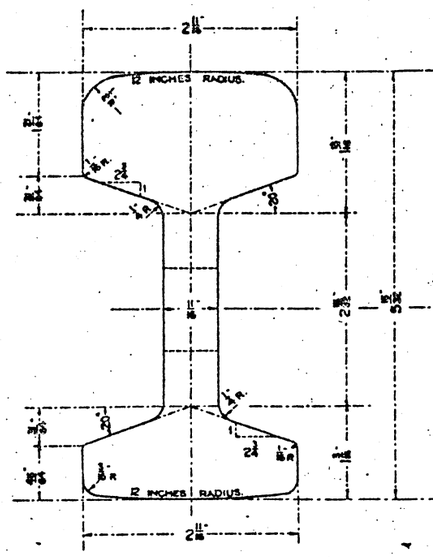

— SECTION OF RAIL. —

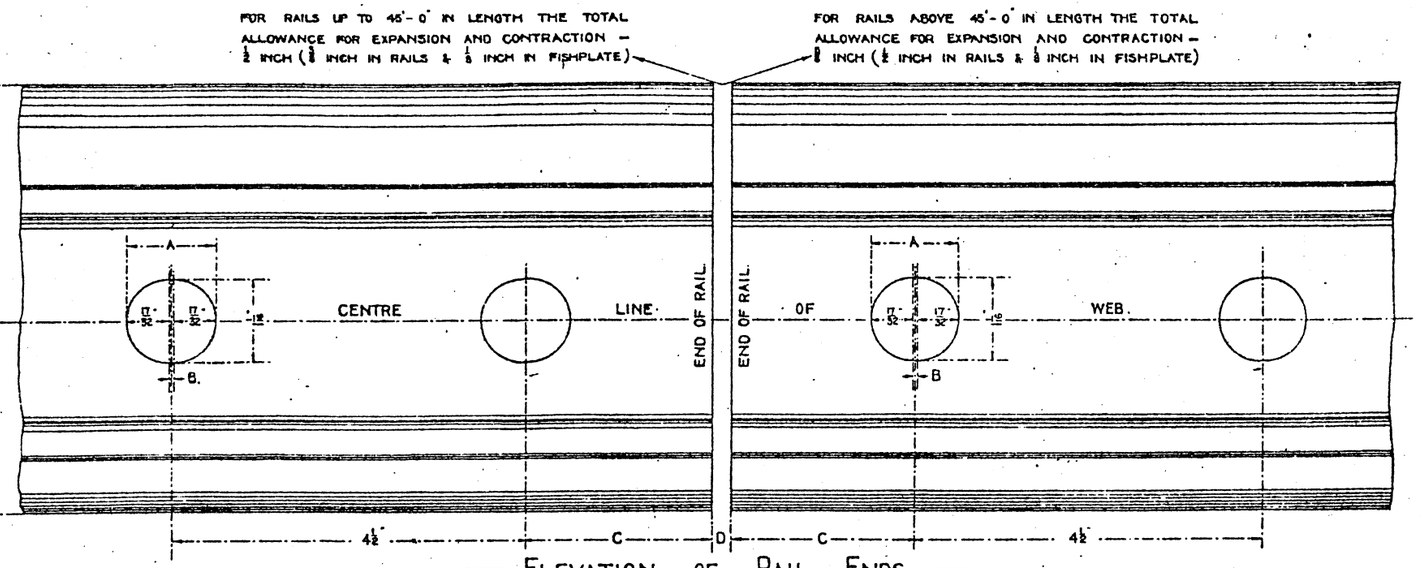

— ELEVATION OF RAIL ENDS. —

FOR RAILS UP TO 45'-0" IN LENGTH.		FOR RAILS ABOVE 45'-0" IN LENGTH.	
A	1 1/8"	A	1 3/16"
B	1/16"	B	1/8"
C	2 5/8"	C	2 11/32"
D	1/4"	D	3/8"

CLEARANCE BETWEEN RAILS (DIMENSION D) MEASURED WHEN THE HOLES IN RAILS AND FISHPLATES ARE CONCENTRIC.

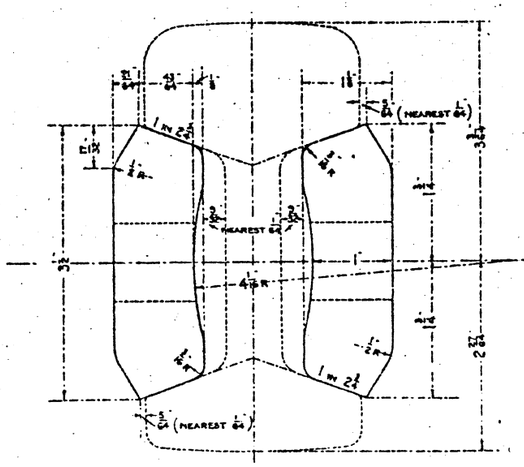

— SECTION OF FISHPLATE. —

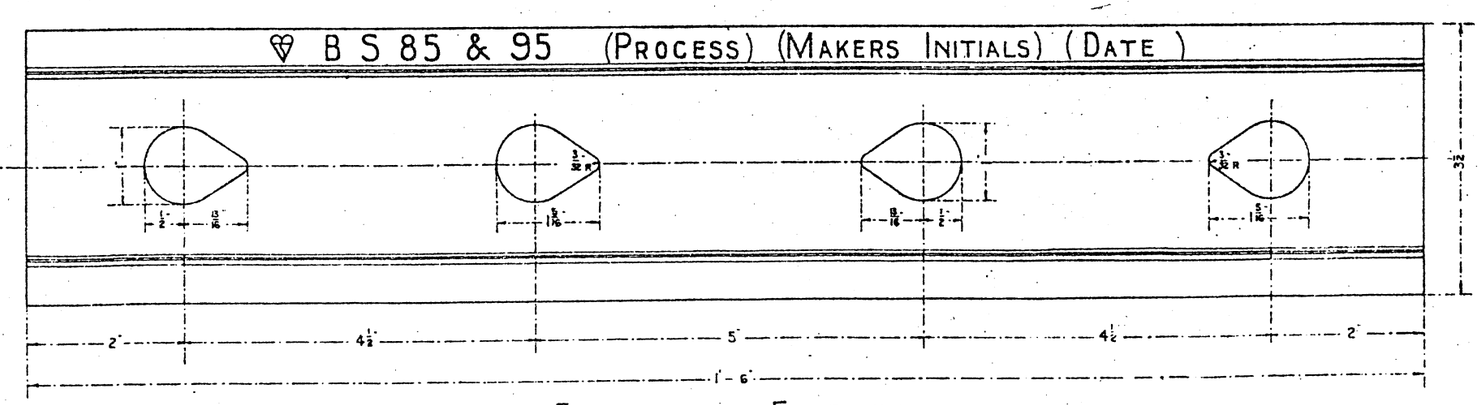

— ELEVATION OF FISHPLATE. —

WEIGHT — 32 1/4 LB. PER PAIR.

— HALF FULL SIZE. —

STANDARD RAILWAY EQUIPMENT — PERMANENT WAY.

Nº 51.

INSULATED FISHPLATES & DETAILS OF RAIL DRILLING.

85 R. B.S. RAIL.

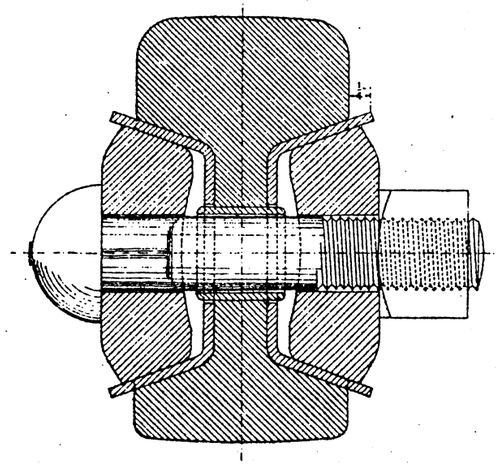

— SECTION A.B. —

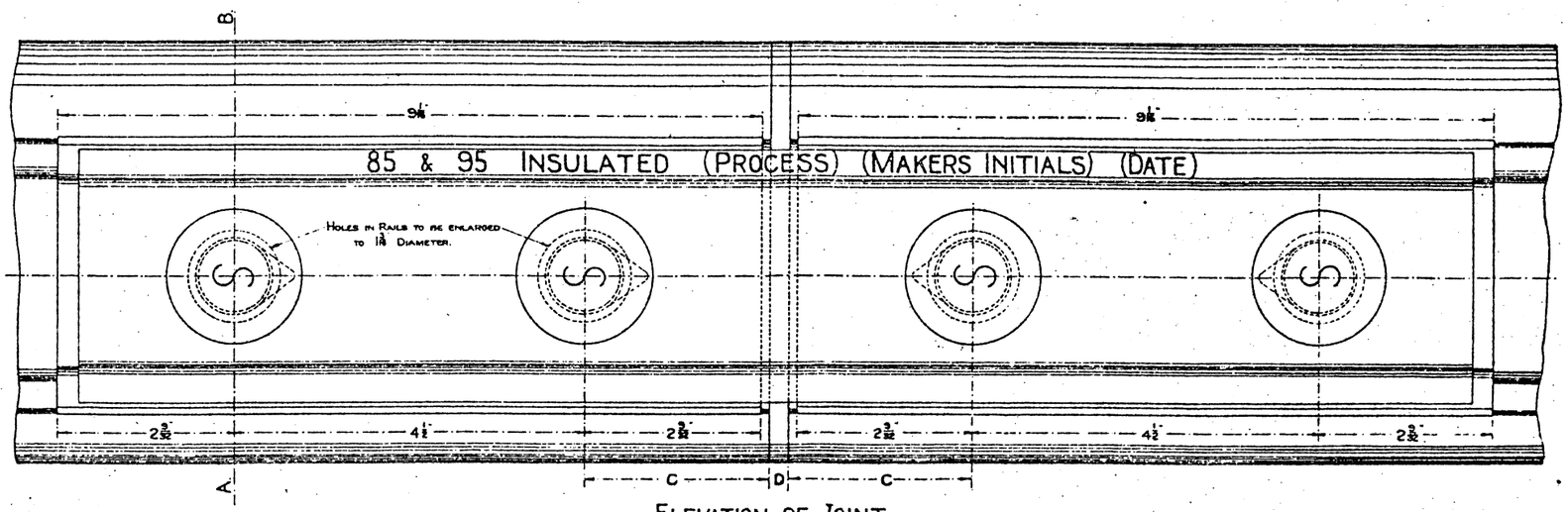

— ELEVATION OF JOINT. —

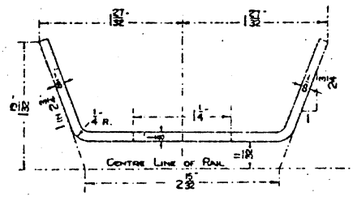

— SECTION OF SIDE PLATE. —

FOR RAILS UP TO 45'-0" IN LENGTH		FOR RAILS ABOVE 45'-0" IN LENGTH	
C.	$2\frac{3}{8}$	C.	$2\frac{11}{32}$
D.	$\frac{1}{4}$	D.	$\frac{5}{16}$

CLEARANCE BETWEEN RAILS (DIMENSION D) MEASURED WHEN THE HOLES IN RAILS & FISHPLATES ARE CONCENTRIC.

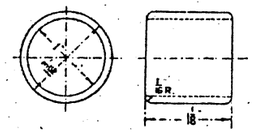

— INSULATING COLLET. —

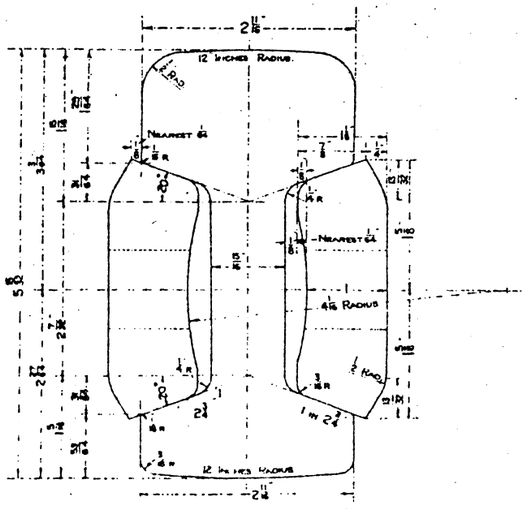

— SECTION OF FISHPLATE & INSULATING FILLING PIECE —

INSULATING FILLING PIECE FOR RAILS UP TO 45' 0" IN LENGTH TO BE ¼" THICK
OVER 45' 0" ⅜" THICK

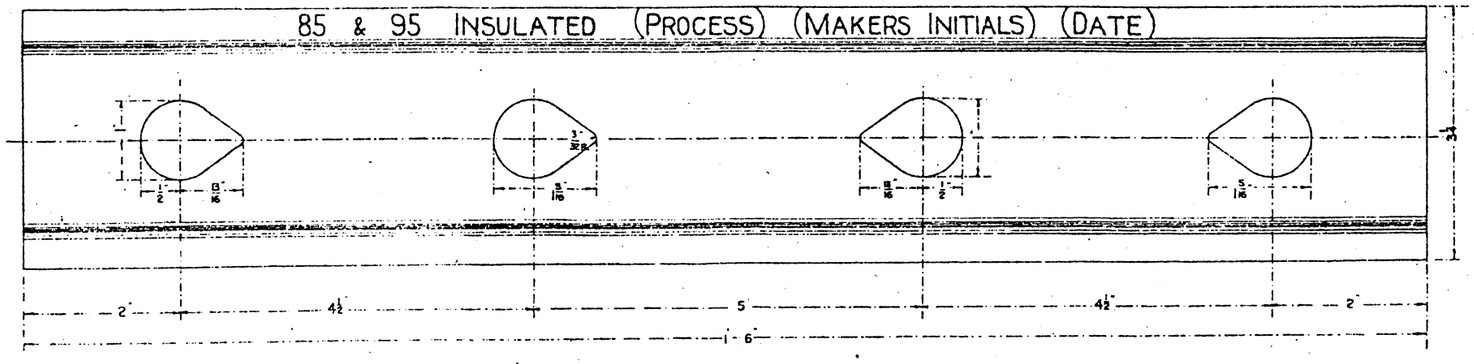

— ELEVATION OF FISHPLATE. —

— WEIGHT - 30¼ LB. PER PAIR. —

— HALF FULL SIZE —

STANDARD RAILWAY EQUIPMENT — PERMANENT WAY.

Nº 52.

COMMON CHAIR. S. 2. 40 LB

85 R. B.S. RAIL.

THE 90 R. B. S. RAIL CAN ALSO BE USED IN THIS CHAIR.

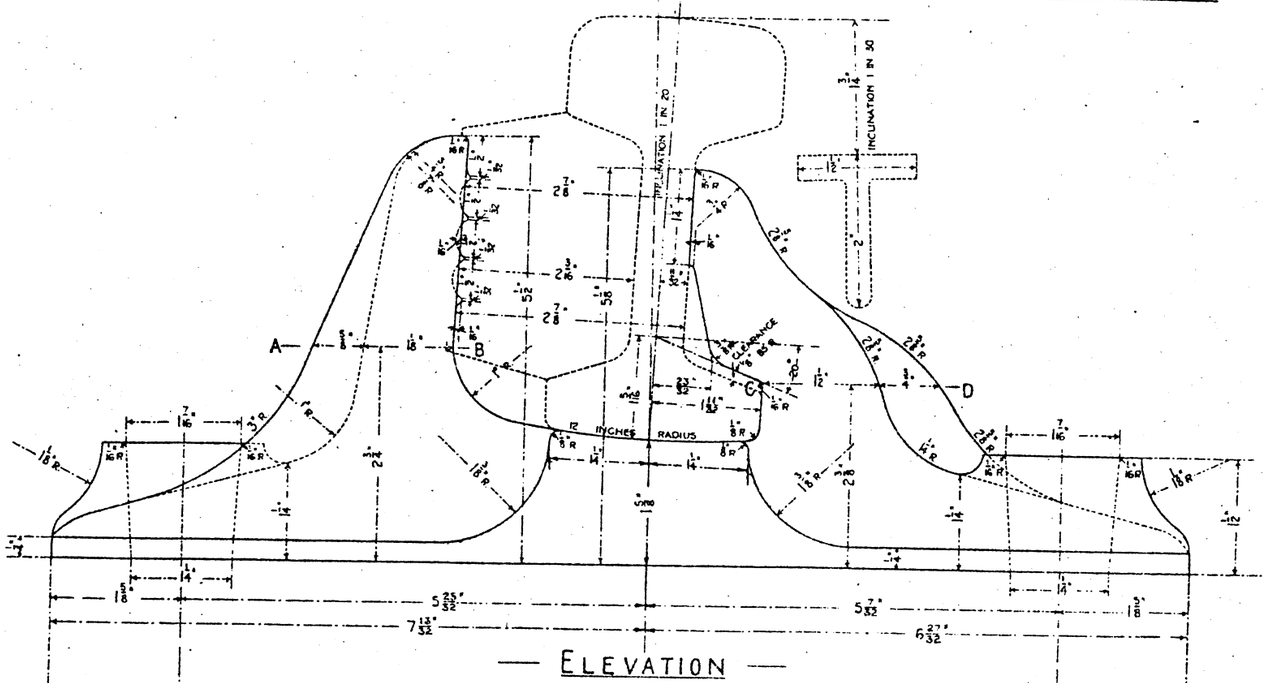

— ELEVATION —

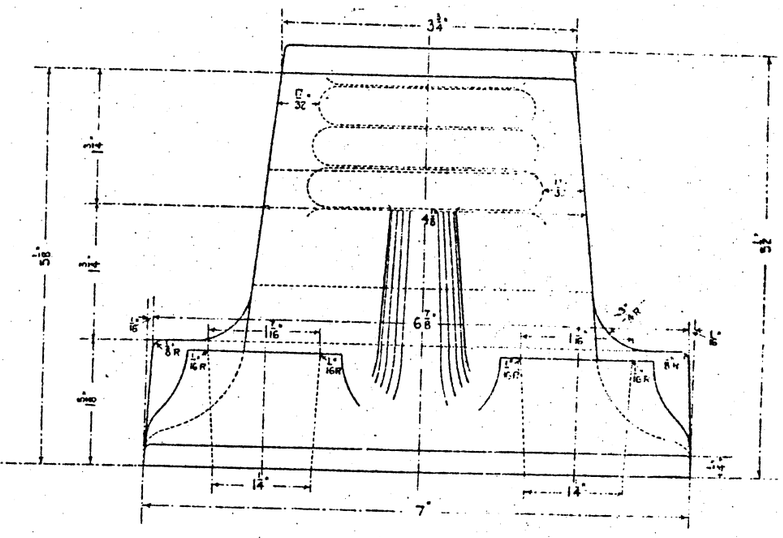

— END ELEVATION —

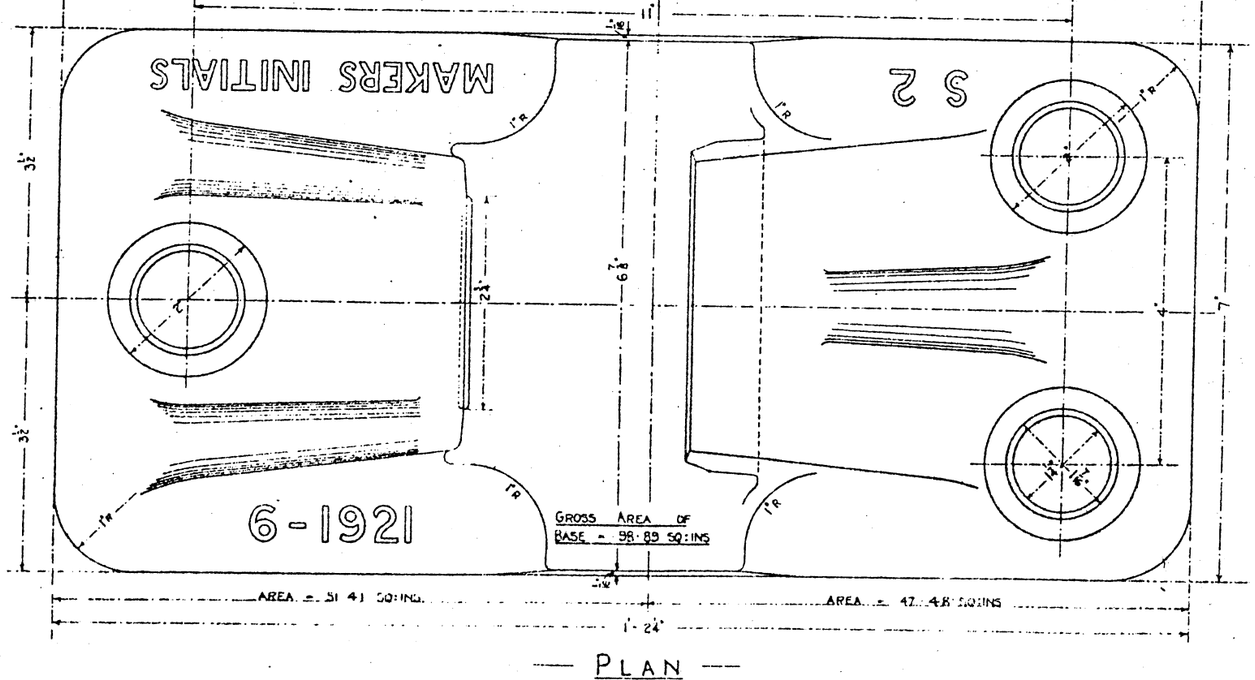

— PLAN —

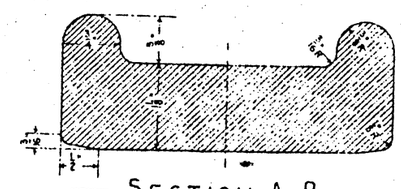

— SECTION A. B. —

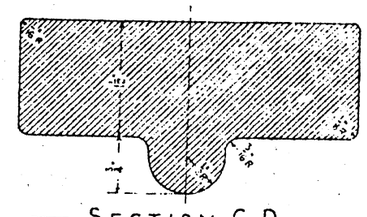

— SECTION C. D. —

— HALF FULL SIZE —

STANDARD RAILWAY EQUIPMENT — PERMANENT WAY.

L. 2. CHAIR. 42 LB.

85 R. B. S. RAIL.

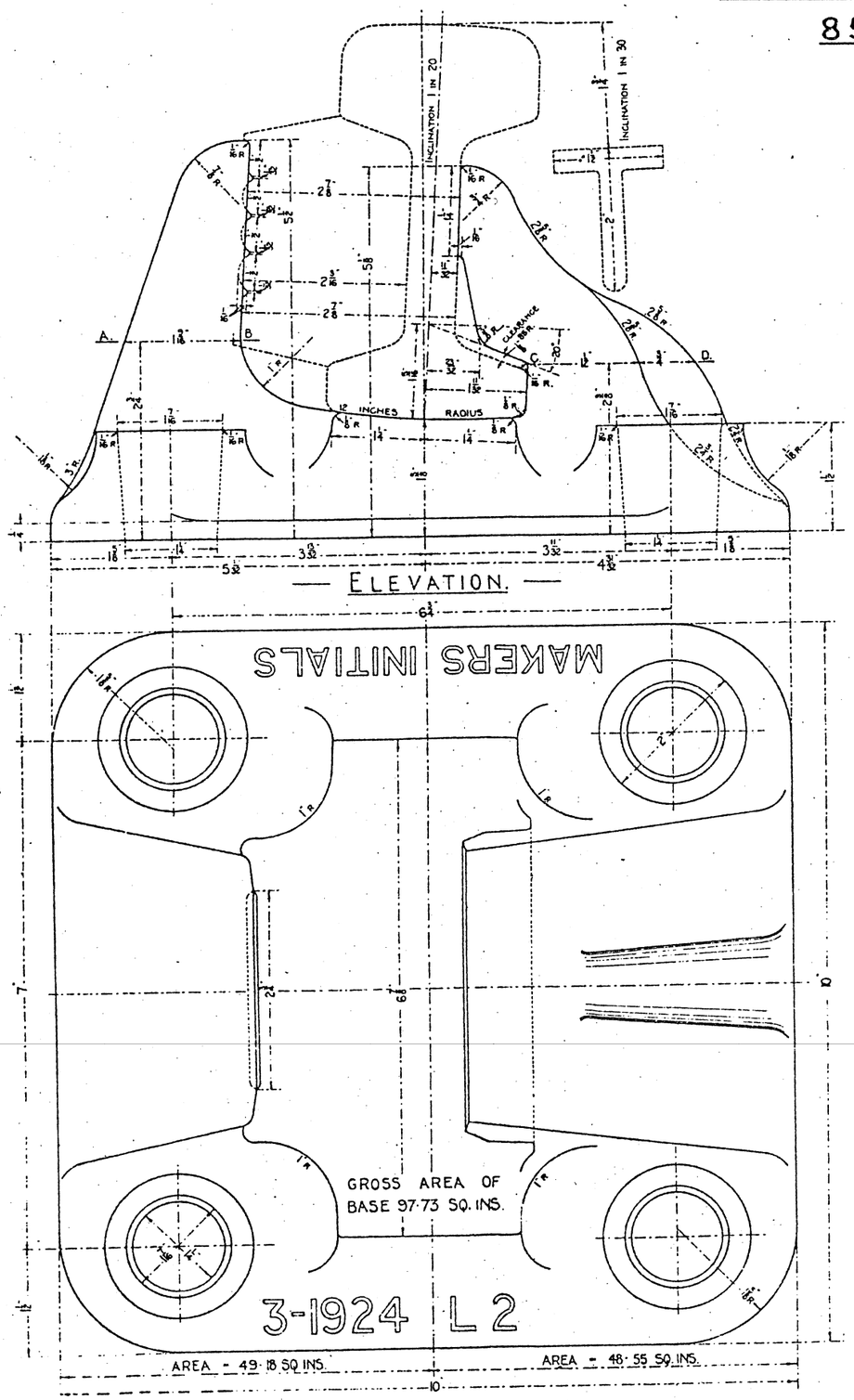

— ELEVATION. —

— PLAN. —

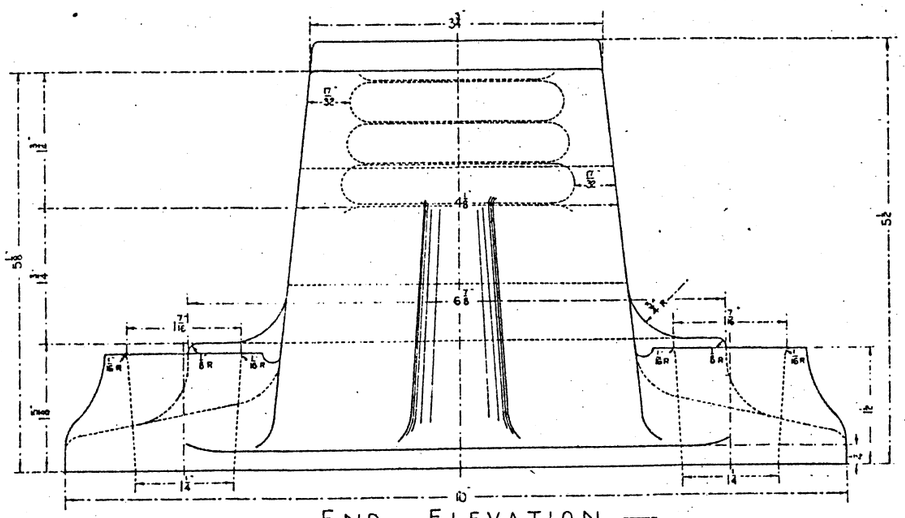

— END ELEVATION. —

THE 90 R. B.S. RAIL CAN ALSO BE USED IN THIS CHAIR.

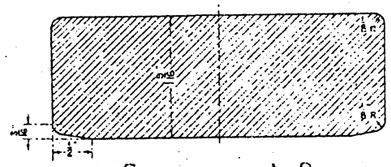

— SECTION A B. —

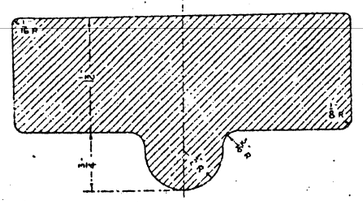

— SECTION C. D. —

— HALF FULL SIZE. —

STANDARD RAILWAY EQUIPMENT — PERMANENT WAY.

No. 54.

CHECK RAIL CHAIR FOR CURVES. 66 LB.

85 R. B.S. RUNNING RAIL — 85 R. B.S. NEW OR 85 R. B.S WORN RAIL FOR CHECK.

2 INS. FLANGEWAY CLEARANCE.

— HALF FULL SIZE. —

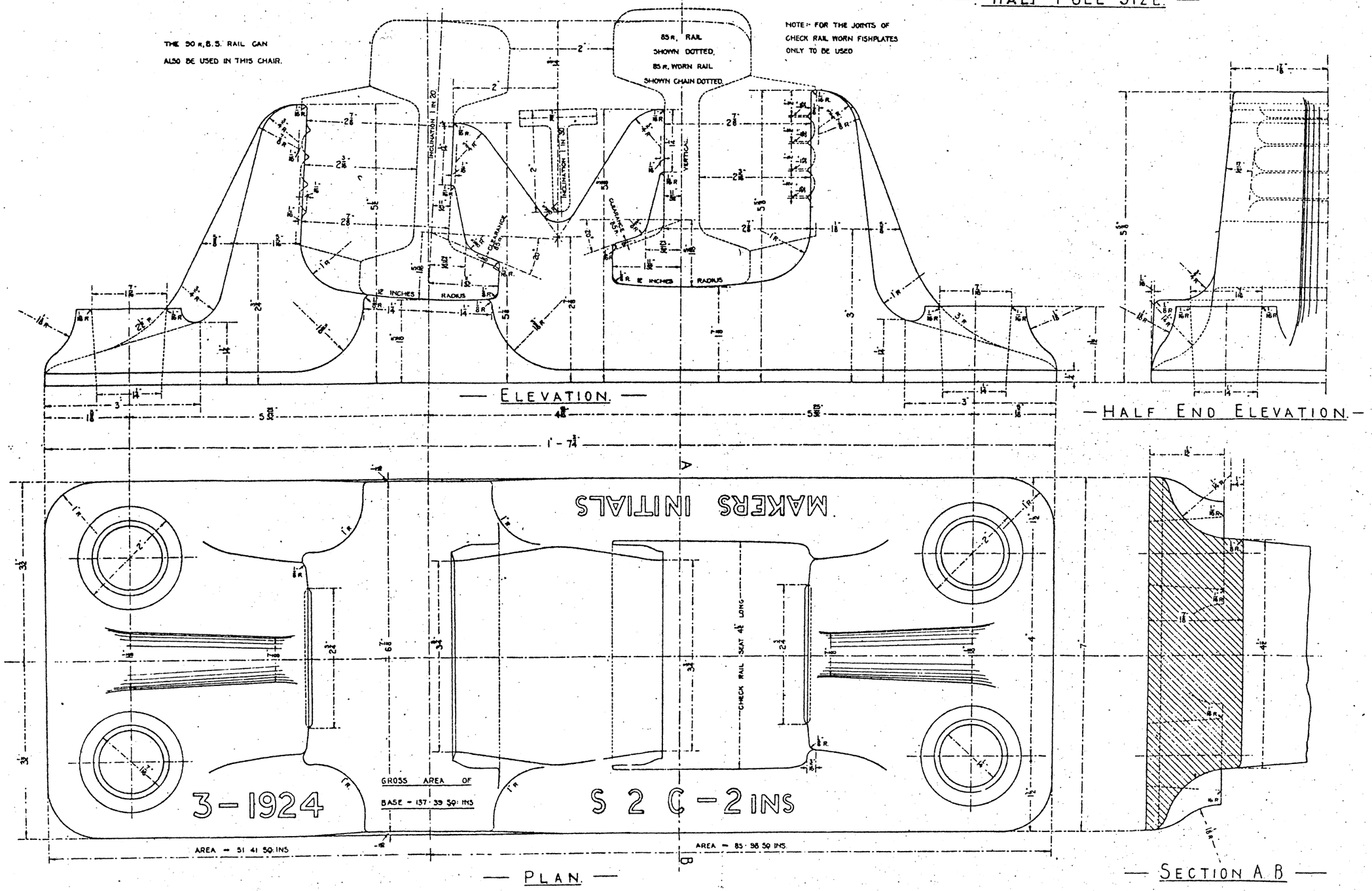

— ELEVATION. —

— HALF END ELEVATION. —

— PLAN. —

— SECTION A B —

STANDARD RAILWAY EQUIPMENT — PERMANENT WAY. No. 54A.

END CHECK RAIL CHAIR FOR CURVES. 70 LB.

85 R. B.S. RUNNING RAIL — 85 R. B.S. NEW OR 85 R. B.S. WORN RAIL FOR CHECK.

— HALF FULL SIZE. —

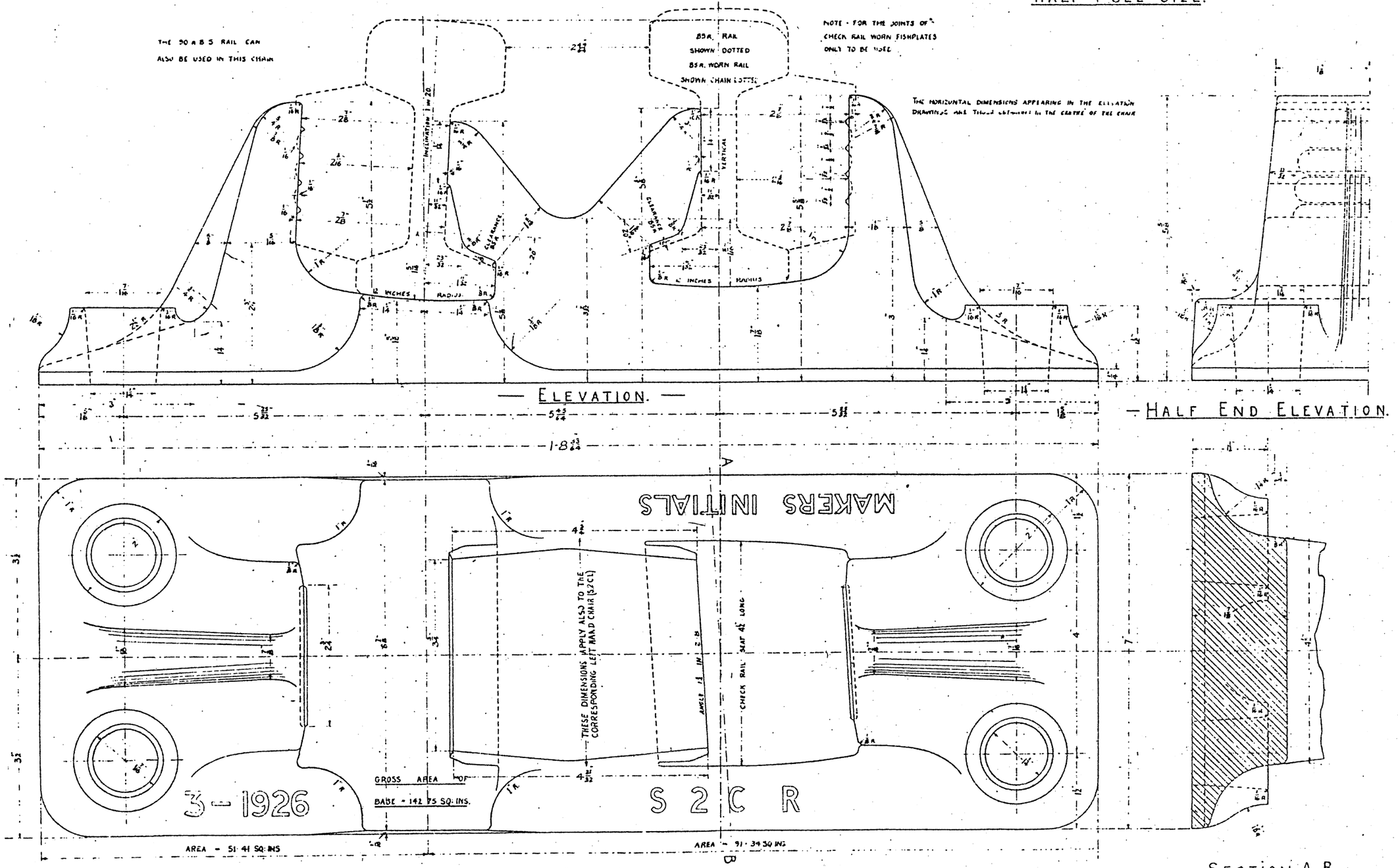

STANDARD RAILWAY EQUIPMENT — PERMANENT WAY.

GUARD RAIL CHAIR.

85R. B.S. RAIL.

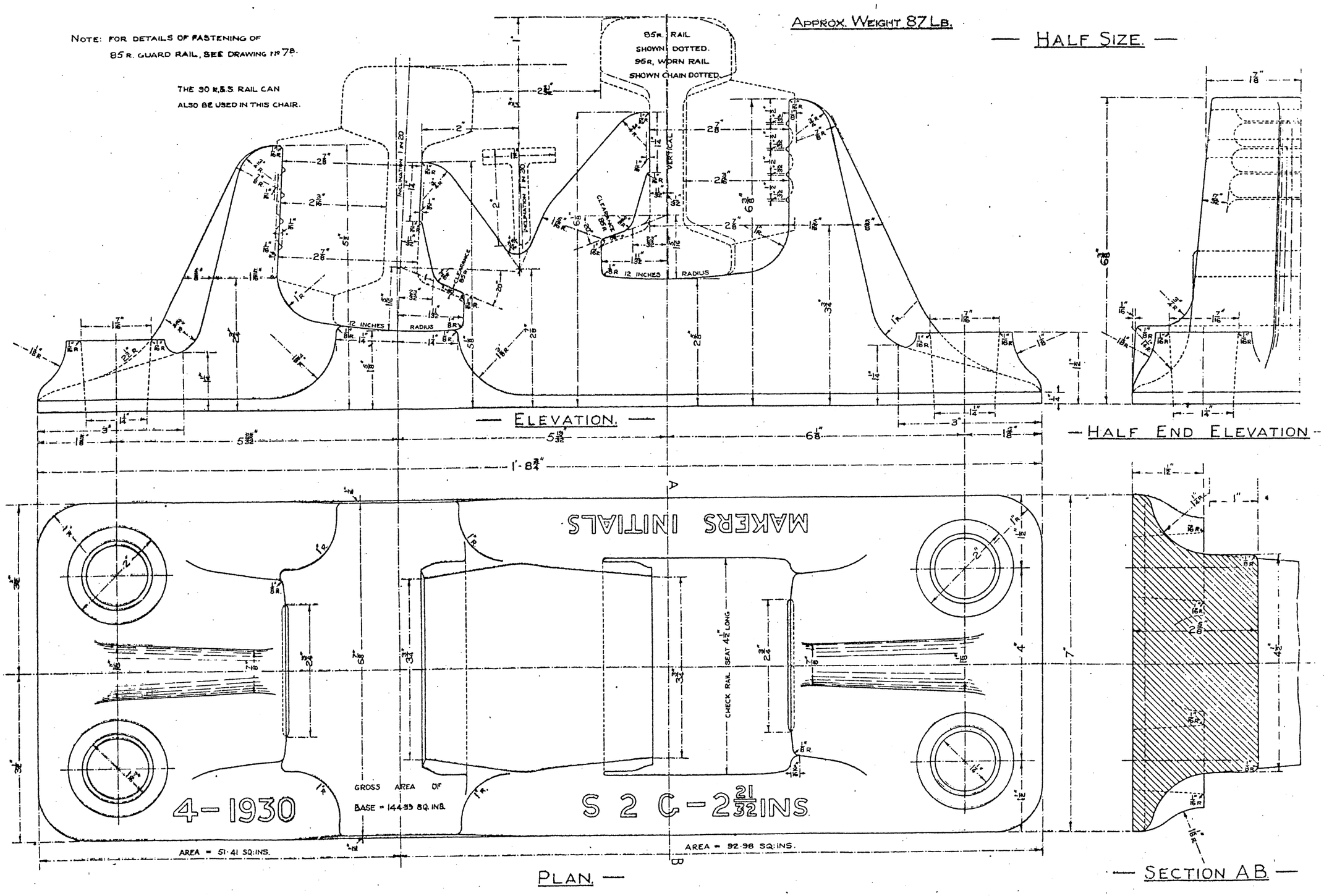

STANDARD RAILWAY EQUIPMENT — PERMANENT WAY.

"A" UNDERCUT SWITCHES.

85 R. B.S. RAIL.

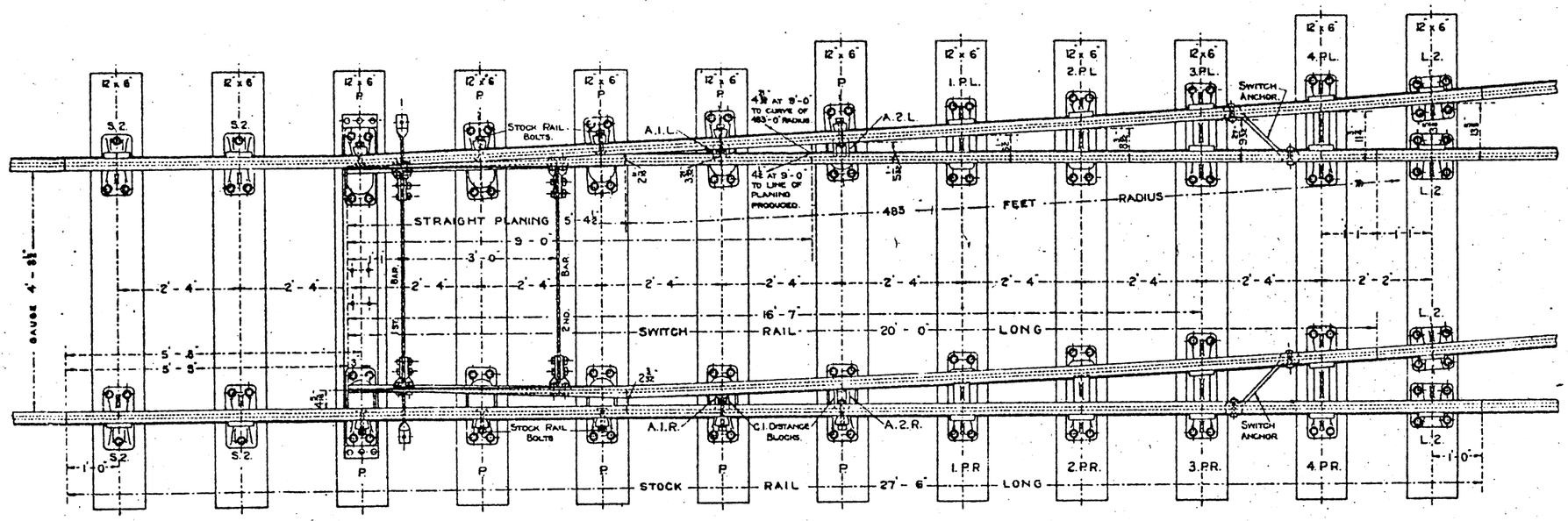

— PLAN. —

SCALE :- ¾ INCH = 1 FOOT.

NOTES.

For Details of Chairs, see Drawing Nº 65.
" " of Stretcher Bars and Soleplate see Drawings Nºs 67, 68 and 69.
For Details of Switch Anchor, C.I. Distance Blocks Stock Rail and Stud Bolts, see Drawing Nº 66.
For Details of S.2. Chair, see Drawing Nº 52.
" " of L.2. Chair, see Drawing Nº 53.

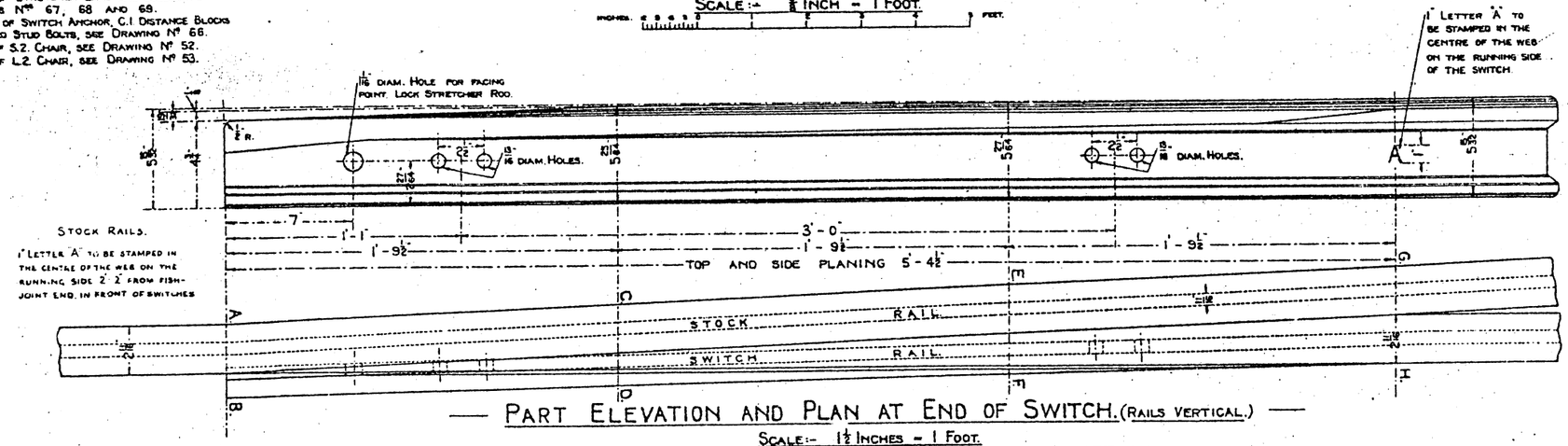

— PART ELEVATION AND PLAN AT END OF SWITCH. (RAILS VERTICAL.) —

SCALE :- 1½ INCHES = 1 FOOT.

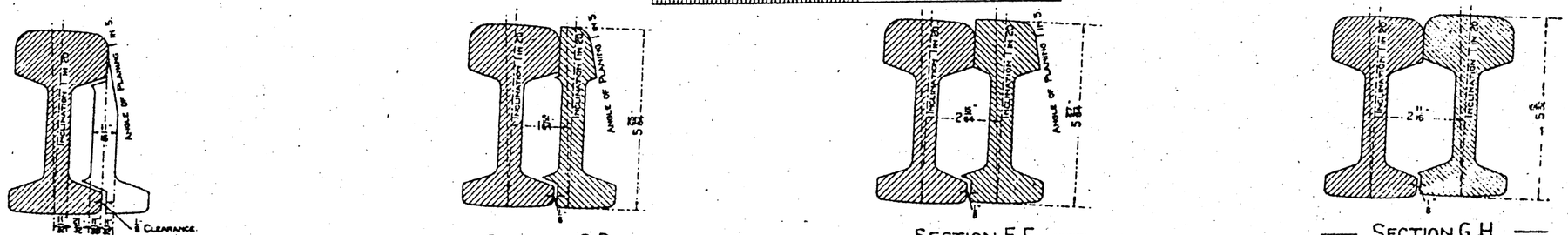

— SECTION A.B. — — SECTION C.D. — — SECTION E.F. — — SECTION G.H. —

— QUARTER FULL SIZE. —

"B" UNDERCUT SWITCHES.

85 R. B.S. RAIL.

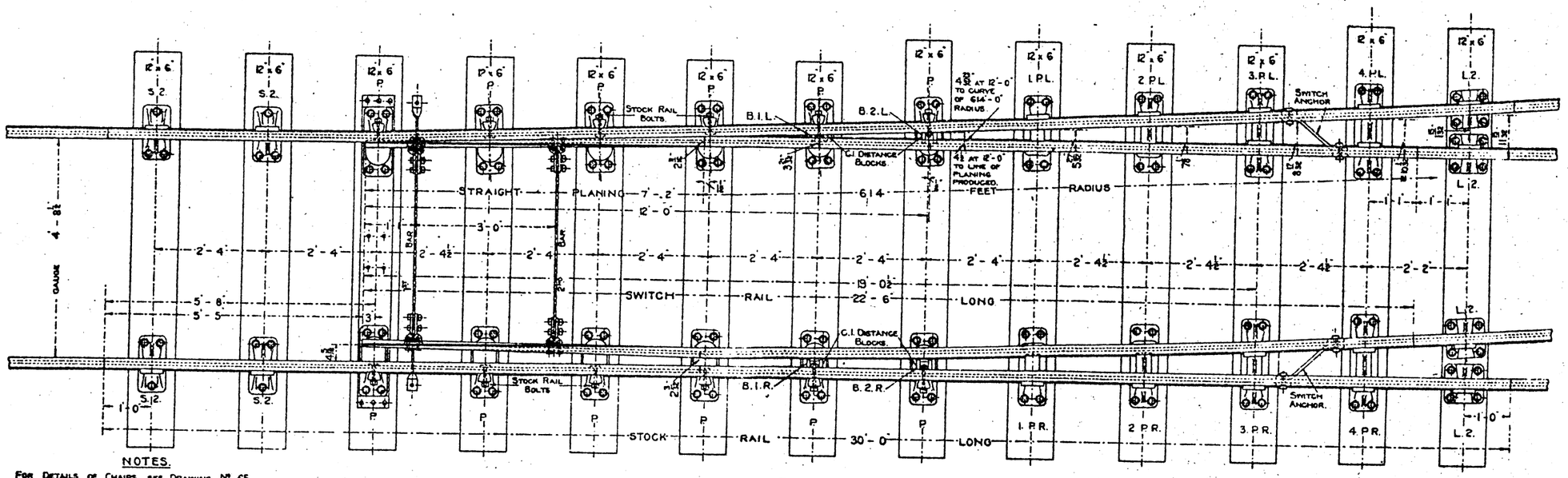

— PLAN. —

SCALE:- ⅜ INCH = 1 FOOT.

NOTES.

For Details of Chairs, see Drawing Nº 65
" " of Stretcher Bars and Soleplate, see Drawing Nos 67, 68 and 69
For Details of Switch Anchor, C.I. Distance Blocks, Stock Rail and Stud Bolts, see Drawing Nº 66.
For Details of S.2. Chair, see Drawing Nº 52.
" " of L.2. Chair, see Drawing Nº 53.

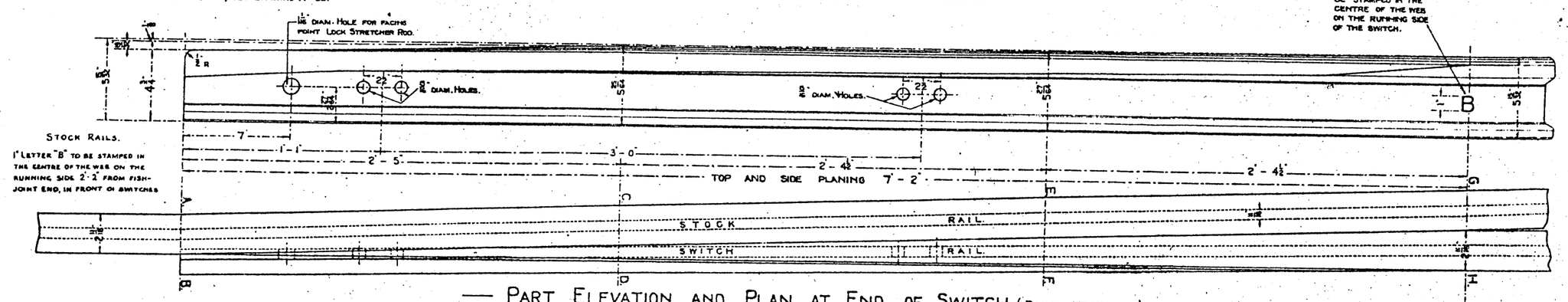

— PART ELEVATION AND PLAN AT END OF SWITCH. (RAILS VERTICAL.) —

SCALE:- 1½ INCHES = 1 FOOT.

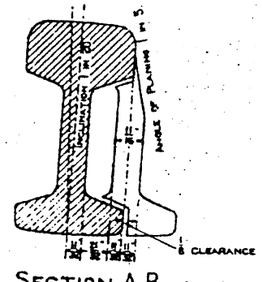

— SECTION A.B. —

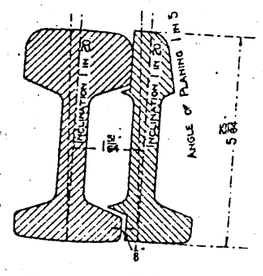

— SECTION C.D. —

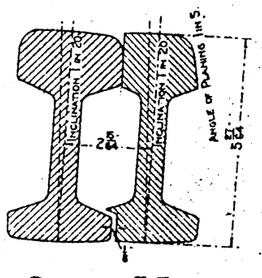

— SECTION E.F. —

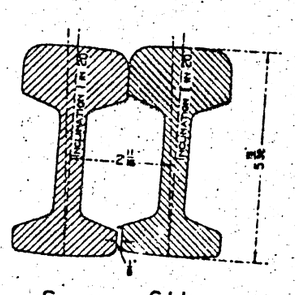

— SECTION G.H. —

— QUARTER FULL SIZE. —

STANDARD RAILWAY EQUIPMENT — PERMANENT WAY. Nº 57.

"C" UNDERCUT SWITCHES.

85 R. B.S. RAIL.

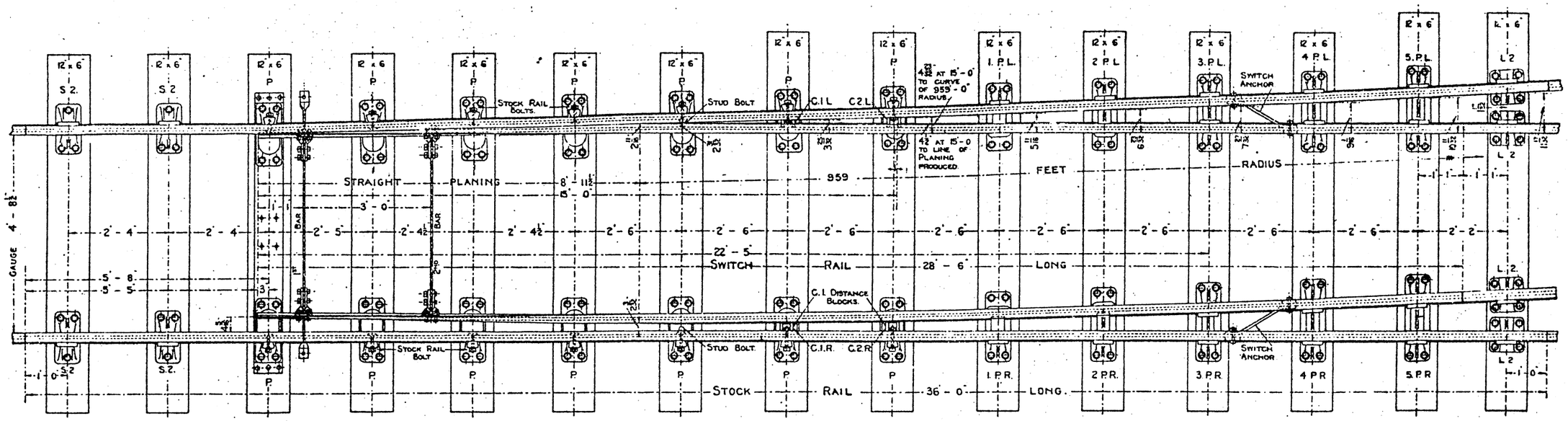

— PLAN. —

SCALE:— 3/8 INCH — 1 FOOT

NOTES.

For Details of Chairs, see Drawing Nº 65.
" " of Stretcher Bars, and Soleplate, see Drawing Nºs 67, 68, and 69.
For Details of Switch Anchor, C.I. Distance Blocks, Stock Rail, and Stud Bolts, see Drawing Nº 66.
For Details of S.2 Chair, see Drawing Nº 52.
" " of L.2. Chair, see Drawing Nº 53.

Stock Rails
Lettered "C" to be stamped in the centre of the web on the running side 2½" from right joint end, in front of switches

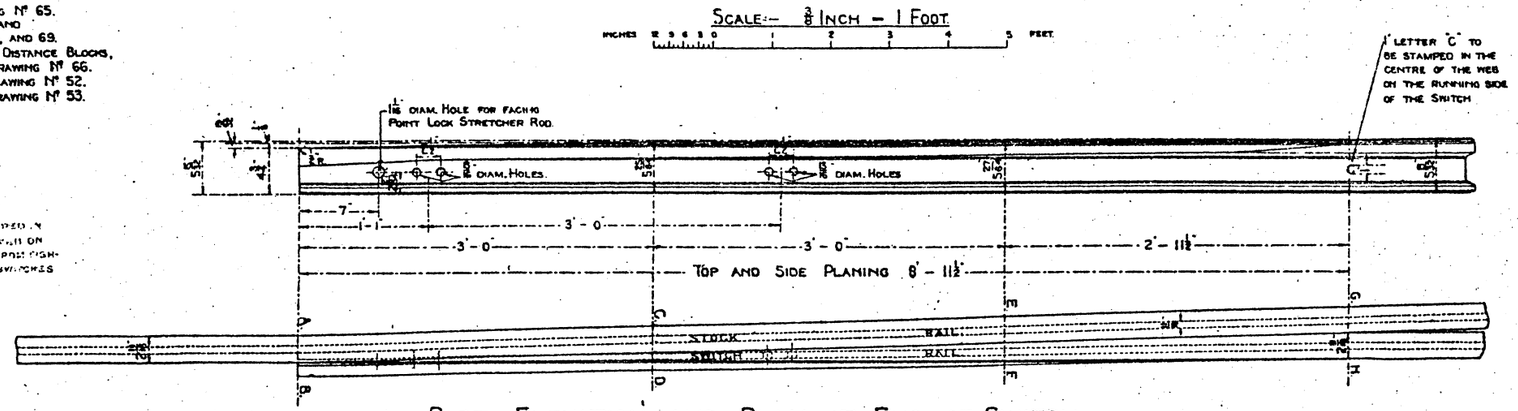

— PART ELEVATION AND PLAN AT END OF SWITCH. (RAILS VERTICAL) —

SCALE:— ¾ INCHES — 1 FOOT.

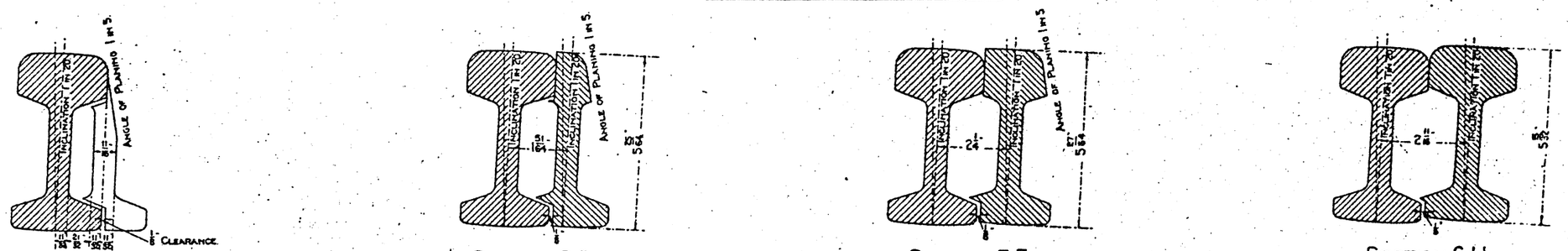

— SECTION A.B. — — SECTION C.D. — — SECTION E.F. — — SECTION G.H. —

— QUARTER FULL SIZE —

STANDARD RAILWAY EQUIPMENT — PERMANENT WAY.

"D" UNDERCUT SWITCHES.

85 R. B.S. RAIL.

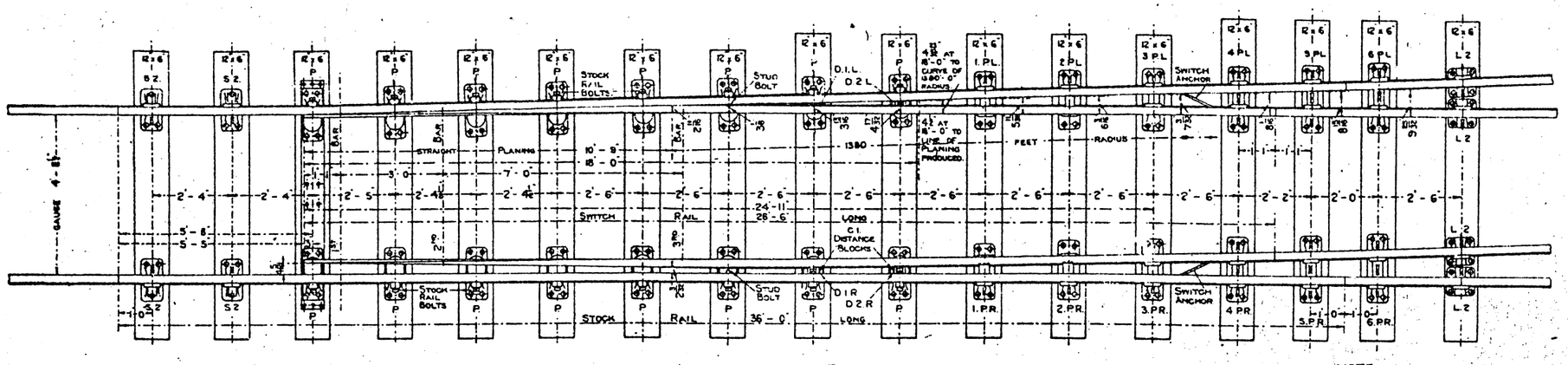

— PLAN. —

SCALE:- ¼ INCH = 1 FOOT.

NOTES.

For Details of Chairs, see Drawing Nº 65.
" " of Stretcher Bars, and Soleplate, see Drawings Nos 67, 68 and 69.
For Details of Switch Anchor, C.I. Distance Blocks, Stock Rail and Stud Bolts, see Drawing Nº 66.
For Details of S.2. Chair, see Drawing Nº 52.
" " of L.2. Chair, see Drawing Nº 53.

NOTE.

Where Track Circuiting is in operation Switch and Stock Rails will require to be lengthened, or, alternatively, closure rails used.

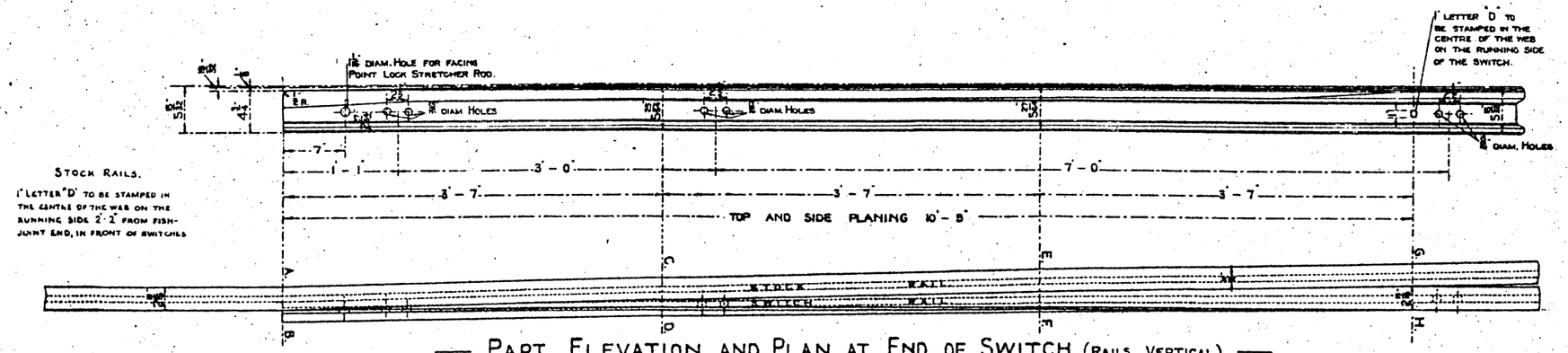

— PART ELEVATION AND PLAN AT END OF SWITCH. (RAILS VERTICAL) —

SCALE:- ¾ INCH = 1 FOOT.

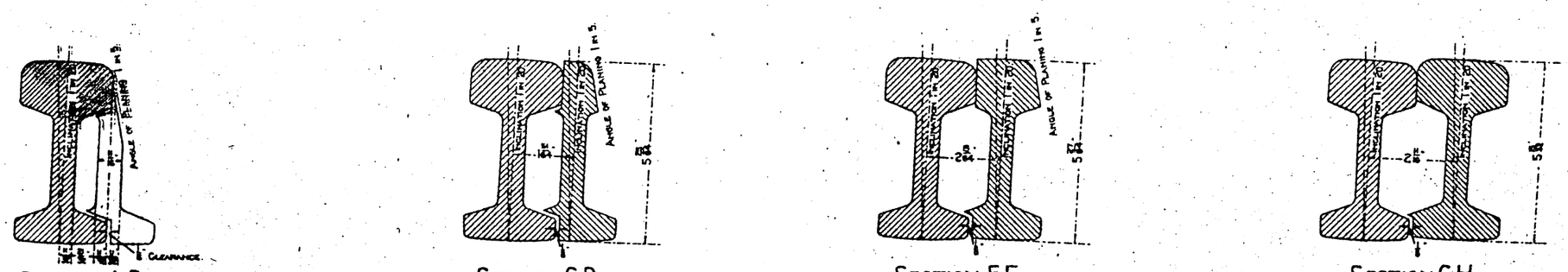

— SECTION A.B. — — SECTION C.D. — — SECTION E.F. — — SECTION G.H. —

— QUARTER FULL SIZE. —

STANDARD RAILWAY EQUIPMENT — PERMANENT WAY. Nº 59.

"E" UNDERCUT SWITCHES.

85 R. B.S. RAIL.

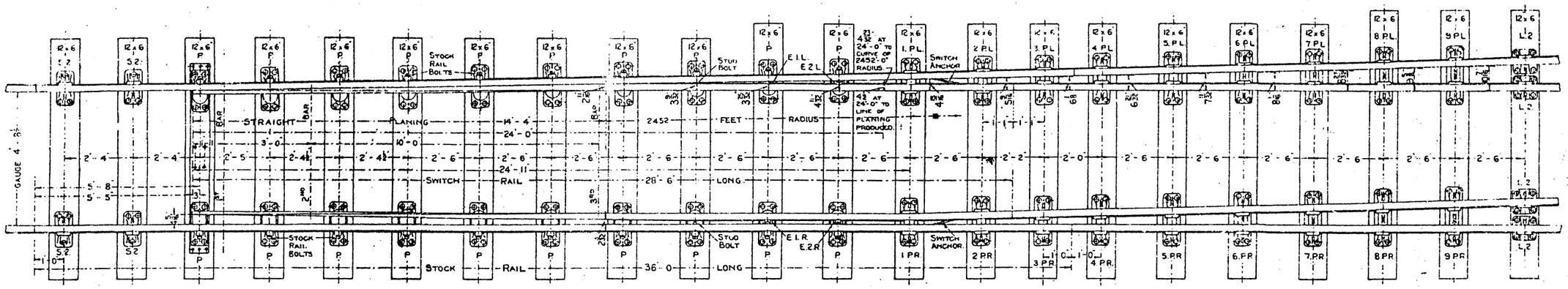

— PLAN. —

SCALE:- ¼ INCH = 1 FOOT.

NOTES.

For Details of Chairs, see Drawing Nº 65.
" " of Stretcher Bars, and Soleplate, see Drawing Nºs 67, 68 and 69
For Details of Switch Anchor, C.I. Distance Blocks, Stock Rail, and Stud Bolts, see Drawing Nº 66
For Details of S 2 Chair, see Drawing Nº 52
" " of L 2 Chair, see Drawing Nº 53

NOTE

Where Track Circuiting is in operation Switch and Stock Rails will require to be lengthened, or, alternatively, closure rails used

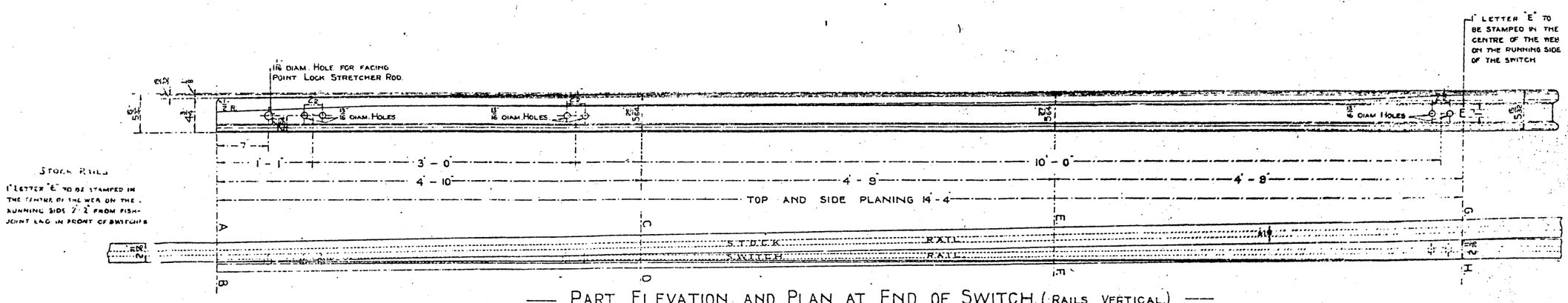

— PART ELEVATION AND PLAN AT END OF SWITCH. (RAILS VERTICAL) —

SCALE:- ¾ INCHES = 1 FOOT.

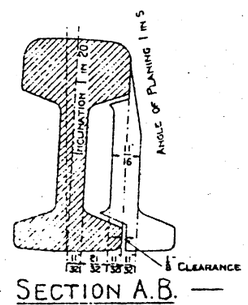

— SECTION A.B. —

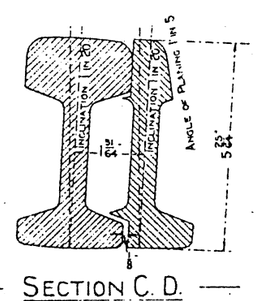

— SECTION C.D. —

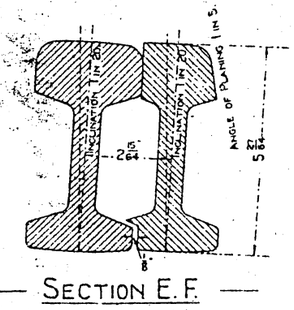

— SECTION E.F. —

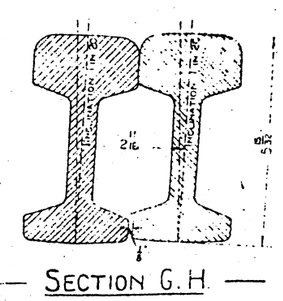

— SECTION G.H. —

QUARTER FULL SIZE.

STANDARD RAILWAY EQUIPMENT — PERMANENT WAY.

"A" STRAICHTCUT SWITCHES.

85 R. B. S. RAIL.

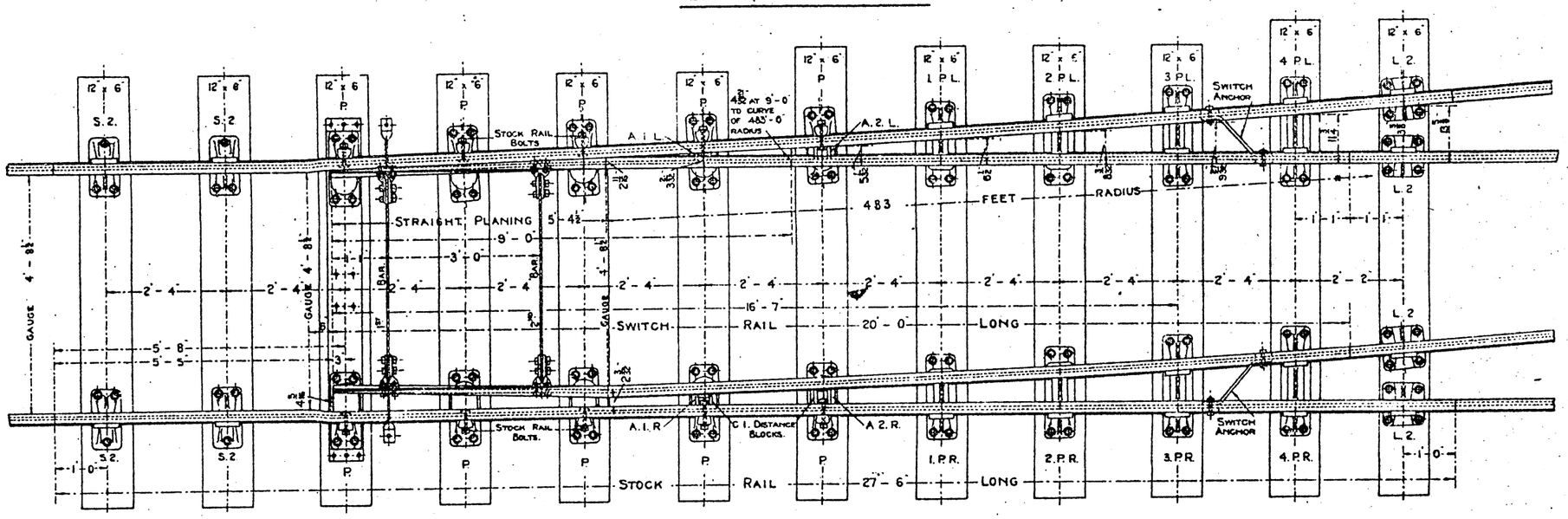

— PLAN. —

Scale:- ¾ Inch = 1 Foot.

NOTES.

For Details of Chairs, see Drawing Nº 65.
" " of Stretcher Bars, and Soleplate, see Drawing Nºs 67, 68 and 69.
For Details of Switch Anchor, C.I. Distance Blocks, Stock Rail and Stud Bolts, see Drawing Nº 66.
For Details of S. 2. Chair, see Drawing Nº 52.
" " of L. 2. Chair, see Drawing Nº 53.

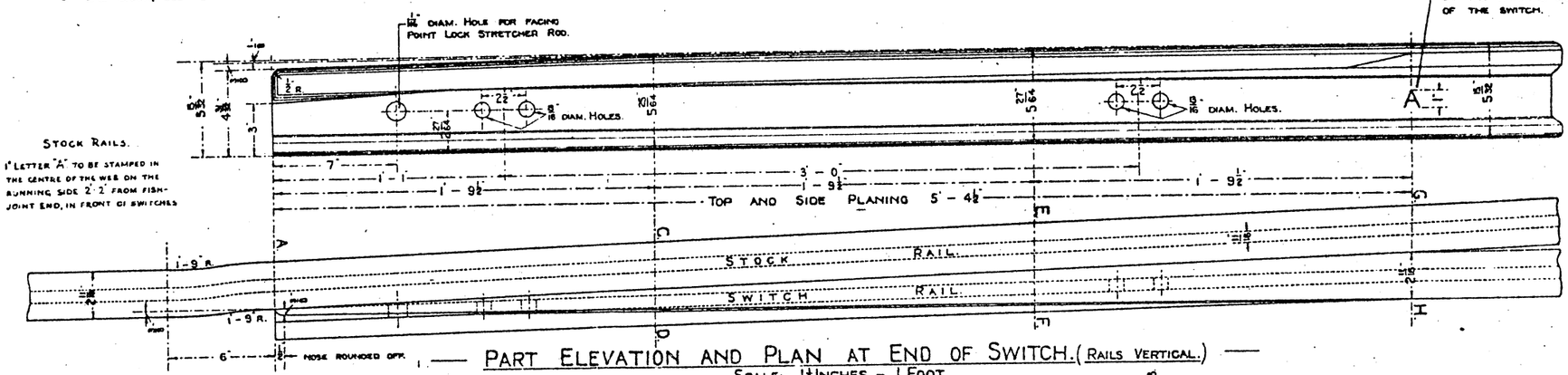

— Part Elevation and Plan at End of Switch. (Rails Vertical.) —

Scale:- 1½ Inches = 1 Foot.

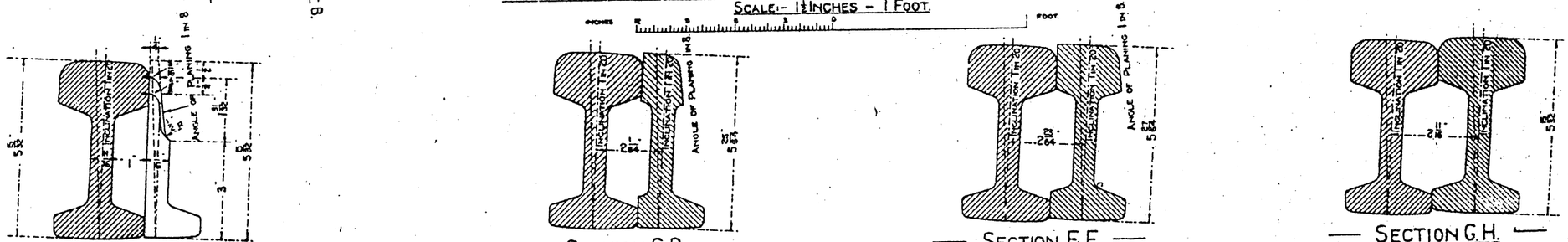

— Section A.B. — — Section C.D. — — Section E.F. — — Section G.H. —

— Quarter Full Size. —

"B" STRAICHTCUT SWITCHES.

85 R. B.S. RAIL.

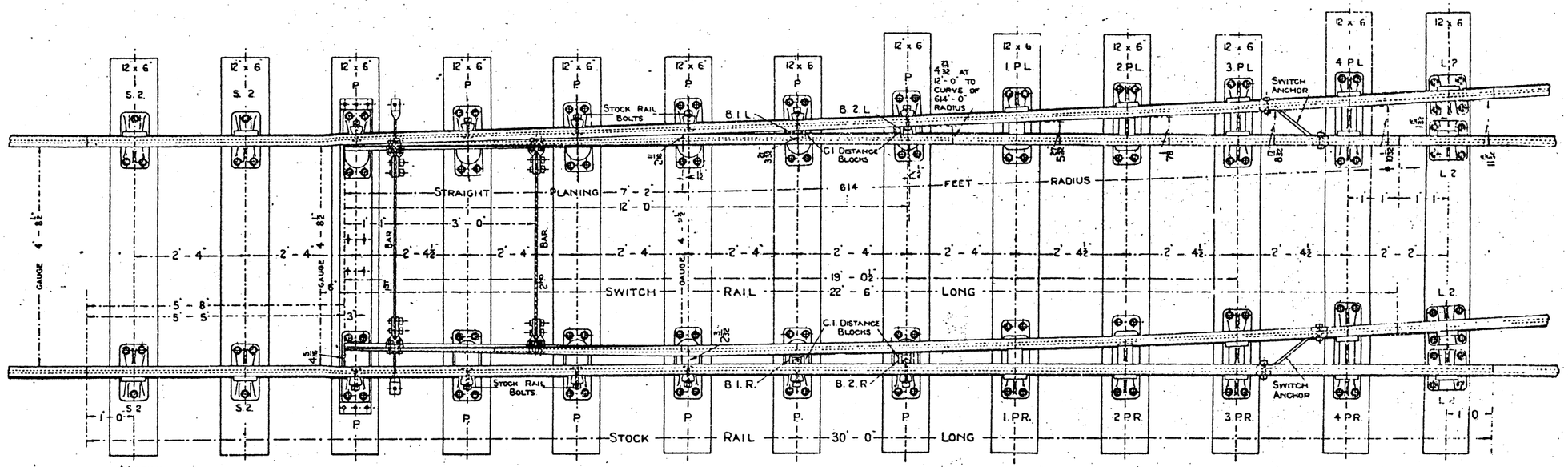

— PLAN. —

SCALE:- ⅜ INCH - 1 FOOT.

NOTES.

For Details of Chairs, see Drawing N° 65.
" " of Stretcher Bars, and Soleplate, see Drawing Nos 67, 68 and 69.
For Details of Switch Anchor, C.I. Distance Blocks, Stock Rail and Stud Bolts, see Drawing N° 66.
For Details of S.2. Chair, see Drawing N° 52.
" " of L.2. Chair, see Drawing N° 53.

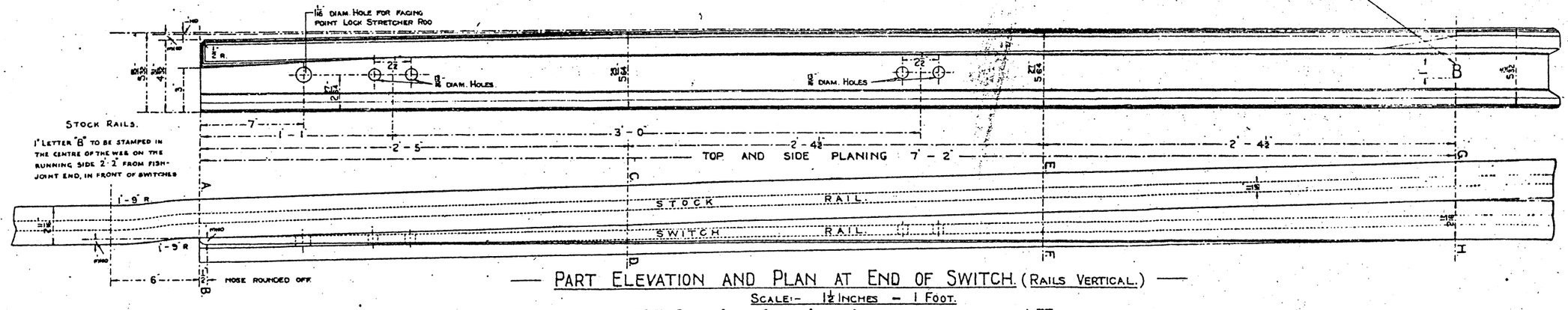

— PART ELEVATION AND PLAN AT END OF SWITCH. (RAILS VERTICAL.) —

SCALE:- 1½ INCHES - 1 FOOT.

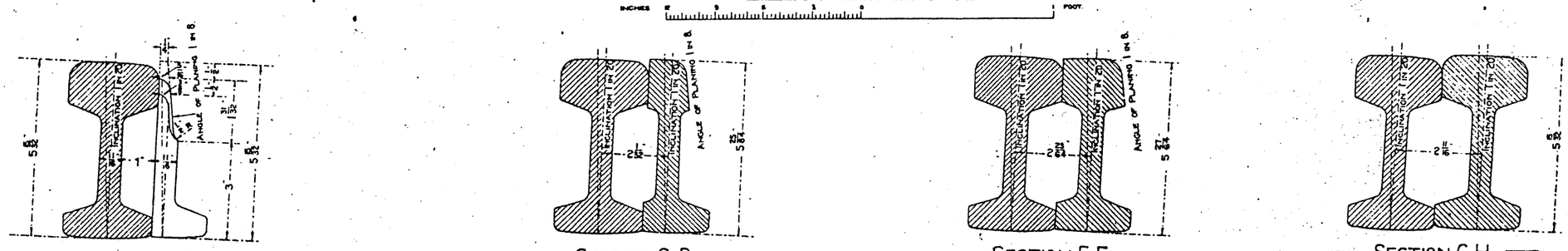

— SECTION A.B. — — SECTION C.D. — — SECTION E.F. — — SECTION G.H. —

— QUARTER FULL SIZE —

STANDARD RAILWAY EQUIPMENT — PERMANENT WAY.

"C" STRAICHTCUT SWITCHES.

85 R. B. S. RAIL.

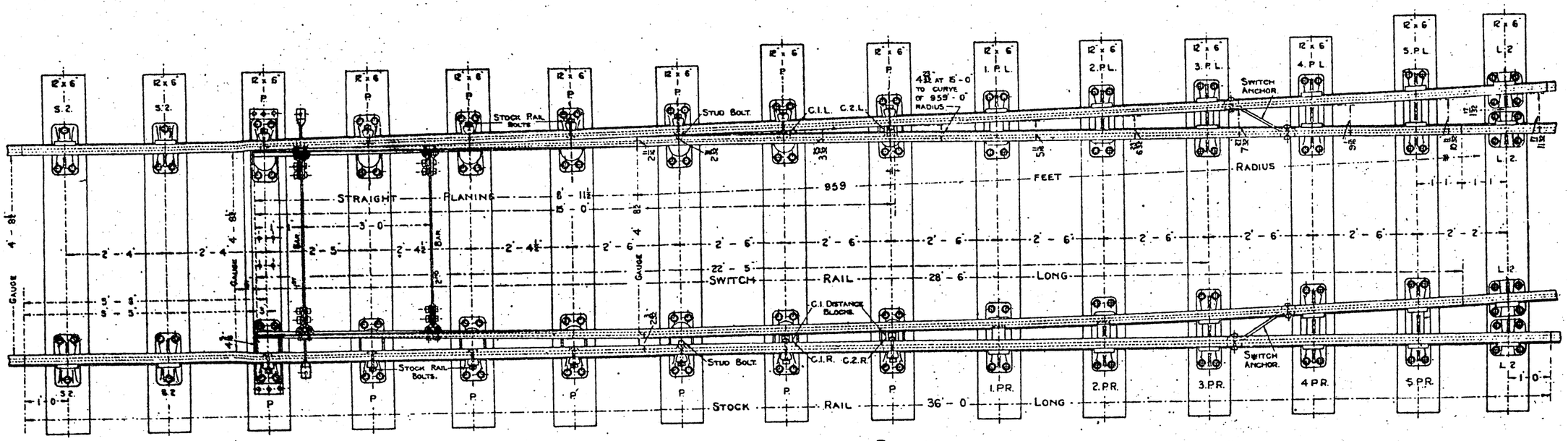

— PLAN. —

Scale:- ⅜ Inch = 1 Foot.

Notes.

For Details of Chairs, see Drawing No. 65.
" " of Stretcher Bars, and Soleplate, see Drawing Nos. 67, 68 and 69.
For Details of, Switch Anchor, C.I. Distance Blocks, Stock Rail, and Stud Bolts, see Drawing No. 66.
For Details of S.2. Chair, see Drawing No. 52.
" " of L.2. Chair, see Drawing No. 53.

Stock Rails.

1 Letter "C" to be stamped in the centre of the web on the running side 2'-2" from fish-joint end, in front of switches.

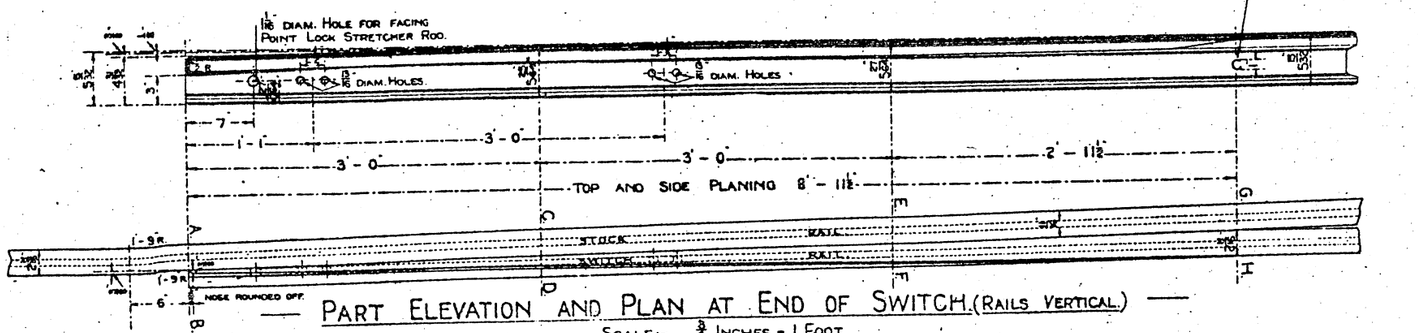

— Part Elevation and Plan at End of Switch. (Rails Vertical.) —

Scale:- ¾ Inches = 1 Foot.

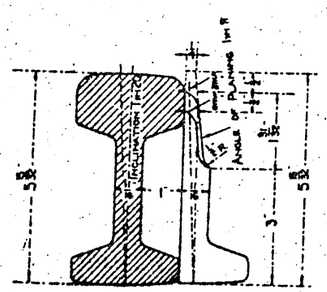

— Section A.B. —

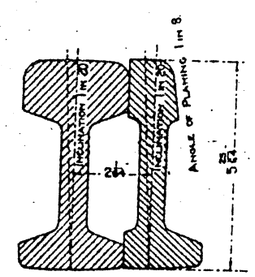

— Section C.D. —

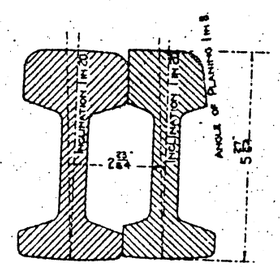

— Section E.F. —

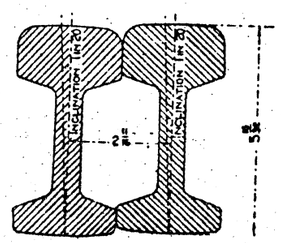

— Section G.H. —

— Quarter Full Size. —

STANDARD RAILWAY EQUIPMENT — PERMANENT WAY.

"D" STRAICHTCUT SWITCHES.

85 R. B.S. RAIL.

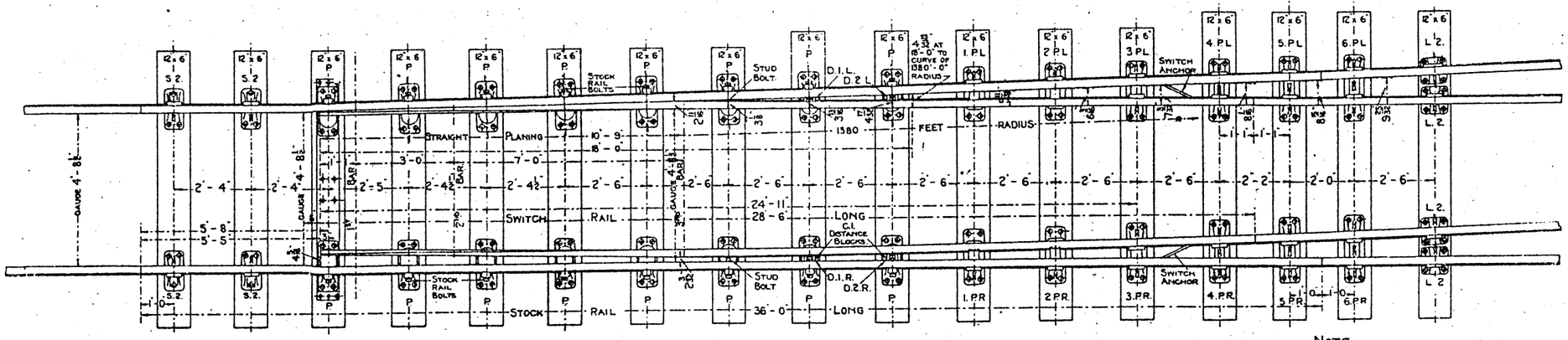

— PLAN. —

SCALE:- ¼ INCH = 1 FOOT.

INCHES 12 9 6 3 0 1 2 3 4 5 6 7 8 FEET.

NOTES.

For Details of Chairs, see Drawing Nº 65.
" " of Stretcher Bars, and Soleplate, see Drawing Nºs 67, 68 and 69.
For Details of Switch Anchor, C.I. Distance Blocks, Stock Rail and Stud Bolts, see Drawing Nº 66.
For Details of S.2 Chair, see Drawing Nº 52.
" " of L.2. Chair, see Drawing Nº 53.

NOTE.

Where Track Circuiting is in operation Switch and Stock Rails will require to be lengthened, or, alternatively, closure rails used.

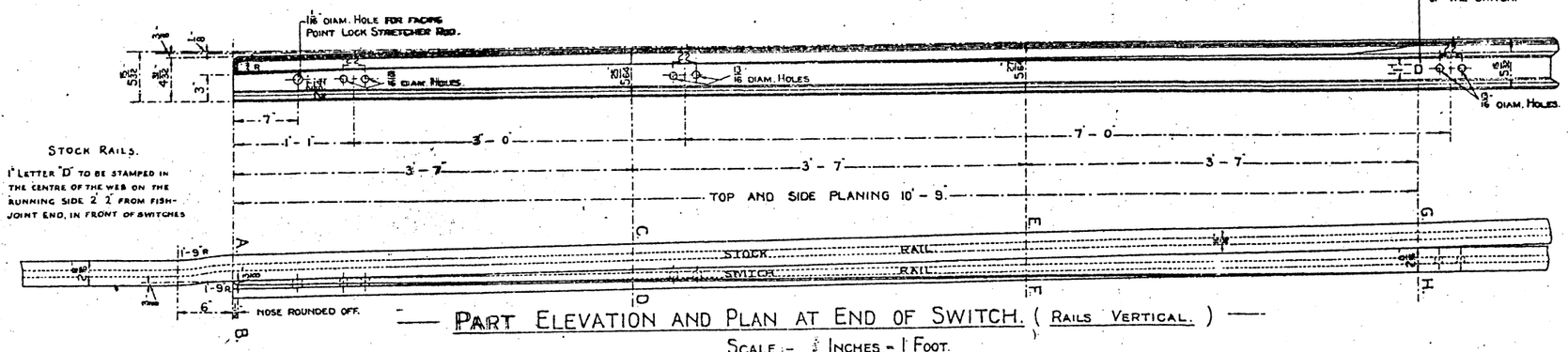

— PART ELEVATION AND PLAN AT END OF SWITCH. (RAILS VERTICAL.) —

SCALE :- ½ INCHES = 1 FOOT.

INCHES 12 9 6 3 0 2 FEET

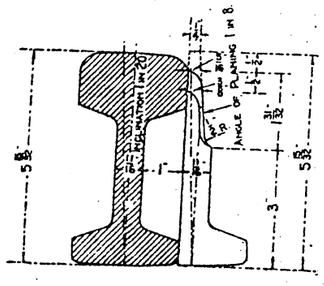

— SECTION A. B. —

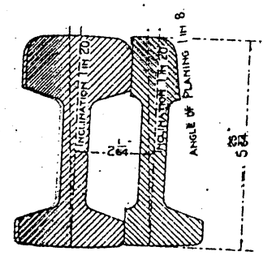

— SECTION C. D. —

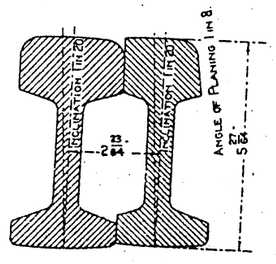

— SECTION E. F. —

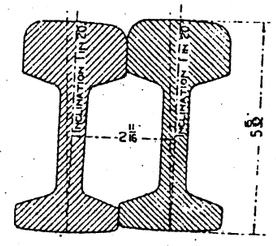

— SECTION G. H. —

QUARTER FULL SIZE.

STANDARD RAILWAY EQUIPMENT — PERMANENT WAY.

No. 64.

"E" STRAICHTCUT SWITCHES.

85 R. B.S. RAIL.

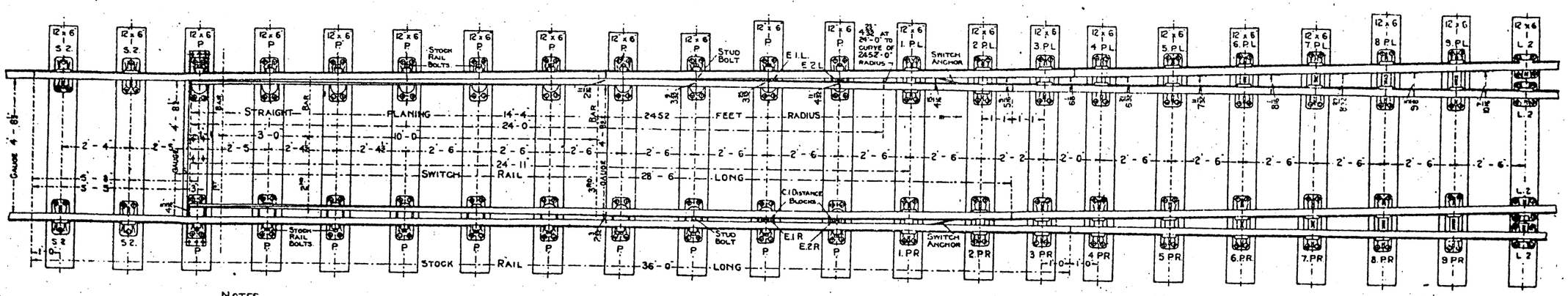

NOTES.

For Details of Chairs, see Drawing No. 65.
" " of Stretcher Bars, and Soleplate, see Drawing Nos. 67, 68 and 69.
For Details of Switch Anchor, C.I. Distance Blocks, Stock Rail and Stud Bolts, see Drawing No. 66.
For Details of S.2. Chair, see Drawing No. 52.
" " of L.2. Chair, see Drawing No. 53.

— PLAN. —

Scale:- ¼ Inch = 1 Foot.

NOTE.

Where Track Circuiting is in operation Switch and Stock Rails will require to be lengthened, or alternatively, closure rails used.

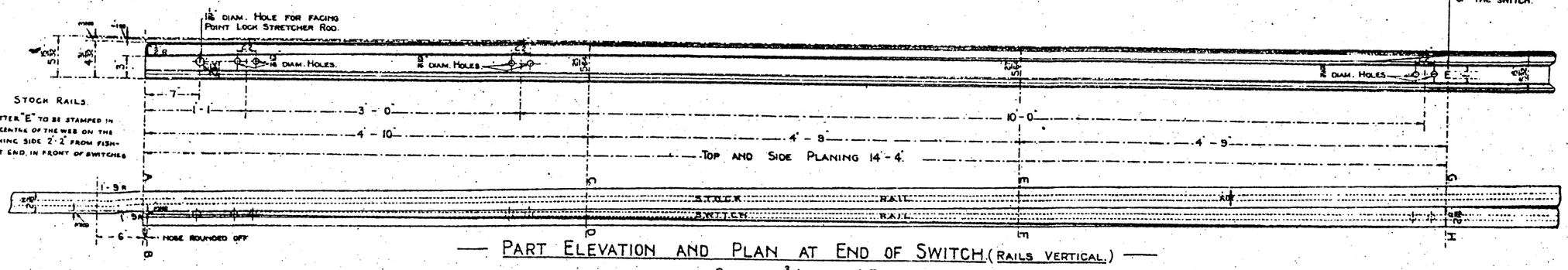

— Part Elevation and Plan at End of Switch (Rails Vertical.) —

Scale:- ¾ Inches = 1 Foot.

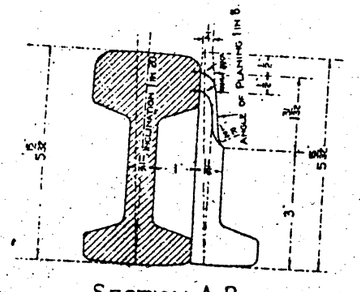

— Section A.B. —

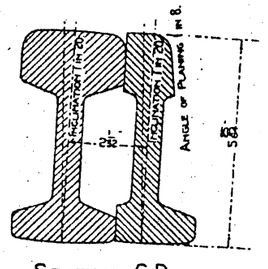

— Section C.D. —

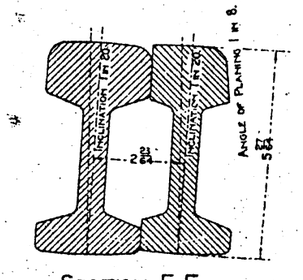

— Section E.F. —

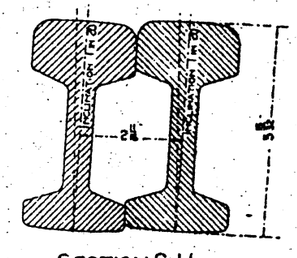

— Section G.H. —

— Quarter Full Size —

STANDARD RAILWAY EQUIPMENT — PERMANENT WAY.

Nº 65.

CHAIRS FOR SWITCHES.

85 R. B.S. RAIL.

P. CHAIR.

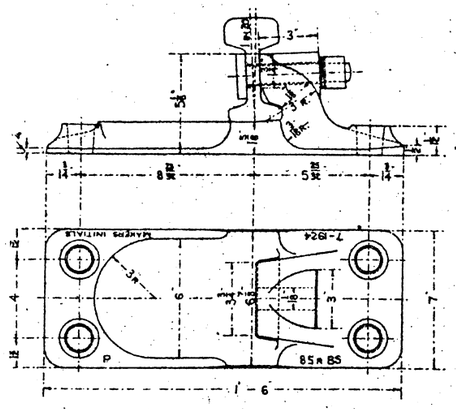

APPROX. WEIGHT — 53 LB.

A, B, C, AND D SWITCHES.
1. P. R. AND 2. P. R. CHAIRS

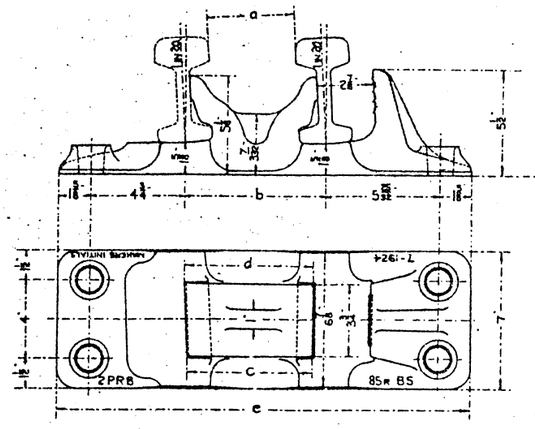

E. SWITCHES.
1. P. R. AND 2. P. R. CHAIRS.

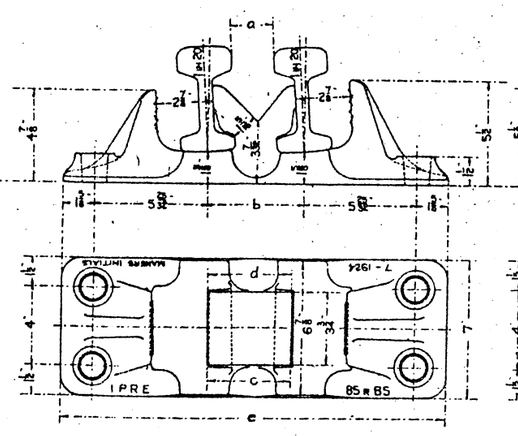

A, B, C, D AND E SWITCHES.
3. P. R. TO 9. P. R. CHAIRS.

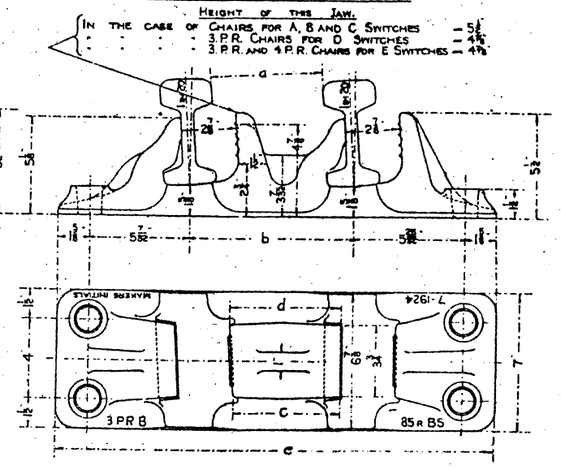

— ELEVATION AND PLAN OF CHAIRS —

SCALE:- 1½ INCHES = 1 FOOT.

INCHES. 6 3 0 3 6 9 12 FOOT.

— DETAILS OF KEY JAW —

— QUARTER FULL SIZE. —

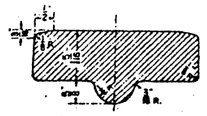

SECTION A.B.

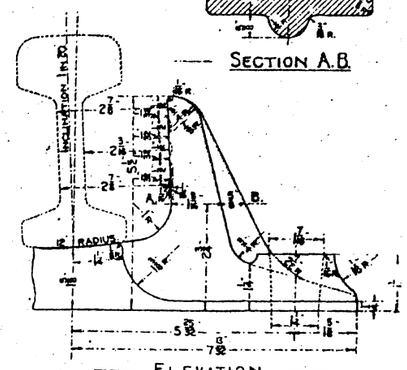

ELEVATION.

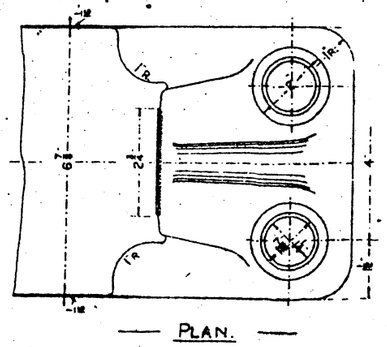

PLAN.

NOTES.

THIS DRAWING IN CONJUNCTION WITH THE DIMENSIONAL TABLES AND ALSO THE NOTES FOLLOWING FURNISH ALL INFORMATION REQUISITE FOR THE MANUFACTURE OF SPECIAL CHAIRS REQUIRED FOR STANDARD SWITCHES "A", "B", "C", "D", AND "E".

THE RAIL JAWS OF ALL SWITCH CHAIRS OTHER THAN THE "P" CHAIRS TO CONFORM TO THE PROFILE OF THE RAIL JAW OF THE S 2. CHAIR (DRAWING Nº 52.) SUBJECT, HOWEVER, TO THE ESSENTIAL DIFFERENCE IN THE HORIZONTAL INCLINATION NECESSITATED BY THE ANGLE OF THE SWITCH OR STOCK RAILS.

THE DETAILS OF THE KEY JAW ARE SHEWN ON THIS DRAWING, AND THIS DRAWING IS TYPICAL OF THE KEY JAWS FOR ALL SWITCH CHAIRS, SUBJECT TO THE ESSENTIAL DIFFERENCE IN THE HORIZONTAL INCLINATION, NECESSITATED BY THE ANGLE OF THE SWITCH, AND SUBJECT ALSO TO THE HEIGHT BEING 4 7/8" INSTEAD OF 5 1/8" IN THE CASE OF THE SWITCH JAWS OF THE 1. P. R. AND 2. P. R. CHAIRS ("E" SWITCHES ONLY.)

THE HORIZONTAL DIMENSIONS APPEARING ON THE ELEVATION DRAWINGS APPLY IN EVERY CASE TO THE CENTRE OF THE CHAIR.

SWITCH AND STOCK RAILS TO BE CANTED TOWARDS THE RUNNING SIDE AT AN INCLINATION OF 1 IN 20 FROM THE VERTICAL.

THE HOLES IN THE CHAIR BASES TO TAKE THE STANDARD FERRULE AND SCREW.

THE LETTER A, B, C, D OR E; TO BE CAST ON EACH SPECIAL P.R. OR P.L. CHAIR, TO INDICATE FOR WHICH LENGTH OF SWITCHES, A, B, C, D, OR E, IT HAS BEEN DESIGNED. THE DATE OF MANUFACTURE, MAKER'S INITIALS, AND WEIGHT OF RAIL DESIGNED FOR, IS ALSO TO BE CAST ON EACH CHAIR.

DIMENSIONS OF 1. P. R. AND 2. P. R. CHAIRS.

SWITCH.	CHAIR.	a.	b	c.	d	e	APPROX. WEIGHT.
A.	1. P.R.A.	3 13/16"	6 1/2"	5 11/16"	5 23/32"	1'-8 3/32"	63 LB.
	2. P.R.A.	5 5/32"	8 3/32"	7 5/16"	7 17/32"	1'-9 7/8"	67 LB
B.	1. P.R.B.	3 5/32"	5 27/32"	5 3/32"	5 1/4"	1'-7 5/8"	62 LB.
	2. P.R.B.	4 7/16"	7 1/8"	6 11/32"	6 17/32"	1'-8 23/32"	65 LB
C.	1. P.R.C.	3"	5 11/16"	4 23/32"	5 1/16"	1'-7 15/32"	61 LB.
	2. P.R.C.	4 1/32"	6 25/32"	5 31/32"	6 3/32"	1'-8 1/2"	64 LB.
D.	1. P.R.D.	2 27/32"	5 11/32"	4 15/32"	4 23/32"	1'-7 1/8"	61 LB
	2. P.R.D.	3 1/2"	6 3/16"	5 15/32"	5 9/16"	1'-7 9/32"	62 LB.
E.	1. P.R.E.	2 1/4"	4 15/16"	4 7/32"	4 9/32"	1'-7 3/4"	66 LB
	2. P.R.E.	2 7/8"	5 9/16"	4 27/32"	4 29/32"	1'-8 3/8"	69 LB.

THE ABOVE DIMENSIONS APPLY ALSO TO THE CORRESPONDING P. L. CHAIRS.

DETAILS ON THIS DRAWING APPLY TO BOTH THE UNDERCUT AND STRAIGHTCUT SWITCHES.

DIMENSIONS OF 3. P. R. TO 9. P. R. CHAIRS.

SWITCH	CHAIR.	a.	b.	c.	d.	e.	APPROX. WEIGHT.
A.	3. P. R. A.	7 5/32"	9 27/32"	6 27/32"	7 3/32"	2'-0 3/32"	76 LB.
	4. P. R. A.	9 1/16"	11 3/4"	8 3/4"	9"	2'-2"	81 LB.
B.	3. P. R. B.	5 27/32"	8 17/32"	5 9/16"	5 3/4"	1'-10 15/32"	73 LB.
	4. P. R. B.	7 11/32"	10 1/32"	7 1/16"	7 1/4"	2'-0 9/32"	77 LB
C.	3. P. R. C.	5 3/32"	7 27/32"	4 29/32"	5 1/16"	1'-10 3/32"	71 LB.
	4. P. R. C.	6 3/8"	9 1/16"	6 1/8"	6 9/32"	1'-11 5/16"	74 LB
	5. P. R. C.	7 21/32"	10 11/32"	7 5/8"	7 9/16"	2'-0 19/32"	78 LB
D.	3. P. R. D.	4 15/32"	7 3/32"	4 5/32"	4 9/32"	1'-9 11/32"	70 LB
	4. P. R. D.	5 3/8"	8 1/16"	5 3/32"	5 1/4"	1'-10 5/16"	72 LB.
	5. P. R. D.	6 1/4"	8 15/16"	6"	6 1/8"	1'-11 3/16"	74 LB.
	6. P. R. D.	7 3/32"	9 25/32"	6 27/32"	6 31/32"	2'-0 1/32"	76 LB.
E.	3. P. R. E.	3 7/16"	6 1/8"	3 3/16"	3 9/32"	1'-8 3/8"	68 LB.
	4. P. R. E.	3 31/32"	6 21/32"	3 23/32"	3 15/16"	1'-8 29/32"	69 LB.
	5. P. R. E.	4 27/32"	7 11/32"	4 7/16"	4 17/32"	1'-9 29/32"	70 LB
	6. P. R. E.	5 3/8"	8 1/16"	5 5/32"	5 1/4"	1'-10 5/16"	72 LB.
	7. P. R. E.	6 5/32"	8 27/32"	5 29/32"	6"	1'-11 3/32"	74 LB
	8. P. R. E.	6 15/16"	9 5/8"	6 11/16"	6 25/32"	1'-11 7/8"	76 LB.
	9. P. R. E.	7 3/4"	10 1/16"	7 1/2"	7 5/8"	2'-0 11/16"	78 LB.

THE ABOVE DIMENSIONS APPLY ALSO TO THE CORRESPONDING P. L. CHAIRS.

STANDARD RAILWAY EQUIPMENT — PERMANENT WAY.

REVISED P CHAIR FOR SWITCHES.

85R. B.S. RAIL.

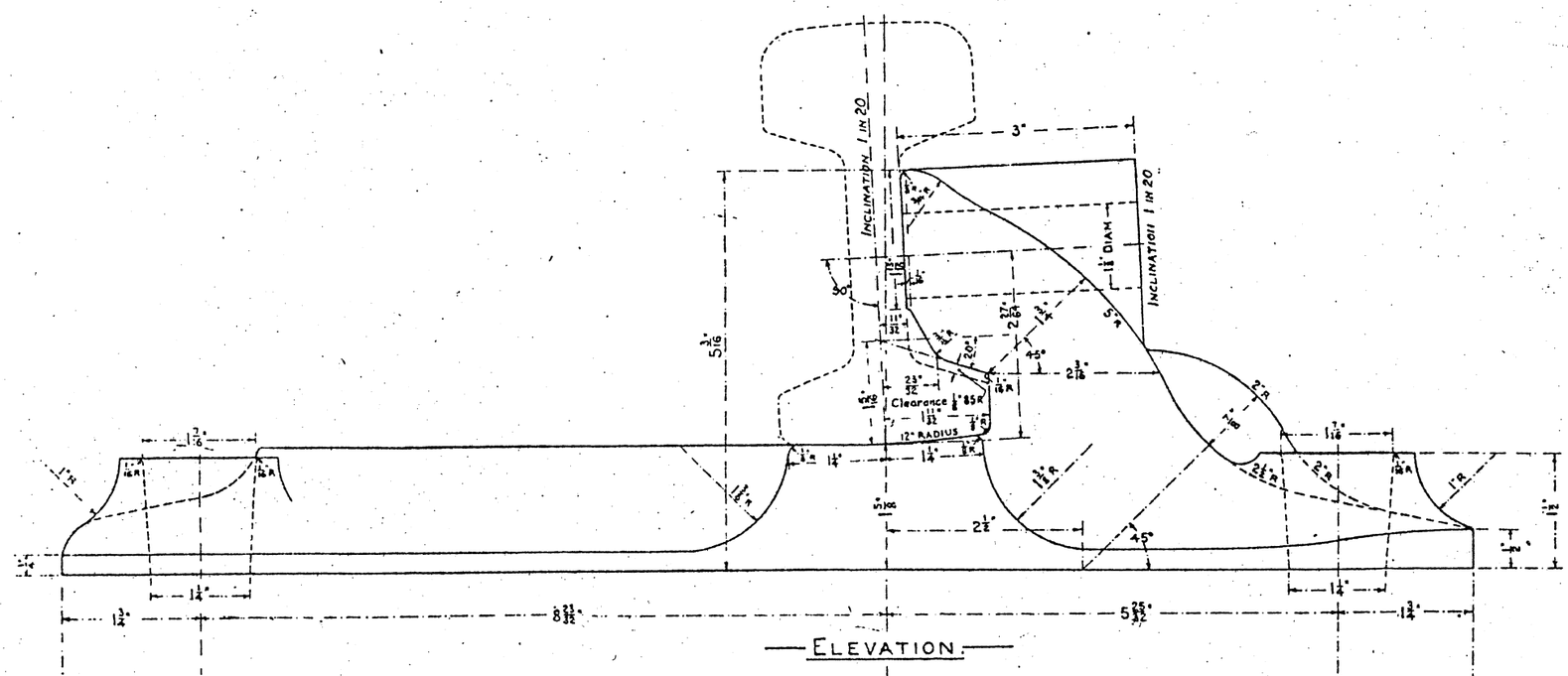

ELEVATION.

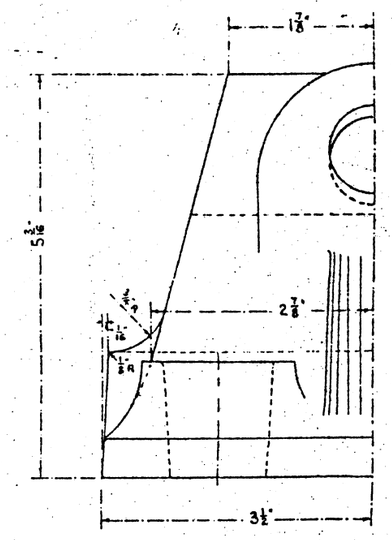

HALF END ELEVATION.

APPROX. WEIGHT 56-LB.

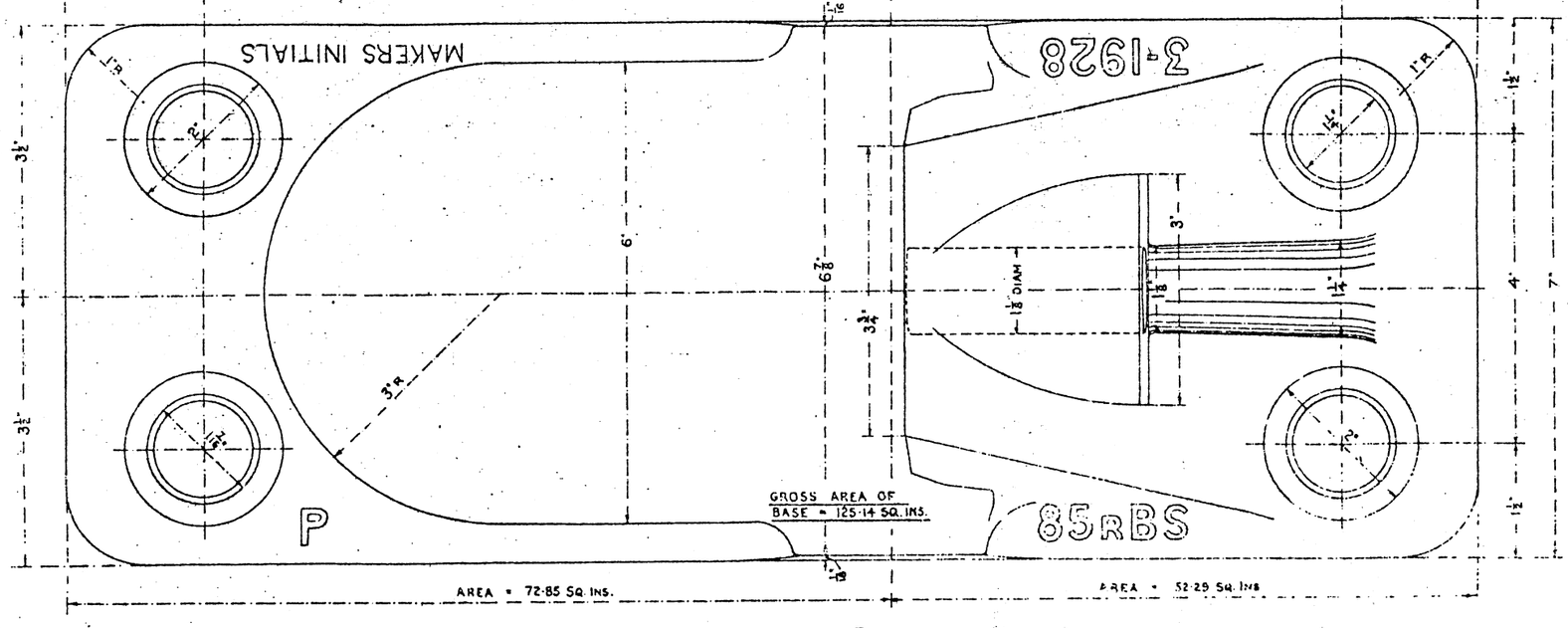

PLAN.

NOTE.

This drawing supersedes the design of P Chair shewn on Drawing No. 65, and this design of jaw to be used for all classes of "P" Chairs shewn on Drawing No. 93.

(Additional note in red see W.n A.7.5.51.)

HALF FULL SIZE.

STANDARD RAILWAY EQUIPMENT — PERMANENT WAY.

Nº 66.

DETAILS OF FITTINGS FOR SWITCHES.

85 R. B.S. RAIL.

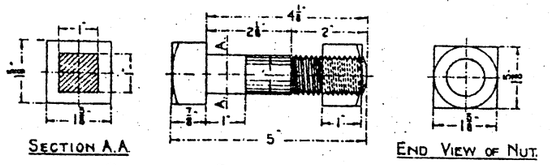

— DETAILS OF SWITCH ANCHOR BOLT —

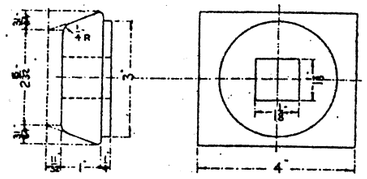

— C.I. WASHER —

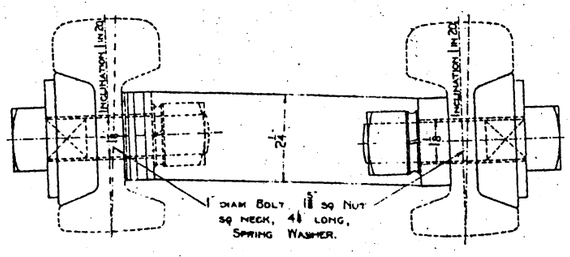

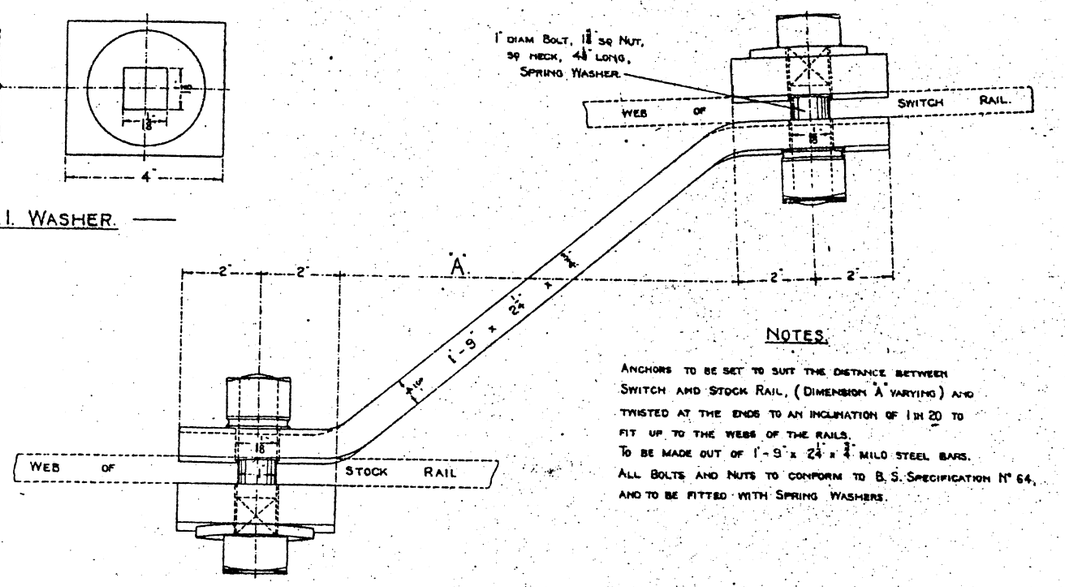

NOTES.

ANCHORS TO BE SET TO SUIT THE DISTANCE BETWEEN SWITCH AND STOCK RAIL, (DIMENSION "A" VARYING) AND TWISTED AT THE ENDS TO AN INCLINATION OF 1 IN 20 TO FIT UP TO THE WEBS OF THE RAILS.
TO BE MADE OUT OF 1'-9" x 2¼" x ¾" MILD STEEL BARS.
ALL BOLTS AND NUTS TO CONFORM TO B.S. SPECIFICATION Nº 64, AND TO BE FITTED WITH SPRING WASHERS.

— SWITCH ANCHOR. (FOR FACING POINTS.) —

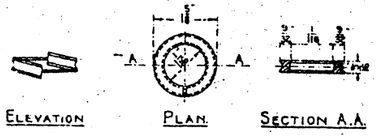

— DETAILS OF SPRING WASHER —
(FOR 1" DIAM BOLT)

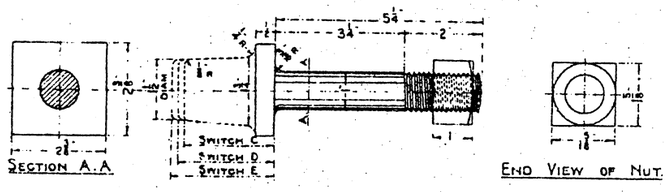

— DETAILS OF STOCK RAIL AND STUD BOLTS —

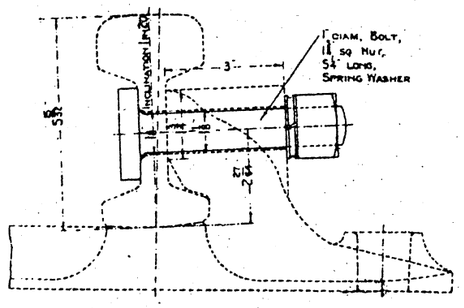

— STOCK RAIL BOLT —

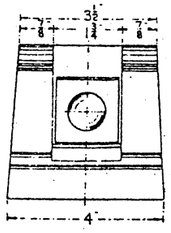

END ELEVATION

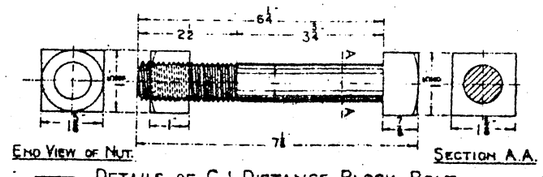

— DETAILS OF C.I DISTANCE BLOCK BOLT —

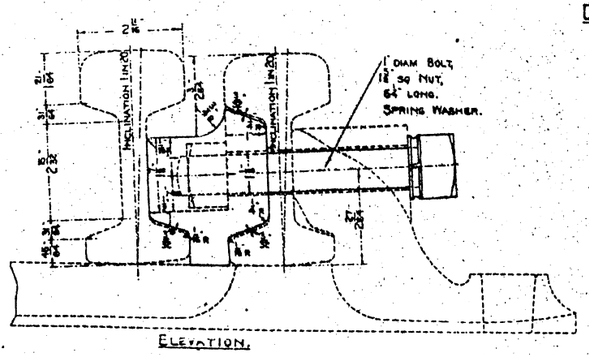

ELEVATION.

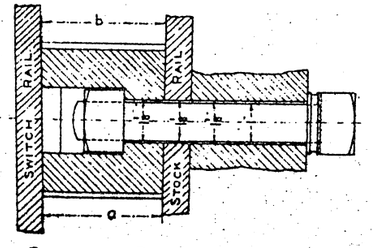

SECTIONAL PLAN

— QUARTER FULL SIZE —

— C.I. DISTANCE BLOCK —

DIMENSIONS OF C.I. DISTANCE BLOCK AND STUDS.

SWITCH.	BLOCK.	a.	b.
A	A. 1. R.	2 29/32"	3 1/16"
	A. 2. R.	4 1/4"	4 5/32"
B	B. 1. R	2 29/32"	3 1/32"
	B. 2. R.	3 15/16"	4 1/32"
C	STUD.	2 5/32"	
	C. 1. R.	3 1/16"	3 3/16"
	C. 2. R.	3 5/16"	4 1/16"
D	STUD	2 1/16"	
	D. 1. R.	3 1/16"	3 3/32"
	D. 2. R.	3 3/8"	3 29/32"
E	STUD.	2 19/32"	
	E. 1. R.	3 1/32"	3 3/32"
	E. 2. R.	3 7/8"	3 29/32"

THE ABOVE DIMENSIONS APPLY ALSO TO THE CORRESPONDING L DISTANCE BLOCKS AND STUDS.

STANDARD RAILWAY EQUIPMENT — PERMANENT WAY.

No. 67.

SWITCH STRETCHER BARS & SOLEPLATE.

FIRST BAR FOR UNDERCUT SWITCHES.

85 R. B.S. RAIL.

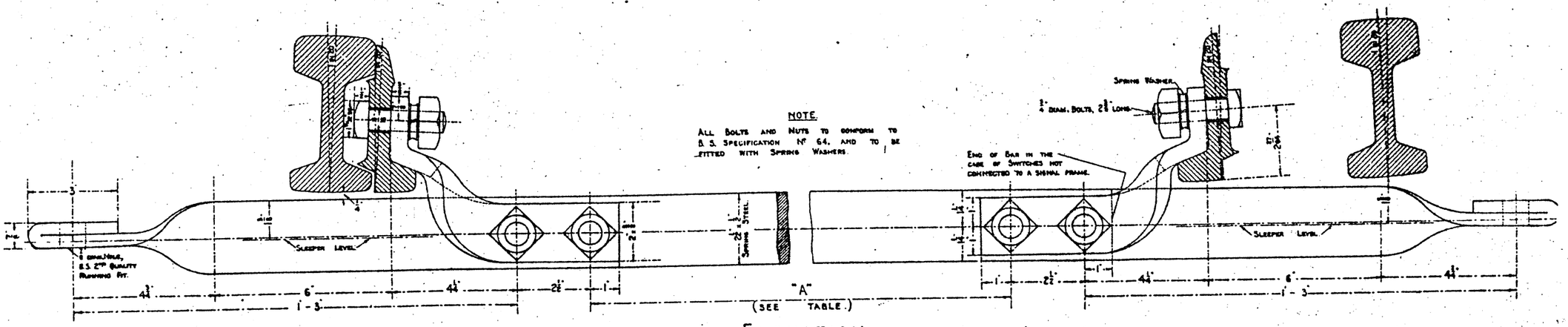

— ELEVATION. —

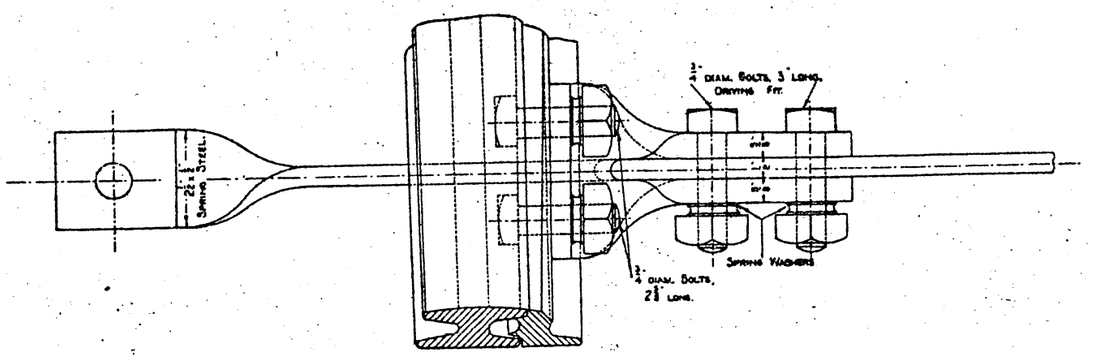

— PLAN. —

FIRST STRETCHER BAR FOR UNDERCUT SWITCHES.	
DIMENSION "A".	
	1ST. BAR.
A SWITCHES.	3' - 2 3/8"
B SWITCHES.	3' - 2 3/16"
C SWITCHES.	3' - 2 17/32"
D SWITCHES.	3' - 2 9/32"
E SWITCHES.	3' - 2 5/32"

— QUARTER FULL SIZE. —

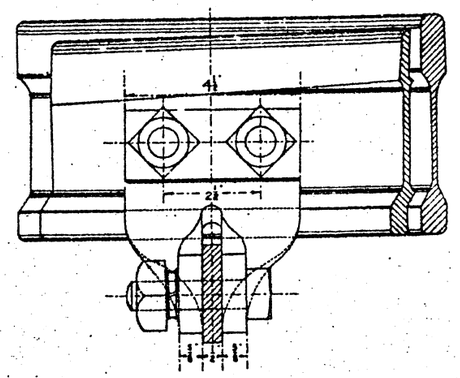

— END VIEW. —

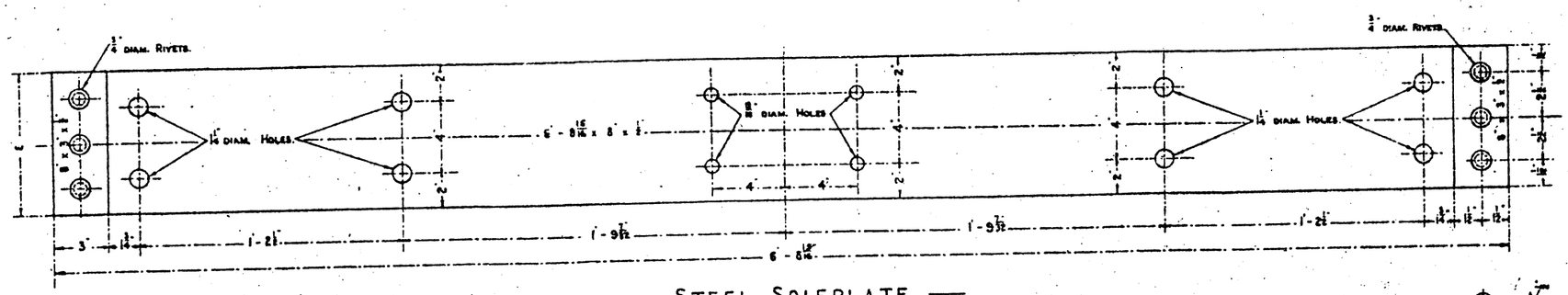

— STEEL SOLEPLATE. —

SCALE:- 1 1/2 INCHES = 1 FOOT.

STANDARD RAILWAY EQUIPMENT — PERMANENT WAY. No. 68.

SWITCH STRETCHER BARS & SOLEPLATE.

FIRST BAR FOR STRAIGHTCUT SWITCHES.

85 R. B.S. RAIL.

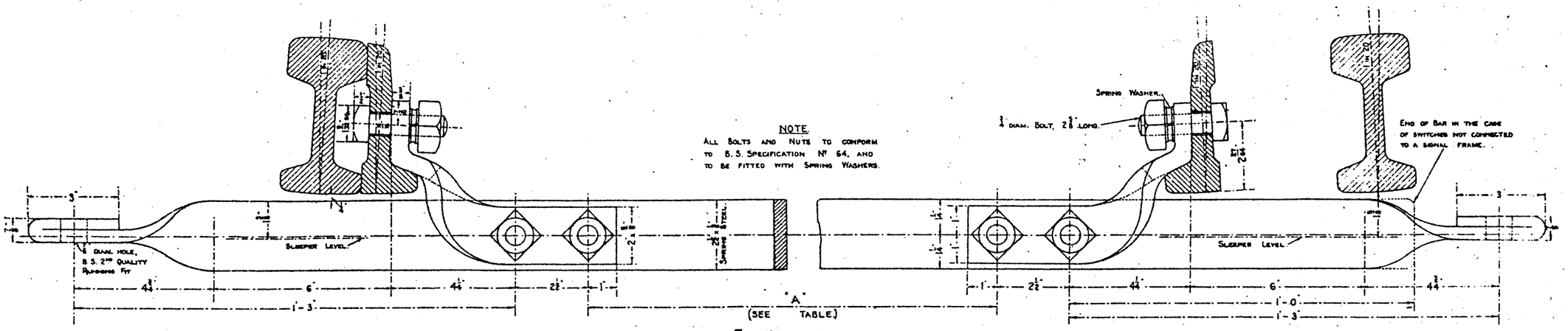

— ELEVATION. —

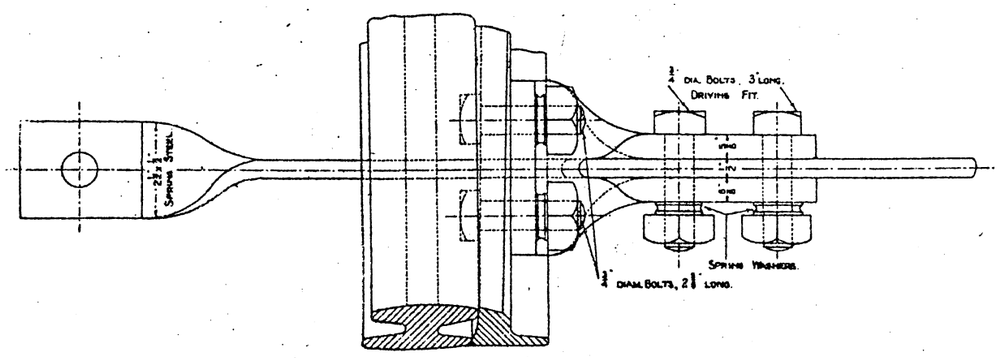

— PLAN. —

FIRST STRETCHER BAR FOR STRAIGHTCUT SWITCHES. DIMENSION "A".	
	1ST. BAR.
A SWITCHES.	3' – 2 11/16"
B SWITCHES.	3' – 2 9/16"
C SWITCHES	3' – 2 17/32"
D SWITCHES.	3' – 2 15/32"
E SWITCHES.	3' – 2 5/32"

— QUARTER FULL SIZE. —

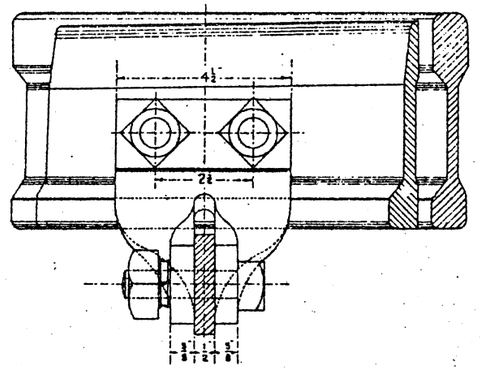

— END VIEW —

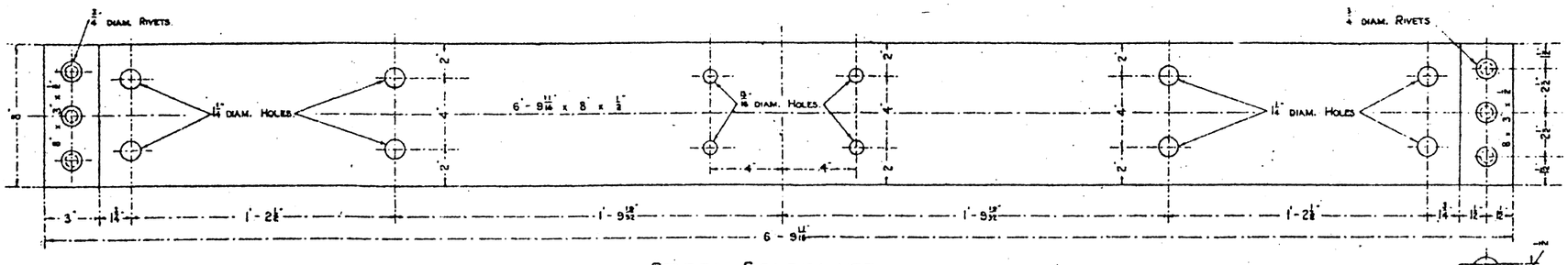

— STEEL SOLEPLATE. —

SCALE:- 1 1/2 INCHES = 1 FOOT.

STANDARD RAILWAY EQUIPMENT — PERMANENT WAY.

SECOND & THIRD SWITCH STRETCHER BARS FOR UNDERCUT & STRAICHTCUT SWITCHES.

85 R. B.S. RAIL.

ELEVATION OF 2ND AND 3RD STRETCHER BARS FOR STRAIGHTCUT SWITCHES.

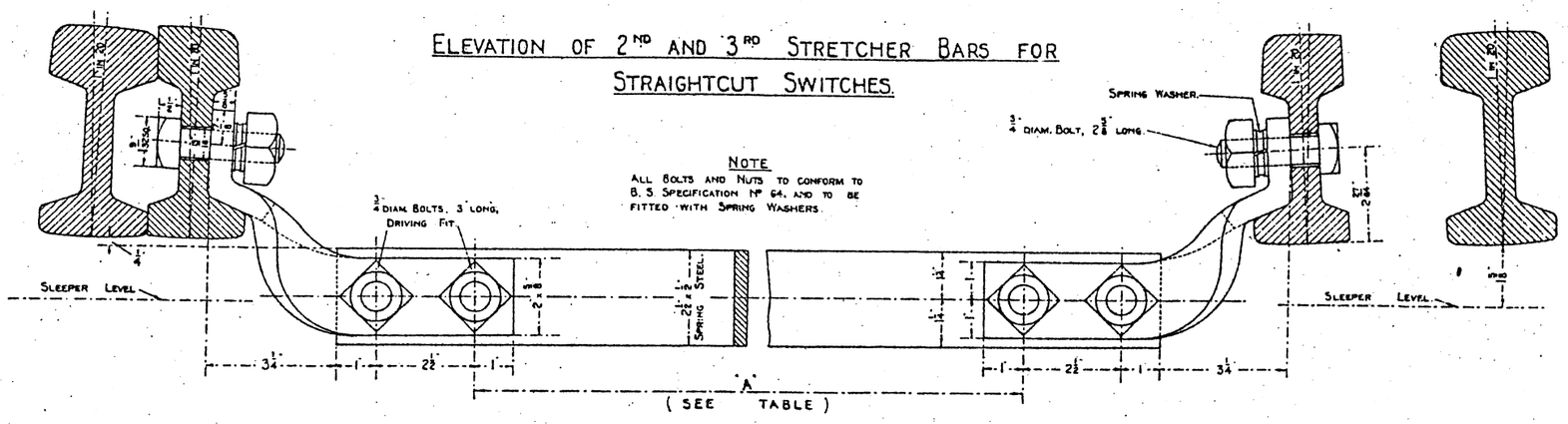

NOTE

ALL BOLTS AND NUTS TO CONFORM TO B.S. SPECIFICATION Nº 64, AND TO BE FITTED WITH SPRING WASHERS.

ELEVATION OF 2ND AND 3RD STRETCHER BARS FOR UNDERCUT SWITCHES.

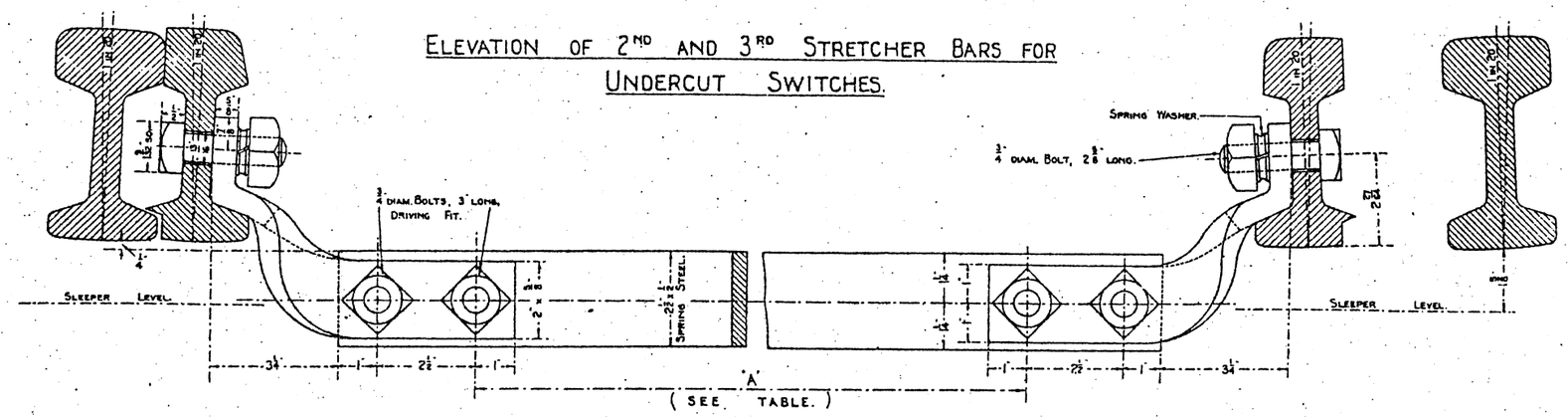

NOTE.

FOR FURTHER DETAILS OF BRACKETS & BOLTS, SEE DRAWING Nº 67.

STRETCHER BARS FOR UNDERCUT AND STRAIGHTCUT SWITCHES.		
DIMENSION "A".		
	2ND. BAR.	3RD. BAR
A SWITCHES.	3' - 3 3/16"	
B SWITCHES	3' - 3 1/2"	
C SWITCHES.	3' - 3 1/4"	
D SWITCHES.	3' - 3 3/32"	3' - 4 1/2"
E SWITCHES	3' - 2 7/8"	3' - 4 9/32"

— QUARTER FULL SIZE —

STANDARD RAILWAY EQUIPMENT — PERMANENT WAY.

Nº 70.

SWITCH STRETCHER BARS AND SOLEPLATE FOR 1 IN 8 DOUBLE SLIP ROADS.

FIRST BARS FOR UNDERCUT AND STRAICHTCUT SWITCHES.

85 R. B.S. RAIL.

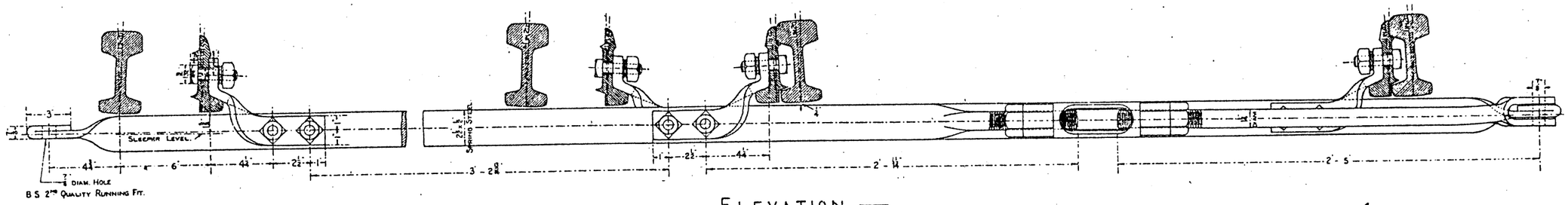

— Elevation. —

Scale:- 1½ Inches = 1 Foot.

All Bolts and Nuts to conform to B.S. Specification Nº 64, and to be fitted with Spring Washers.

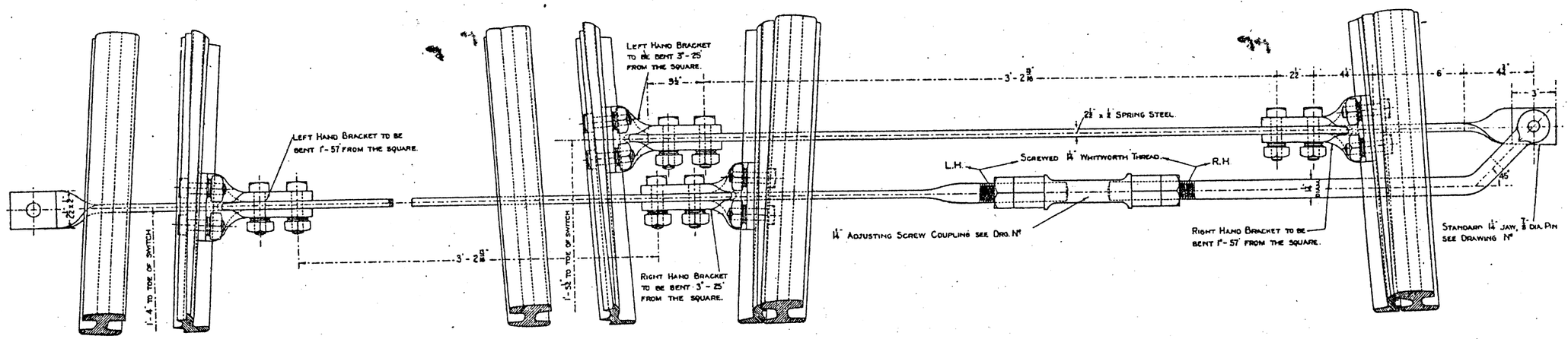

— Plan. —

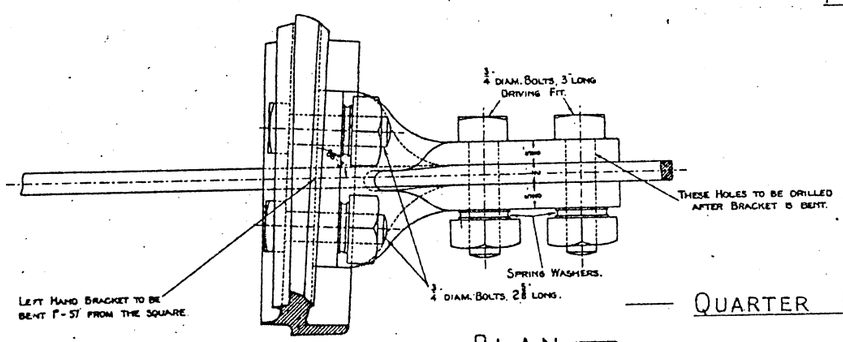

— Plan. —

— Quarter Full Size. —

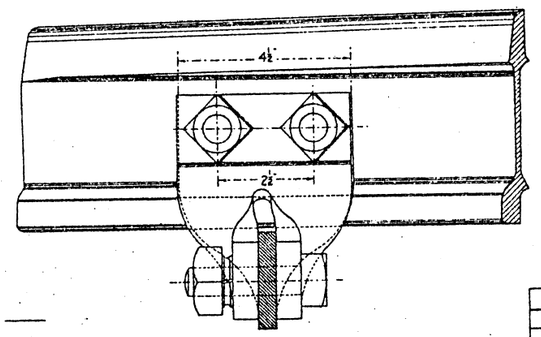

— End View. —

Steel Soleplate	
Dimension B = Undercut Switches	
Dimension C = Straightcut Switches.	

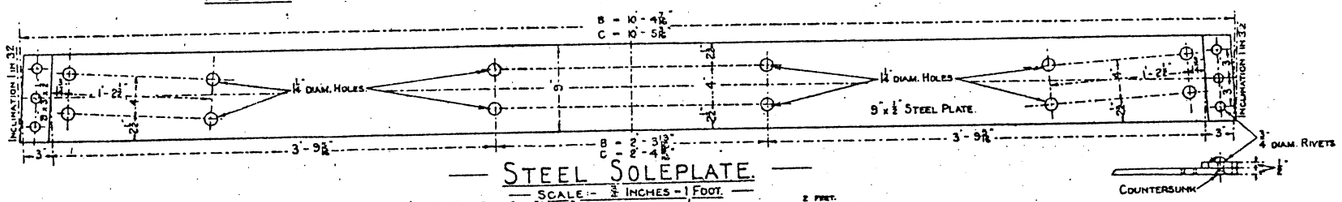

— Steel Soleplate. —

Scale:- ¾ Inches = 1 Foot.

STANDARD RAILWAY EQUIPMENT — PERMANENT WAY.

N° 71.

INSULATED SWITCH STRETCHER BAR & SOLEPLATE. FIRST BAR FOR UNDERCUT SWITCHES.

85 R. B.S. RAIL.

Dimension "A"	
A Switches.	3' - 2 $\frac{11}{16}$"
B Switches	3' - 2 $\frac{13}{16}$"
C Switches	3' - 2 $\frac{15}{16}$"
D Switches.	3' - 2 $\frac{17}{16}$"
E Switches	3' - 2 $\frac{19}{16}$"

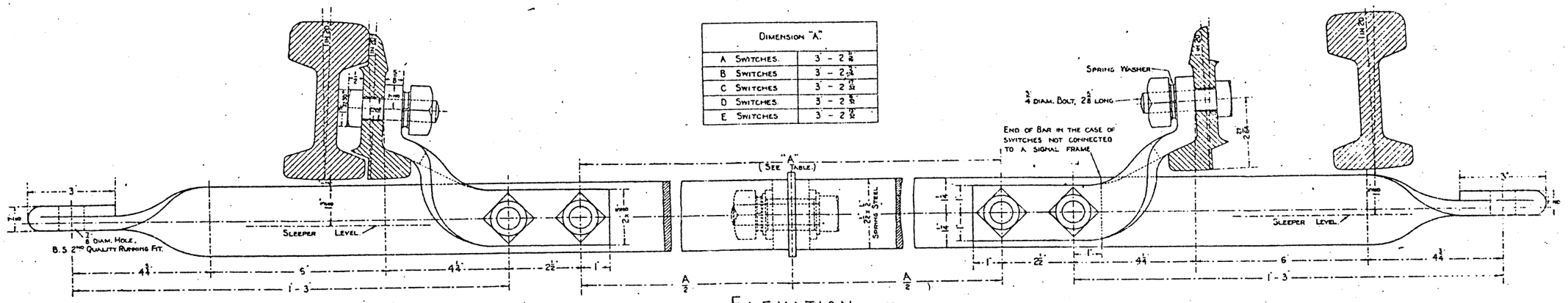

— Elevation —

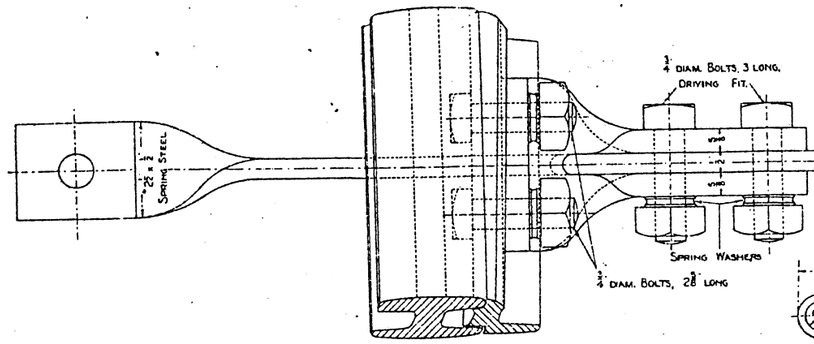

— Plan —

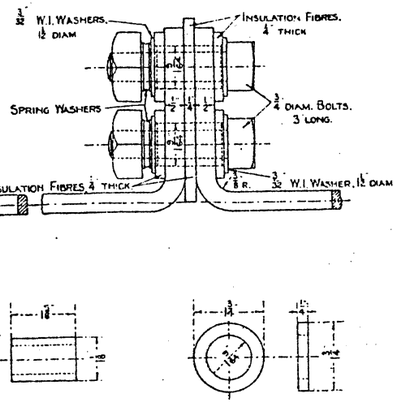

Insulation Fibres for Switch Stretcher Bar & Soleplate

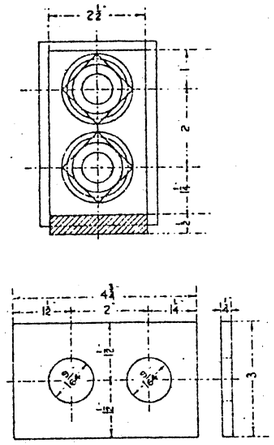

Insulation Fibre for Switch Stretcher Bar.

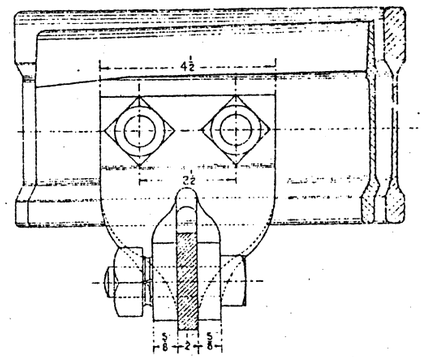

— End View —

All Bolts and Nuts to conform to B.S. Specification N° 64, and to be fitted with Spring Washers.

— Quarter Full Size —

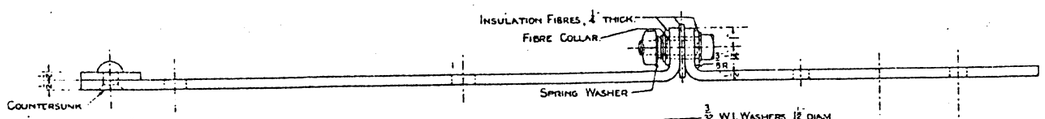

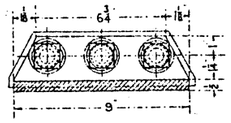

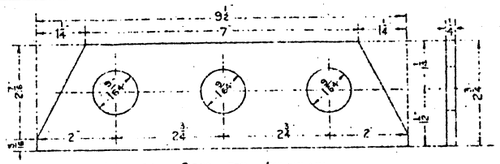

Insulation Fibre for Soleplate

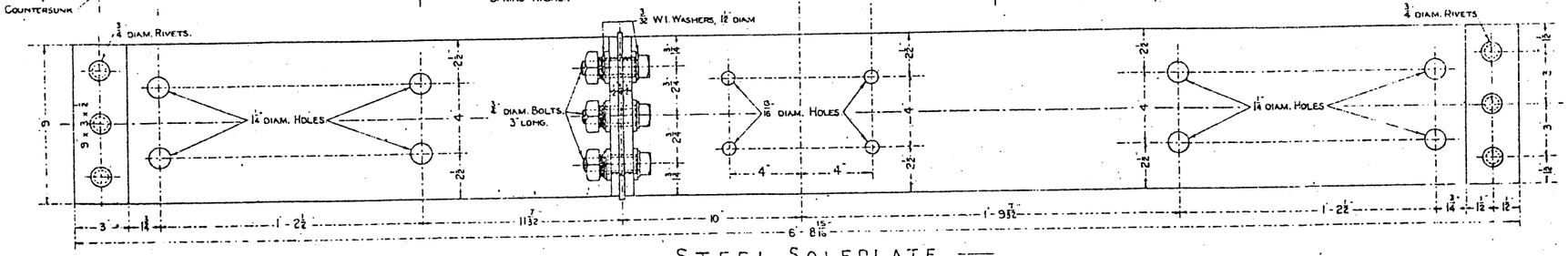

— Steel Soleplate —

Scale - 1$\frac{1}{2}$ Inches = 1 Foot.

Inches 12 9 6 3 0 1 2 3 4 5 6 7 8 9 10 11 12 1 Foot

STANDARD RAILWAY EQUIPMENT — PERMANENT WAY.

INSULATED SWITCH STRETCHER BAR & SOLEPLATE. FIRST BAR FOR STRAICHTCUT SWITCHES.

85 R. B.S. RAIL.

Dimension "A"	
A Switches.	3' – 2 11/16"
B Switches	3' – 2 3/4"
C Switches.	3' – 2 13/32"
D Switches.	3' – 2 3/8"
E Switches	3' – 2 5/16" !

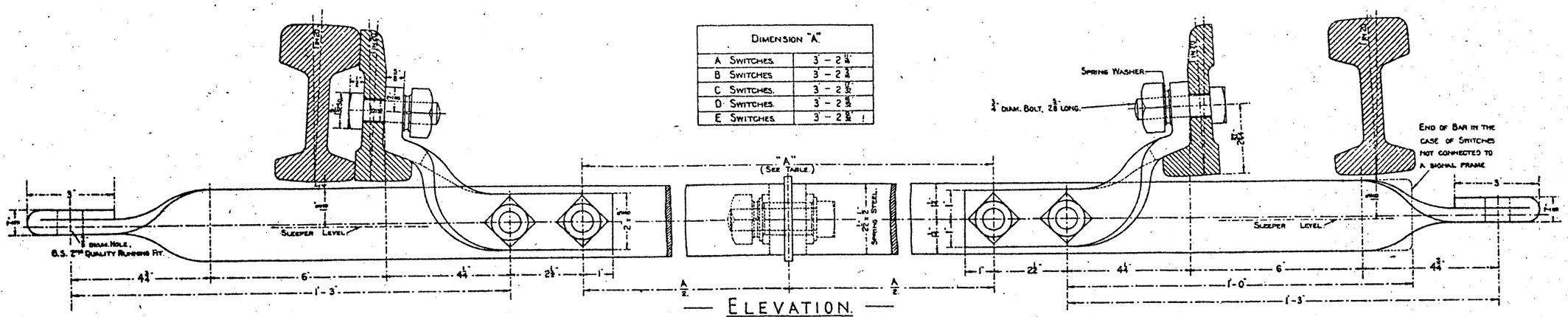

— Elevation. —

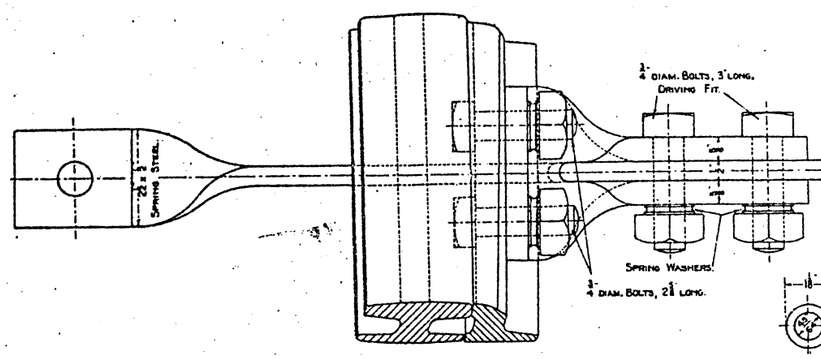

— Plan. —

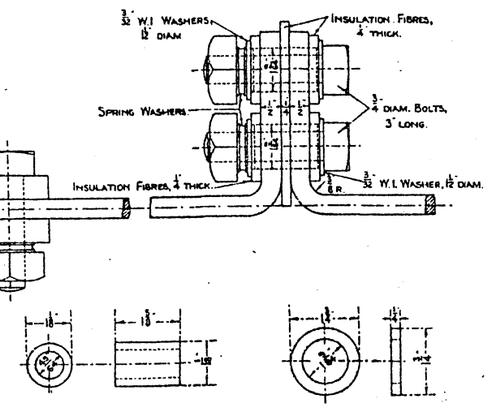

Insulation Fibres for Switch Stretcher Bar & Soleplate.

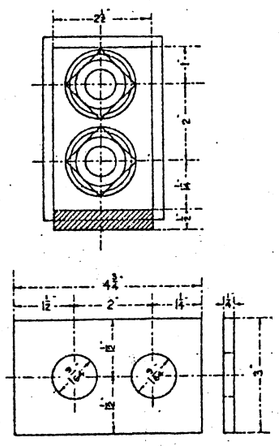

Insulation Fibre for Switch Stretcher Bar.

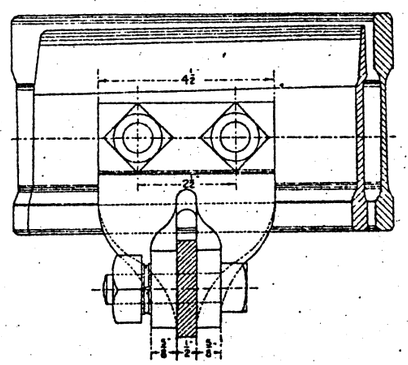

— End View. —

— Quarter Full Size. —

All Bolts and Nuts to conform to B.S. Specification No. 64, and to be fitted with Spring Washers.

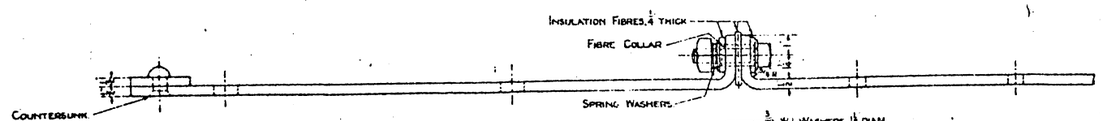

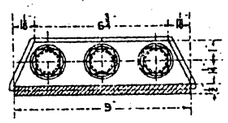

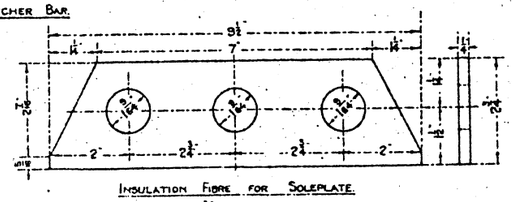

Insulation Fibre for Soleplate.

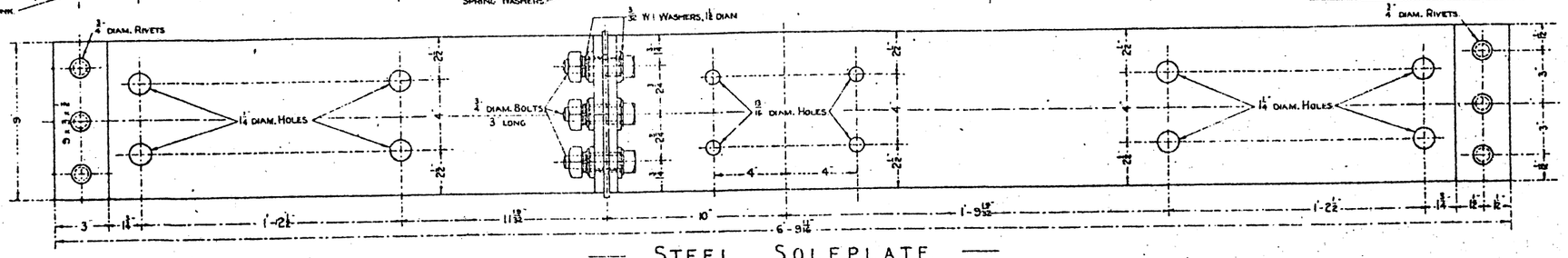

— Steel Soleplate. —

Scale:- 1 1/2 inches = 1 foot.

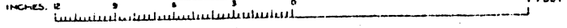

STANDARD RAILWAY EQUIPMENT — PERMANENT WAY.

Nº 73.

INSULATED SECOND & THIRD SWITCH STRETCHER BARS FOR UNDERCUT & STRAICHTCUT SWITCHES.

85 R. B.S. RAIL.

ELEVATION OF INSULATED 2ND & 3RD SWITCH STRETCHER BARS FOR STRAIGHTCUT SWITCHES.

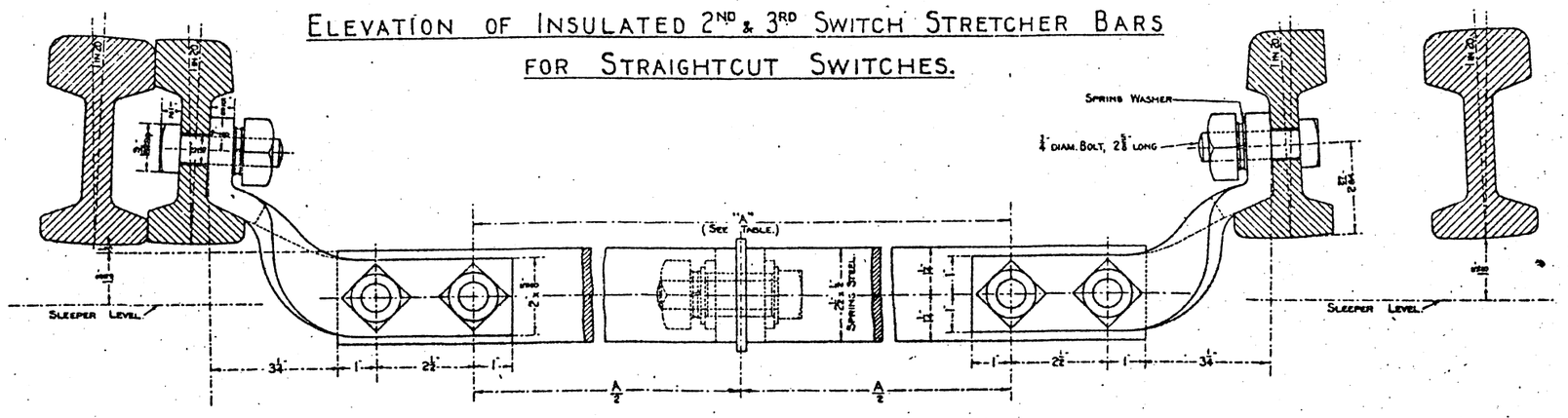

ELEVATION OF INSULATED 2ND & 3RD SWITCH STRETCHER BARS FOR UNDERCUT SWITCHES.

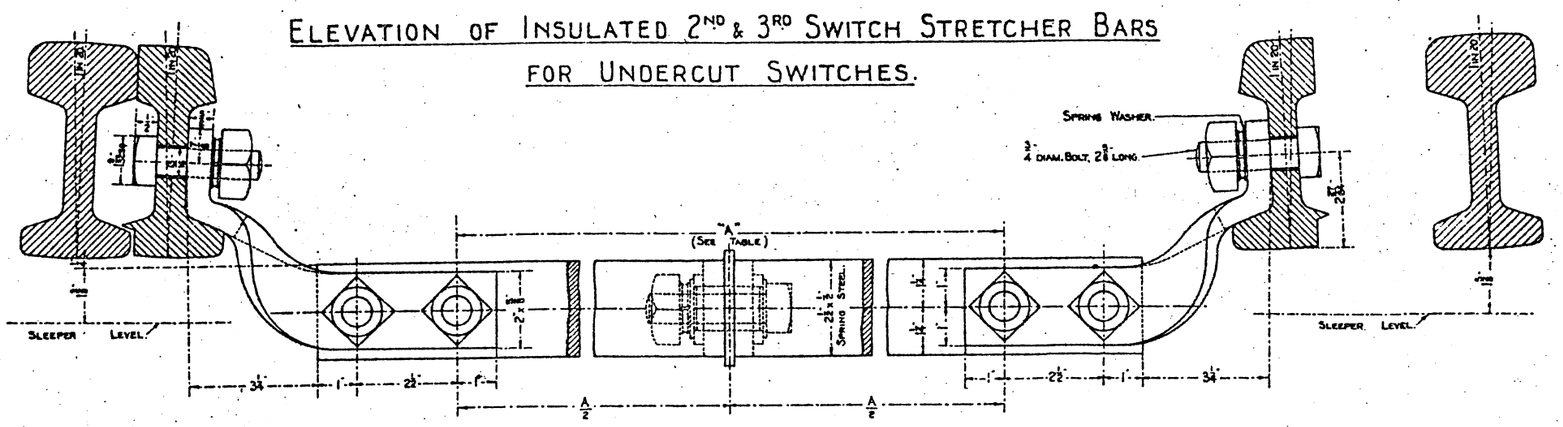

ALL BOLTS AND NUTS TO CONFORM TO B.S. SPECIFICATION Nº 64, AND TO BE FITTED WITH SPRING WASHERS.

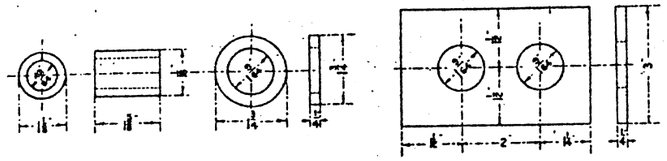

— INSULATION FIBRES. —

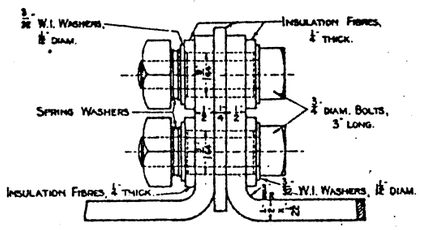

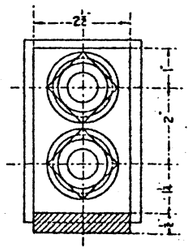

— DETAILS OF INSULATED JOINT. —

DIMENSION "A".	2ND BAR.	3RD BAR.
A SWITCHES.	3' - 3 3/8"	
B SWITCHES.	3' - 3½"	
C SWITCHES.	3' - 3¼"	
D SWITCHES.	3' - 3 5/8"	3' - 4½"
E SWITCHES.	3' - 2 7/8"	3' - 4 3/8"

— QUARTER FULL SIZE. —

STANDARD RAILWAY EQUIPMENT — PERMANENT WAY. Nº 74.

INSULATED SWITCH STRETCHER BARS AND SOLEPLATE FOR 1 IN 8 DOUBLE SLIP ROADS.

FIRST BARS FOR UNDERCUT AND STRAICHTCUT SWITCHES.

85 R. B.S. RAIL.

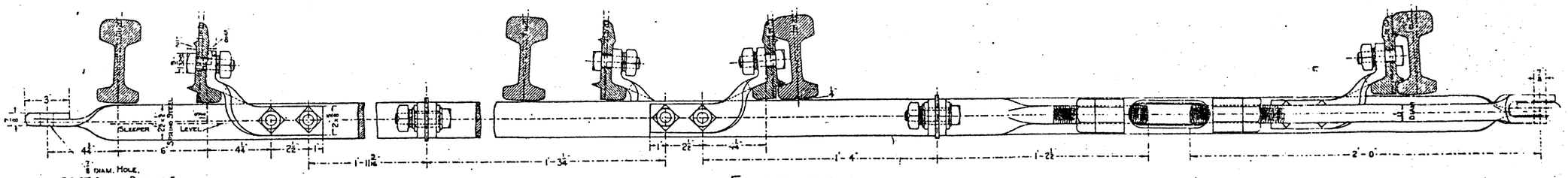

— ELEVATION. —

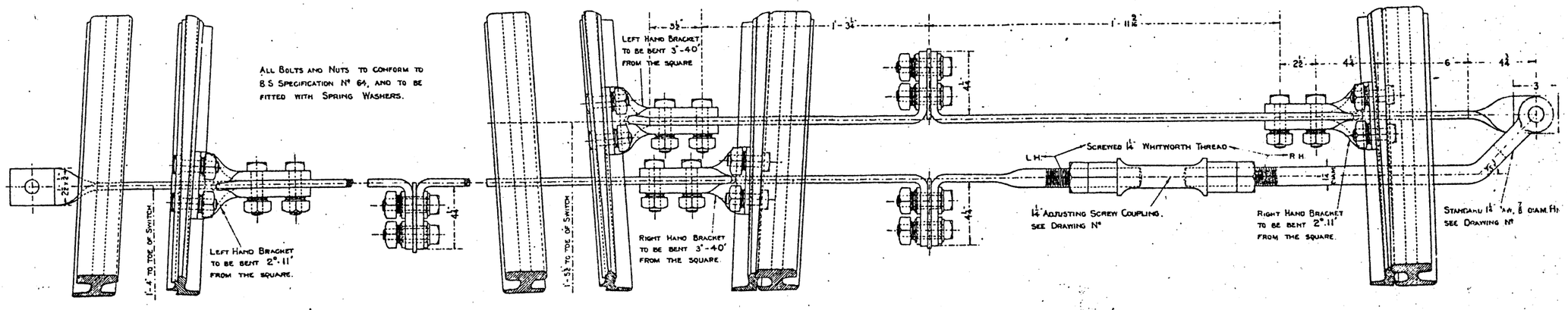

— PLAN. —

— SCALE:- 1½ INCHES - 1 FOOT. —

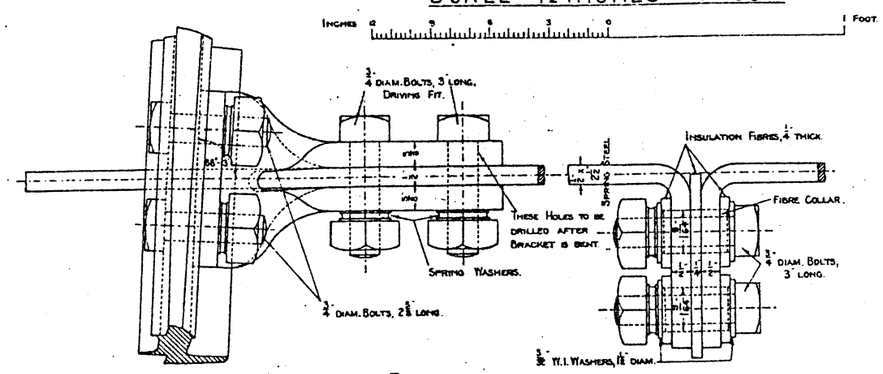

— PLAN. —

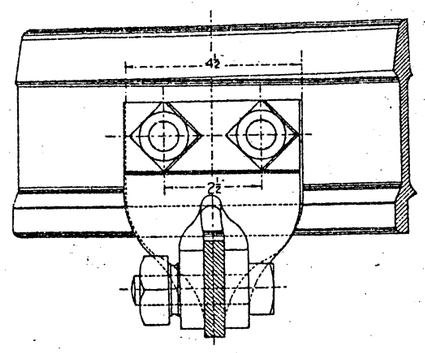

— END VIEW. —

QUARTER FULL SIZE.

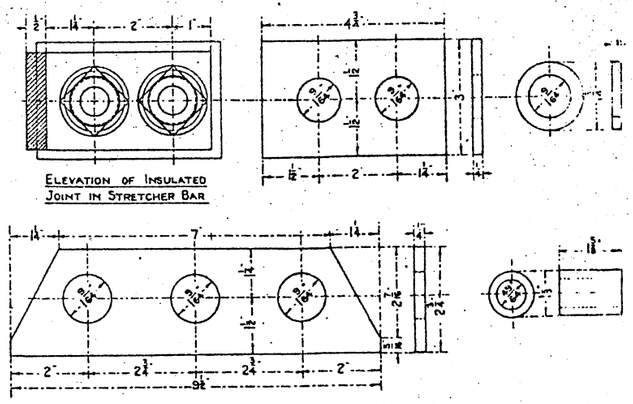

ELEVATION OF INSULATED JOINT IN STRETCHER BAR

INSULATION FIBRES FOR STRETCHER BAR & SOLEPLATE

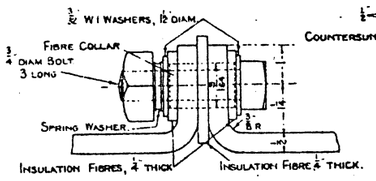

INSULATED JOINT IN STEEL SOLEPLATE

QUARTER FULL SIZE —

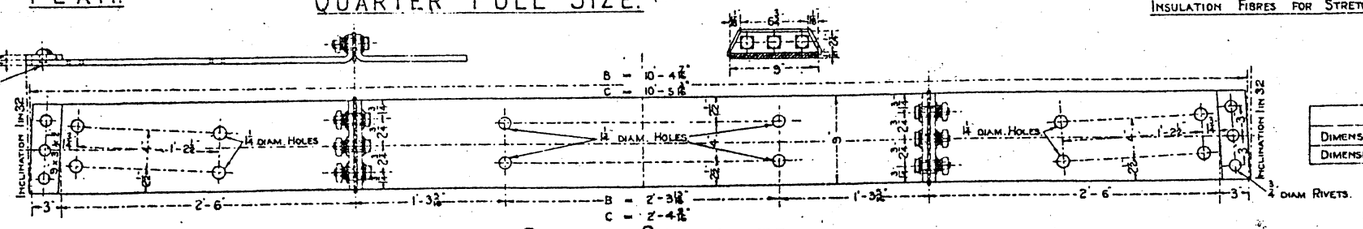

STEEL SOLEPLATE	
DIMENSION B =	UNDERCUT SWITCHES
DIMENSION C =	STRAIGHTCUT SWITCHES

— STEEL SOLEPLATE. —

SCALE:- ¾ INCHES = 1 FOOT

INCHES 12 9 6 3 0 2 FEET.

STANDARD RAILWAY EQUIPMENT — PERMANENT WAY. Nº 75A

COMMON AND OBTUSE ANGLE CROSSINGS 1 IN 1½ TO 1 IN 3½.

85R. B.S. RAIL.

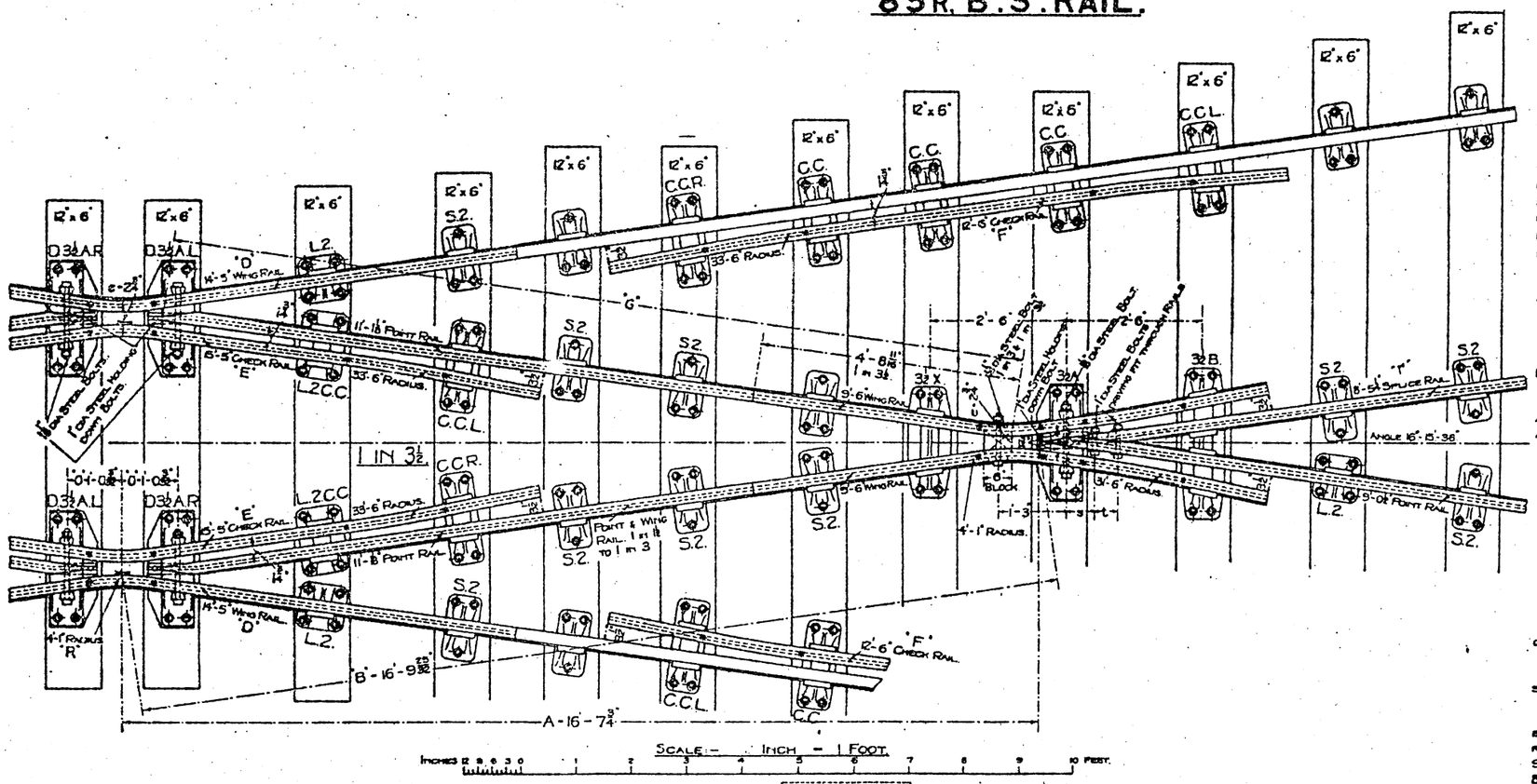

NOTES.

The length of the Point Rails shewn apply to straight roads only. In the case of curved intersections the lengths of these Rails will require to be varied.

The Point Rail of the obtuse angle crossing to be vertical from the nose to the set. From the latter point the Rail is to be gradually canted towards the running side until the full inclination of 1 in 20 from the vertical is reached at a distance of two feet six inches back from the nose.

The Point and Splice Rails of the common crossing to be vertical from the nose to the heel of the splice. From the latter point each Rail is to be gradually canted towards the running side until the full inclination of 1 in 20 from the vertical is reached at a distance of two feet six inches back from the nose, in the case of the 1 in 1½ and 1 in 2 and five feet in the case of the 1 in 2½ to 1 in 3½

The Wing Rails to be canted towards the running side at an inclination of 1 in 20 from the vertical.

The Check Rails to be vertical.

All Bolts and Nuts to conform to the B.S. Specification Nº 64 and to be fitted with Spring Washers

The following Details applicable to all common crossings appear on Drawing Nº 79 and similar Details for the obtuse angle crossings appear on Drawing Nº 90

"Crossing nose before and after milling"
"Holding-down Bolt, Saddle and Washer Plate."
"C.I. Washers, also chair screw for built up 'A' chair fastenings."

For Details of common crossing chairs see Drawing Nº 83A
For Details of obtuse angle crossing chairs see Drawing Nº 83A
For Details of C.C., C.C.R. and C.C.L., chairs see Drawing Nº 85
For Details of L.2. chair see Drawing Nº 53.
For Details of L.2.C.C. chair see Drawing Nº 83A
For Details of S.2. chair see Drawing Nº 52.

The angle of crossing in figures to be stamped on the outside of the web of the Point, Splice and Wing Rails, 2'-4" from fishpoint end.

The Table below gives the varying dimensions of Rails, Splice set, etc, required for the manufacture of the crossings

The Plan shews the arrangement of timbering and chairing, etc, of the 1 in 3½. For similar Details for the 1 in 1½ to 1 in 3 reference should be made to the corresponding crossings of 95R B.S. Rail (Drawings Nºs 28B to E); chairs to take the 85R. B.S. Rail being substituted

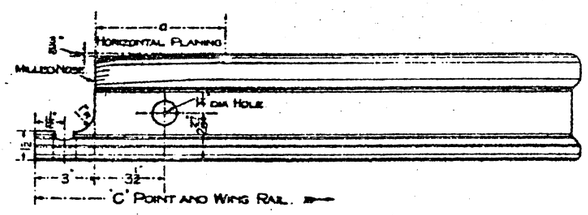

Elevation.

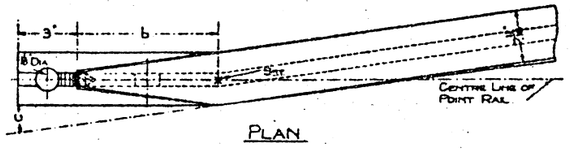

Plan

— Details of Point Rail. —

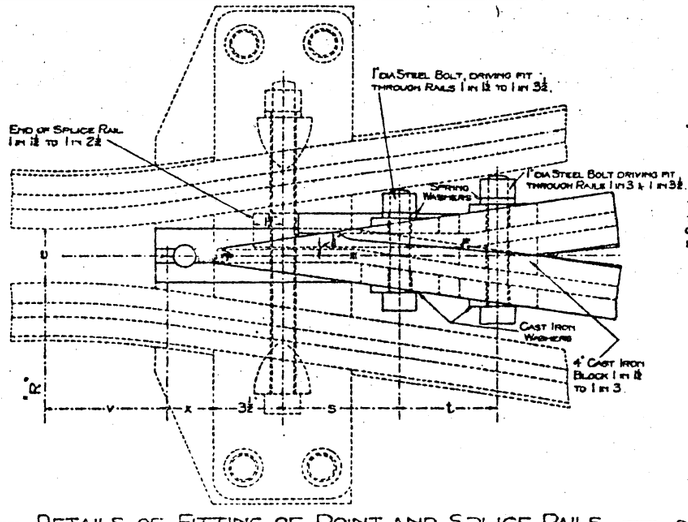

— Details of Fitting of Point and Splice Rails —

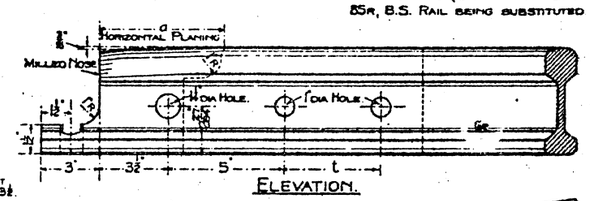

Elevation.

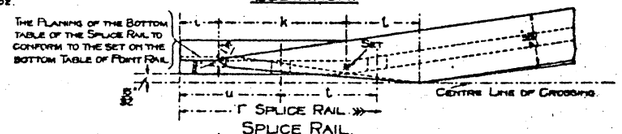

Splice Rail.

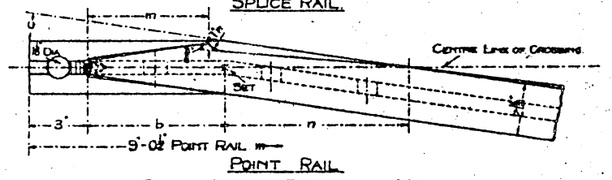

Point Rail.

— Details of Crossing Nose. —

— Dimensions of Rails, Splice, Bending etc. 1 in 1½ to 1 in 3½.

Angle of Crossing	c	b	c	c	l	k	t	m	n	r	s	t	u	v	x	"R"	"A"	"B"	"C"	"D"	"E"	"F"	"O"	"G"
1 in 1½	2⅛	3 3/32	2¼	3¼	0 3/32	2 3/8	1⅛	2⅛	4¼	8'-7½	5¼"	–	7¼	2 5/64	1½	1'-0"	7'-5 3/32	7'-10⅜	12'-2"	14'-5"	9'-4"	10'-6"	7 5/64	7'-3 3/32
1 in 2	3¼	4 5/64	1 5/64	2 3/32	1⅛	3 5/64	2 5/64	3⅛	5 3/32	8'-7½	5¼"	–	7¼	3 3/64	1⅛	1'-6"	9'-8½	10'-0½	14'-3"	14'-5"	14'-5"	10'-6"	8 5/64	9'-3½
1 in 2½	4⅛	5 5/64	1⅛	2¼	2 3/32	4 5/64	2 5/64	4 3/32	6 3/32	8'-7½	7½	–	9"	4 3/32	1½	2'-0"	2'-10 5/64	12'-2 3/32	16'-2"	14'-5"	14'-5"	12'-6"	9 3/32	11'-4½
1 in 3	5⅜	6 5/64	1 3/32	2¼	3 3/32	5 5/64	3 3/64	5 5/64	6 5/64	8'-5¼	6"	5"	5¼	5 5/64	2⅛	2'-11"	14'-3 3/32	14'-6 5/32	18'-5"	13'-6"	14'-5"	13'-0"	10 5/64	13'-5¼
1 in 3½	6⅜	7 3/32	1⅜	2¼	2 3/32	6 5/64	3 3/32	6 3/32	9 3/32	8'-5¼	6"	5"	5¼	6 5/64	2⅛	4'-1"	16'-7½	16'-9 3/32	–	14'-5"	15'-5"	12'-6"	11'-0 5/32	–

For amended dimensions see Mr Walkers letter dated 1st Aug. 1926

Scale:- 1½ Inches - 1 Foot.

Inches 12 11 10 9 8 7 6 5 4 3 2 1 0 — 1 Foot

STANDARD RAILWAY EQUIPMENT — PERMANENT WAY.

COMMON CROSSINGS 1 IN 4 & 1 IN 4½.

85 R. B.S. RAIL.

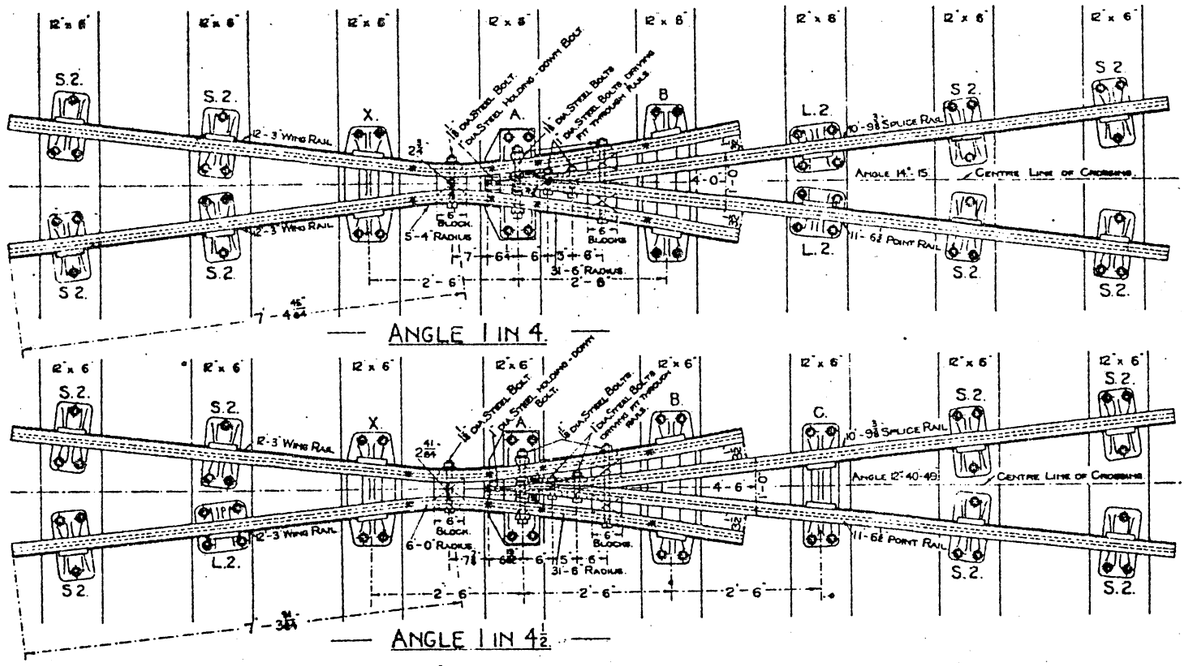

SCALE:- ⅜ INCH — 1 FOOT.

NOTES.

The Point and Splice Rails to be vertical from the nose of the Point Rail to the heel of the Splice. From the latter point each Rail to be gradually canted towards the running side until the full inclination of 1 in 20 from the vertical is reached at a distance of five feet back from the nose in the case of the 1 in 4 and seven feet six inches in the case of the 1 in 4½.

The Wing Rails to be canted towards the running side at an inclination of 1 in 20 from the vertical.

The Check Rails to be vertical.

All Bolts and Nuts to conform to the British Standard Specification Nº 64 and to be fitted with Spring Washers.

15'-0" Check Rails to be used with these crossings, for Details see Drawing Nº 79 (1 in 8 common crossing.)

The following Details applicable to all common crossings appear on Drawing Nº 79

"Crossing Nose before and after milling, and fitting of Splice."
"Holding-down Bolt, Saddle and Washer Plate."
"C.I. Washers, also Chair Screw for built-up "A" Chair fastenings."

For Details of common crossing Chairs, see Drawing Nºs 83, 84, 85.

For Details of the S.2. Chair, see Drawing Nº 52.

For Details of the L.2. Chair, see Drawing Nº 53.

The angle of crossing in 1" figures to be stamped on the outside of the web of the Point, Splice and Wing Rails, 2'-4" from fishjoint end.

Dimensions referring to Cross Sections.

Angle of Crossing	c	f	q
1 in 4	2 4/4"	5 63/64"	3 1/8"
1 in 4½	2 41/64"	5 1/4"	2 63/64"

Dimensions referring to Details of Crossing Nose.

Angle of Crossing	a	b	c	i	k	l	m	n	o	r
1 in 4	7 1/2"	8 5/64"	1 1/8"	1 1/8"	7 21/64"	4 21/64"	7 1/4"	10 53/64"	3 3/8"	10'-9 3/8"
1 in 4½	8 1/16"	9 7/64"	1 11/32"	2 1/32"	8 15/64"	4 55/64"	8 5/32"	12 11/64"	3 3/8"	10'-9 3/8"

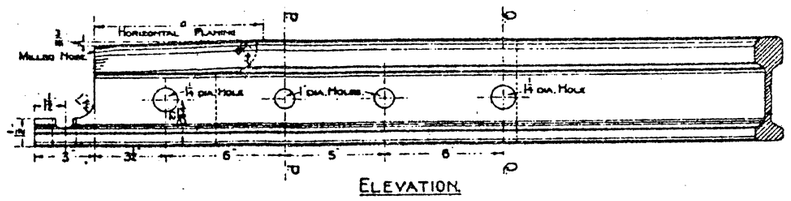

ELEVATION.

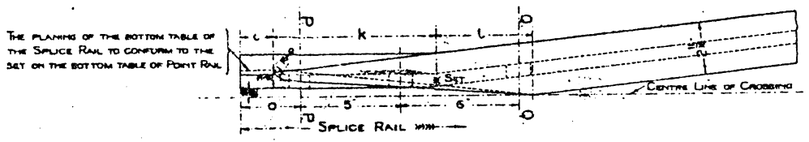

SPLICE RAIL

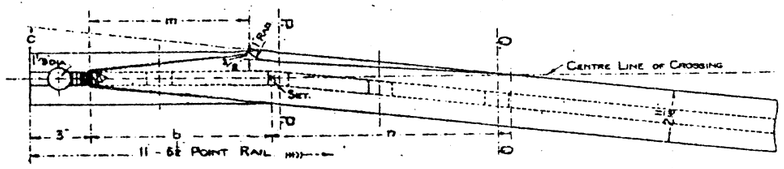

POINT RAIL.

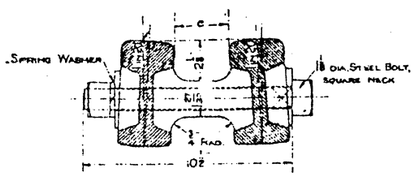

SECTION THROUGH NECK BOLT.

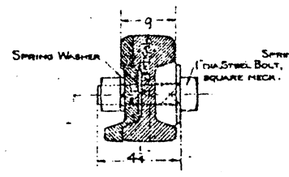

SECTION P.P.

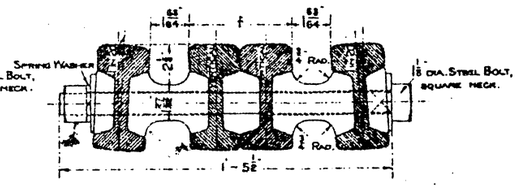

SECTION Q.Q.

DETAILS OF CROSSING NOSE

SCALE:- 1½ INCHES — 1 FOOT.

STANDARD RAILWAY EQUIPMENT — PERMANENT WAY.

COMMON CROSSINGS 1 IN 5 & 1 IN 5½.

85 R. B.S. RAIL.

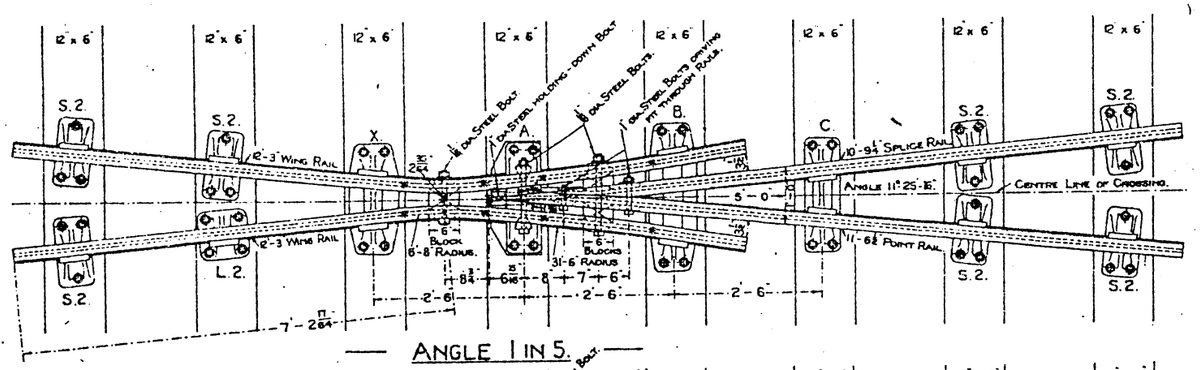

— Angle 1 in 5. —

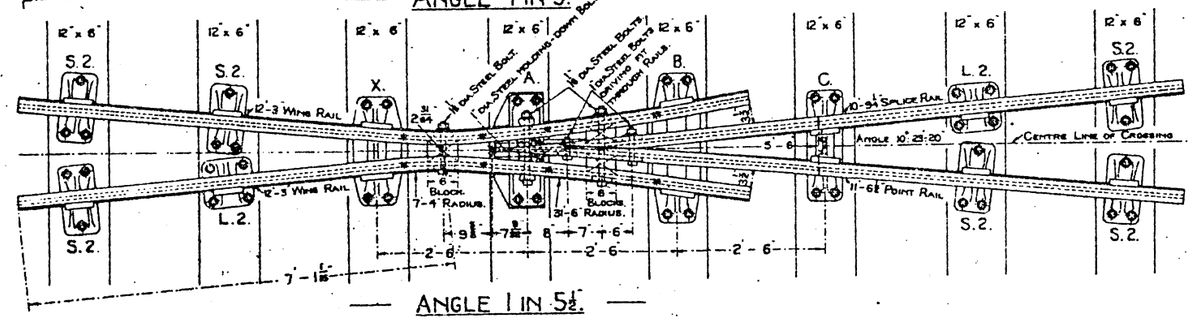

— Angle 1 in 5½. —

Scale:— ⅜ Inch = 1 Foot.

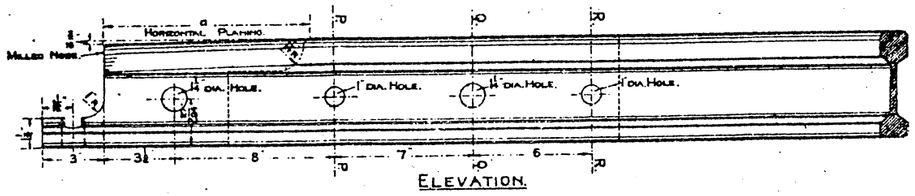

Elevation.

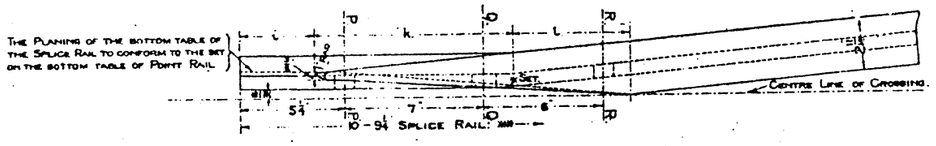

Splice Rail.

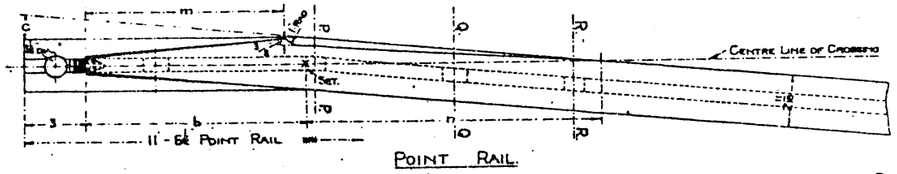

Point Rail.

— Details of Crossing Nose. —

Scale — 1½ Inches = 1 Foot.

Notes.

The Point and Splice Rails to be vertical from the nose of the Point Rail to the heel of the Splice. From the latter point each Rail to be gradually canted towards the running side until the full inclination of 1 in 20 from the vertical is reached at a distance of seven feet six inches back from the nose.

The Wing Rails to be canted towards the running side at an inclination of 1 in 20 from the vertical.

The Check Rails to be vertical.

All Bolts and Nuts to conform to the British Standard Specification Nº 64 and to be fitted with Spring Washers.

8'-0" Check Rails to be used with these crossings, for Details see Drawing Nº 79 (1 in 8 common crossing.)

The following Details applicable to all common crossings appear on Drawing Nº 79.

"Crossing Nose before and after milling, and fitting of Splice."
"Holding-down Bolt, Saddle and Washer Plate."
"C.I. Washers, also Chair Screw for built-up "A" Chair fastenings."

For Details of common crossing Chairs, see Drawing Nºs 83, 84, 85.

For Details of the S.2. Chair, see Drawing Nº 52.

For Details of the L.2. Chair, see Drawing Nº 53.

The angle of crossing in 1" figures to be stamped on the outside of the web of the Point, Splice and Wing Rails, 2'-4" from fishjoint end.

Dimensions referring to Cross Sections.

Angle of Crossing	e	f	g	h
1 in 5	2 35/64"	4 25/64"	2 63/64"	5 19/32"
1 in 5½	2 31/64"	4 3/64"	2 25/32"	5 9/64"

Dimensions referring to Details of Crossing Nose.

Angle of Crossing	a	b	c	i	k	l	m	n
1 in 5	9 3/8"	10 1/16"	1 5/16"	2 13/16"	9 3/8"	5 3/8"	9 1/16"	1'-1"
1 in 5½	10 5/16"	11 1/16"	1 9/32"	3 27/32"	10 1/32"	5 29/32"	9 31/32"	1'-2 27/32"

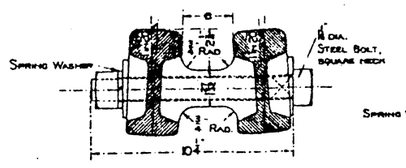

Section through Neck Bolt.

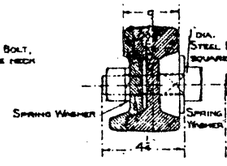

Section P.P.

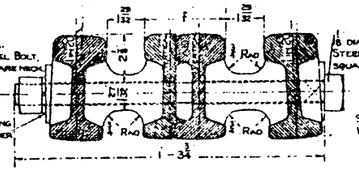

Section Q.Q.

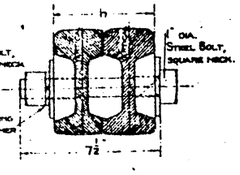

Section R.R.

STANDARD RAILWAY EQUIPMENT — PERMANENT WAY. Nº 77.

COMMON CROSSINGS 1 IN 6 & 1 IN 6½.

85 R. B.S. RAIL.

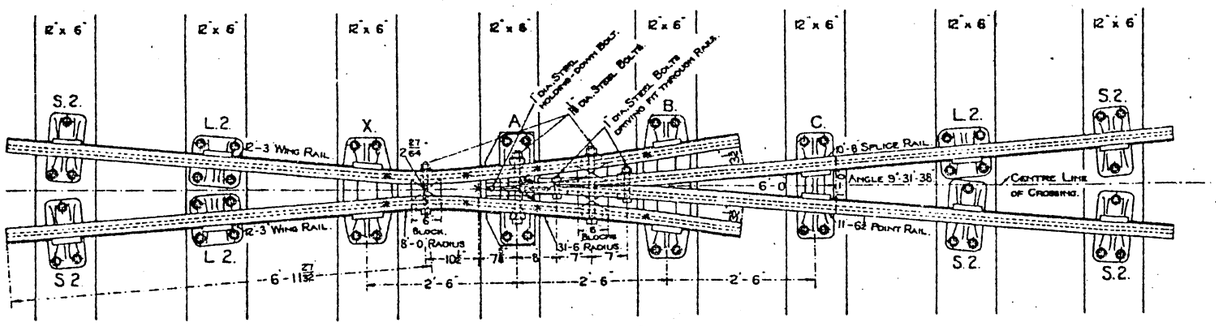

— ANGLE 1 IN 6. —

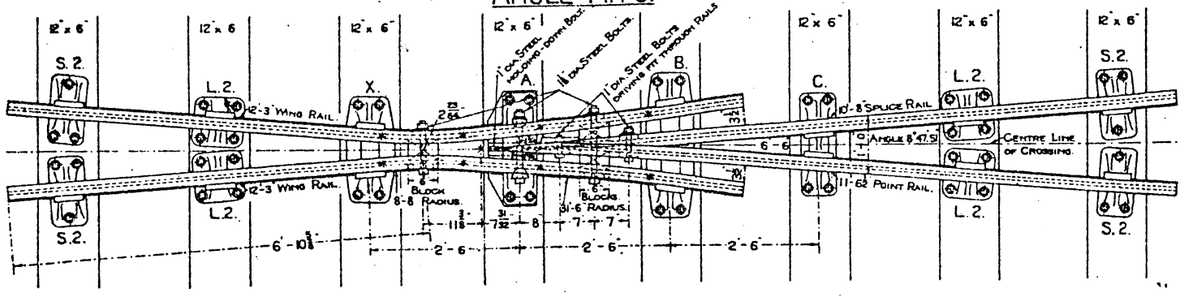

— ANGLE 1 IN 6½. —

SCALE:— ⅜ INCH — 1 FOOT.

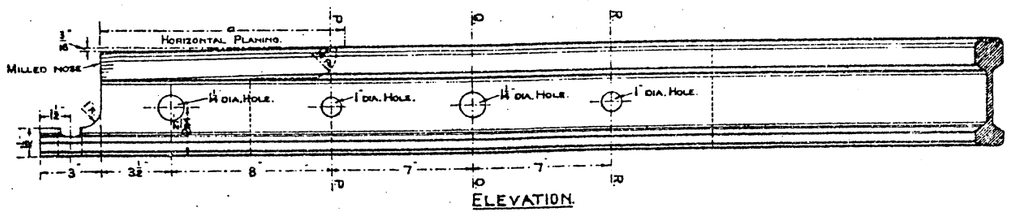

ELEVATION.

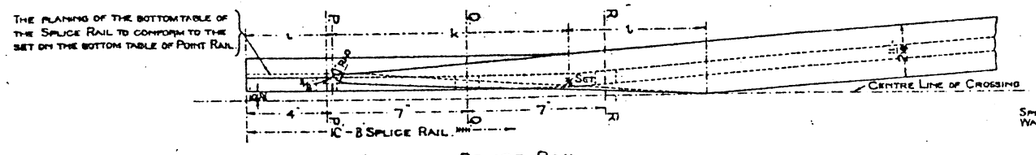

SPLICE RAIL.

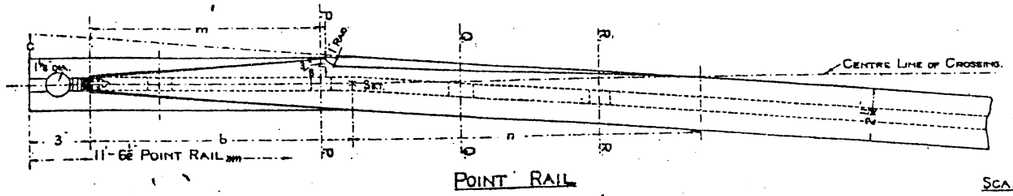

POINT RAIL.

— DETAILS OF CROSSING NOSE. —

SCALE:— 1½ INCHES — 1 FOOT.

NOTES.

The Point and Splice Rails to be vertical from the nose of the Point Rail to the heel of the Splice. From the latter point each Rail to be gradually canted towards the running side until the full inclination of 1 in 20 from the vertical is reached at a distance of seven feet six inches back from the nose.

The Wing Rails to be canted towards the running side at an inclination of 1 in 20 from the vertical.

The Check Rails to be vertical.

All Bolts and Nuts to conform to the British Standard Specification Nº 64 and to be fitted with Spring Washers.

8'-0" Check Rails to be used with these crossings, for Details see Drawing Nº 79. (1 in 8 common crossing.)

The following Details applicable to all common crossings appear on Drawing Nº 79.

"Crossing nose before and after milling, and fitting of Splice"
"Holding – down Bolt, Saddle and Washer Plate"
"C.I. Washers also Chair Screw for built-up 'A' Chair fastenings"

For Details of common crossing Chairs, see Drawing Nºs 83, 84, 85.

For Details of the S.2. Chair, see Drawing Nº 52.

For Details of the L.2. Chair, see Drawing Nº 53.

The angle of crossing in 1" figures to be stamped on the outside of the web of the Point, Splice and Wing Rails, 2'-4" from fishjoint end.

Dimensions referring to Cross Sections.

Angle of Crossing.	e	f	g	h
1 in 6	2 27/64"	3 45/64"	2 39/64"	4 15/16"
1 in 6½	2 23/64"	3 17/32"	2 29/64"	4 39/44"

Dimensions referring to Details of Crossing Nose.

Angle of Crossing	a	b	c	i	k	l	m	n
1 in 6	1 1/4"	1'-0 1/8"	1 1/4"	3/8"	10 5/16"	6 7/8"	10 7/8"	1'-4 3/16"
1 in 6½	1 3/8"	1'-0 1/16"	1 3/64"	15/64"	4 9/32"	11 53/64"	6 41/64"	1'-5 25/32" 33/64"

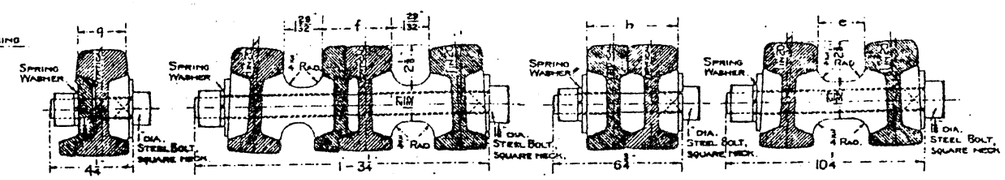

SECTION P.P. SECTION Q.Q. SECTION R.R. SECTION THROUGH NECK BOLT.

STANDARD RAILWAY EQUIPMENT — PERMANENT WAY.

COMMON CROSSINGS 1 IN 7 & 1 IN 7½

85 R. B.S. RAIL.

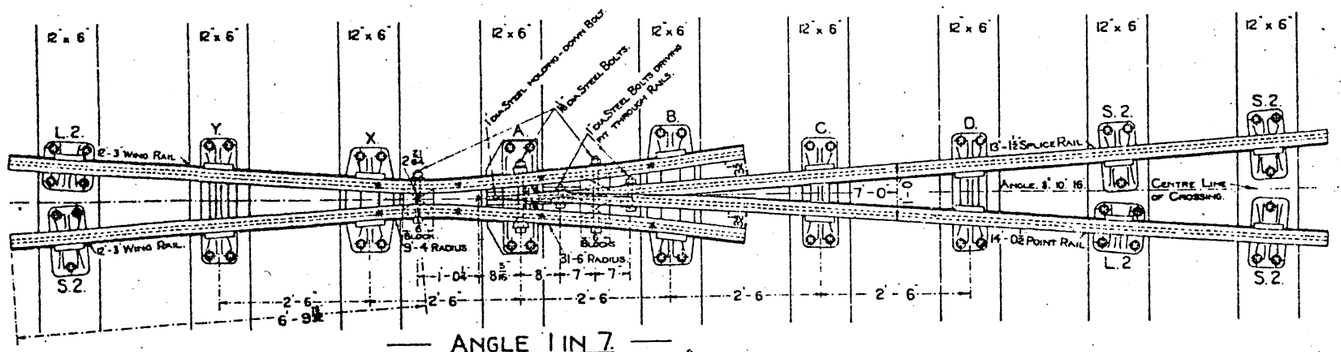

— ANGLE 1 IN 7 —

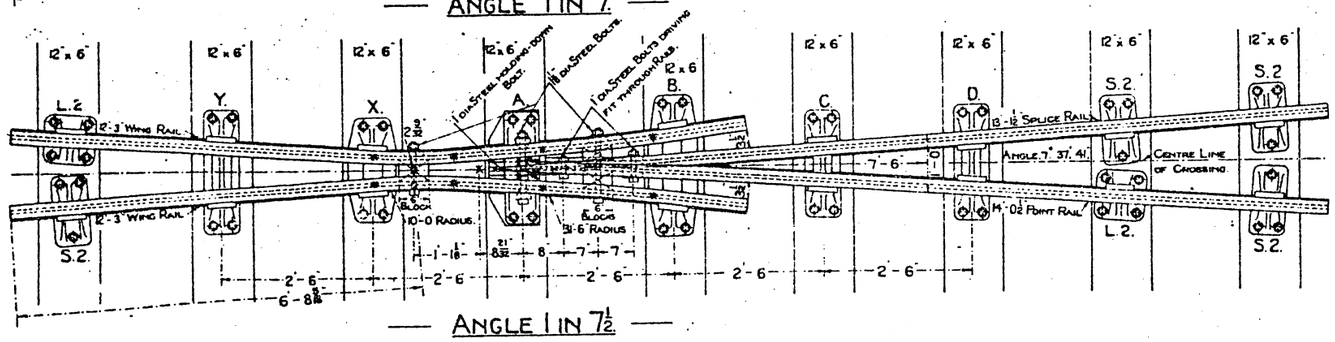

— ANGLE 1 IN 7½ —

SCALE:- ⅜ INCH = 1 FOOT.

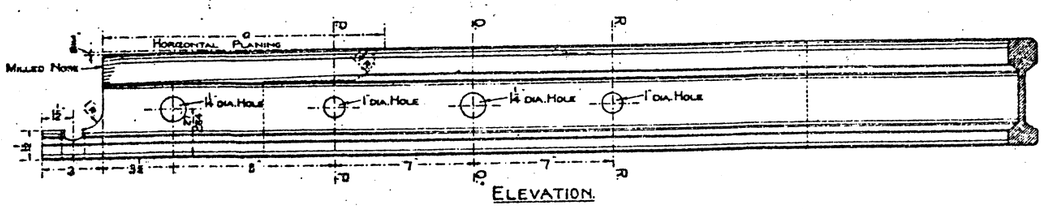

ELEVATION.

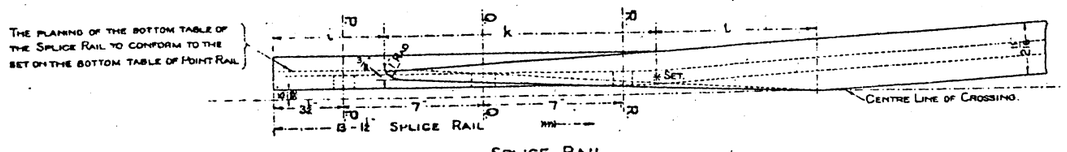

SPLICE RAIL.

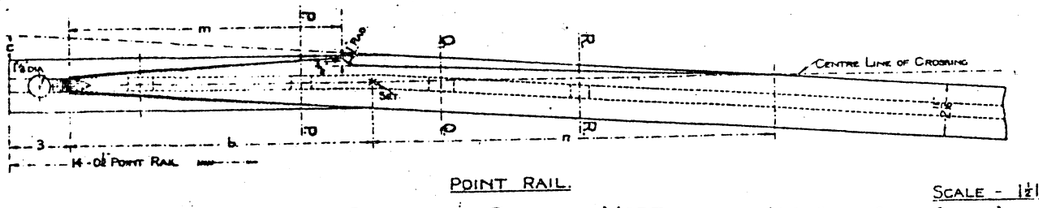

POINT RAIL.

— DETAILS OF CROSSING NOSE. —

SCALE - 1½ INCHES = 1 FOOT.

NOTES

The Point and Splice Rails to be vertical from the nose of the Point to the heel of the Splice. From the latter point each Rail to be gradually canted towards the running side until the full inclination of 1 in 20 from the vertical is reached at a distance of ten feet back from the nose.

The Wing Rails to be canted towards the running side at an inclination of 1 in 20 from the vertical.

The Check Rails to be vertical.

All Bolts and Nuts to conform to the British Standard Specification No. 64 and to be fitted with Spring Washers.

13'-0" Check Rails to be used with these crossings, for Details see Drawing No. 79 (1 in 8 common crossing.)

The following Details applicable to all common crossings appear on Drawing No. 79.

"Crossing nose before and after milling, and fitting of Splice."
"Holding-down Bolt, Saddle and Washer Plate."
"C.I. Washers, also Chair Screw for built-up 'A' chair fastenings."

For Details of common crossing Chairs, see Drawing Nos. 83, 84, 85.

For Details of the S.2 Chair, see Drawing No. 52.

For Details of the L.2 Chair, see Drawing No. 53.

The angle of crossing in 1" figures to be stamped on the outside of the web of the Point, Splice and Wing Rails, 2'-4" from fishjoint end.

Dimensions referring to Cross Sections.

Angle of Crossing	e	f	g	h
1 in 7	2 21/64"	3 21/64"	2 21/64"	4 21/64"
1 in 7½	2 9/32"	3 5/32"	2 7/32"	4 3/32"

Dimensions referring to Details of Crossing Nose

Angle of Crossing	a	b	c	i	k	l	m	n
1 in 7	1'-1 1/16"	1'-2 3/64"	1 7/32"	4 11/16"	1' 0 47/64"	7 31/64"	1'-0 11/16"	1'-6 55/64"
1 in 7½	1'-2 1/16"	1'-3 3/64"	1 13/64"	5 19/32"	1'-1 41/64"	8 1/64"	1'-1 19/32"	1'-8 15/64"

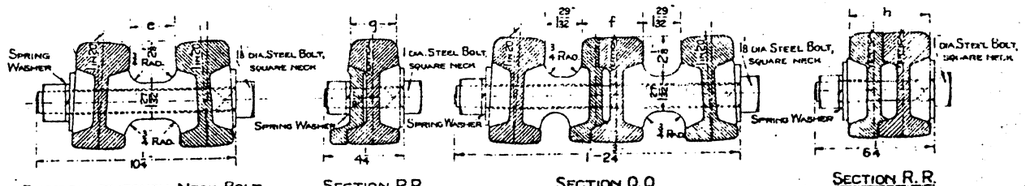

STANDARD RAILWAY EQUIPMENT — PERMANENT WAY.

COMMON CROSSING 1 IN 8.

85 R. B.S. RAIL.

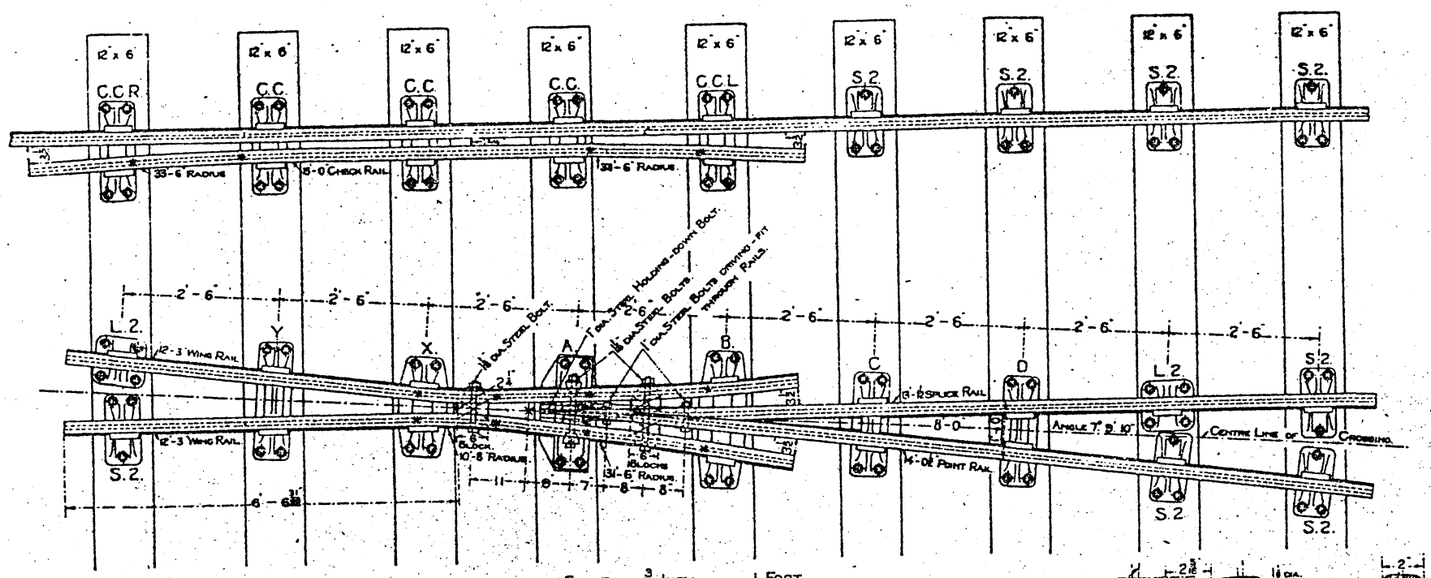

Scale:— 3/8 Inch — 1 Foot.

Notes.

The Point and Splice Rails to be vertical from the nose of the Point Rail to the heel of the Splice. From the latter Point each Rail to be gradually canted towards the running side until the full inclination of 1 in 20 from the vertical is reached at a distance of ten feet each from the nose.

The Wing Rails to be canted towards the running side at an inclination of 1 in 20 from the vertical.

The Check Rails to be vertical.

All Bolts and Nuts to conform to the British Standard Specification No. 64 and to be fitted with Spring Washers.

For Details of common crossing Chairs, see Drawing Nos. 83, 84, 85.

For Details of the S.2. Chair, see Drawing No. 52.

For Details of the L.2. Chair, see Drawing No. 53.

The angle of crossing in figures to be stamped on the outside of the web of the Point, Splice and Wing Rails, 2'-4" from fishjoint end.

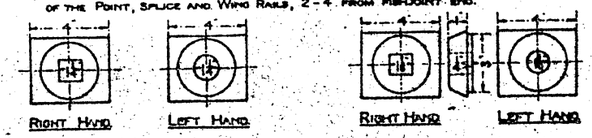

Cast Iron Washers for 1/2" Bolts.

Cast Iron Washers for 1" Bolts.

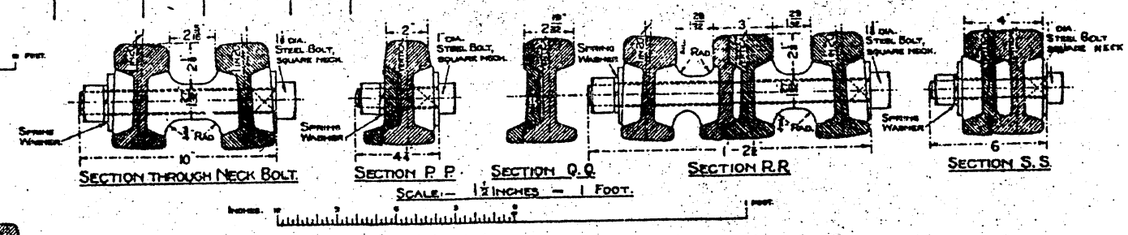

Section through Neck Bolt. Section P.P. Section Q.Q. Section R.R. Section S.S.

Scale:— 1 1/2 Inches — 1 Foot.

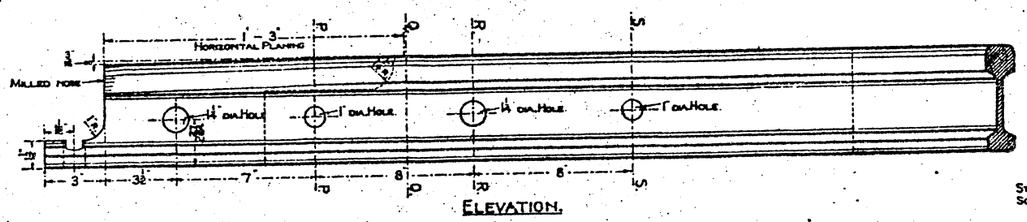

Elevation.

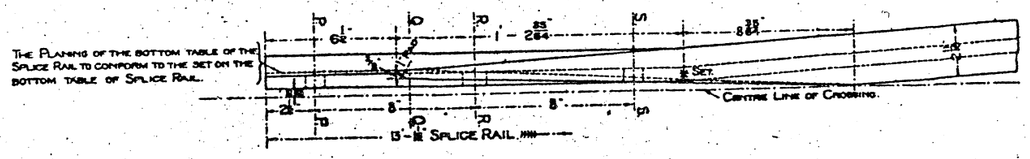

Splice Rail.

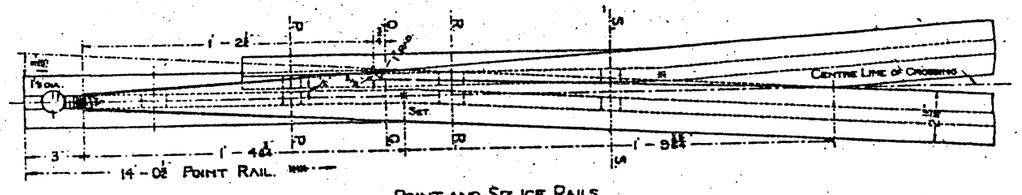

Point and Splice Rails.

Scale:— 1 1/2 Inches — 1 Foot.

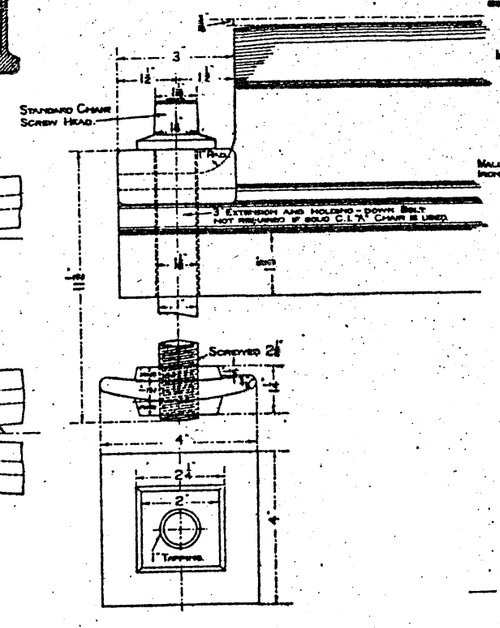

Holding-down Bolt and Plate.

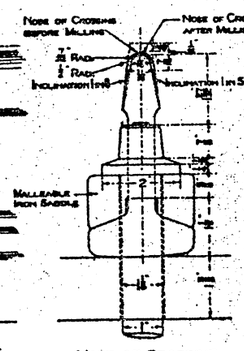

Nose of Crossing.

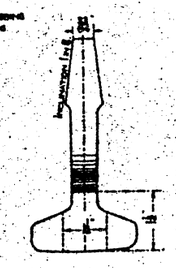

Nose of Crossing after Side Planing.

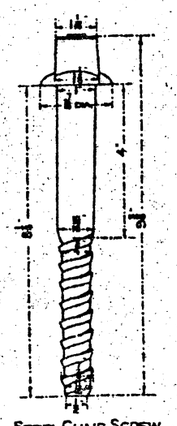

Steel Chair Screw for "A" Chair Fastening.

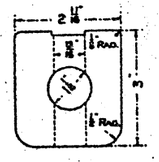

Plan of Saddle.

— Quarter Full Size. —

STANDARD RAILWAY EQUIPMENT — PERMANENT WAY.

Nº 80.

COMMON CROSSINGS 1 IN 9 & 1 IN 10.

85 R. B.S. RAIL.

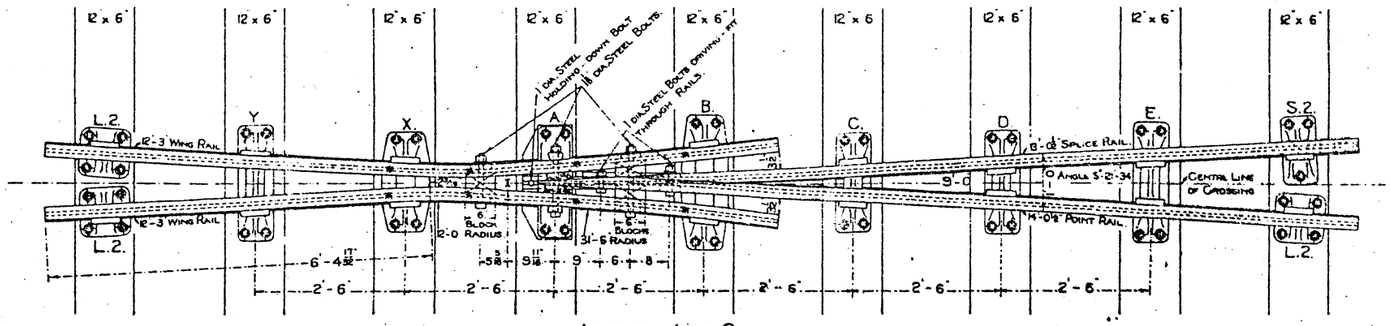

— ANGLE 1 IN 9 —

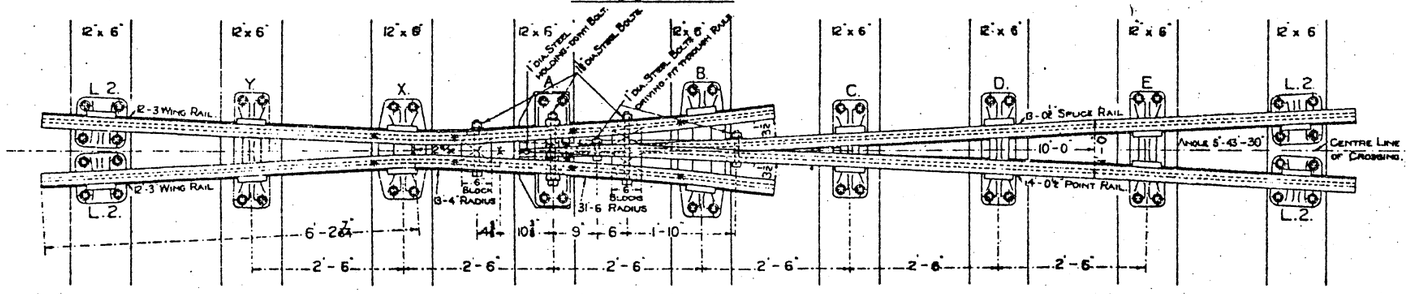

— ANGLE 1 IN 10 —

SCALE:- 3/8 INCH = 1 FOOT.

NOTES

The Point and Splice Rails to be vertical from the nose of the Point Rail to the heel of the Splice. From the latter point each Rail to be gradually canted towards the running side until the full inclination of 1 in 20 from the vertical is reached at a distance of twelve feet six inches back from the nose.

The Wing Rails to be canted towards the running side at an inclination of 1 in 20 from the vertical.

The Check Rails to be vertical.

All Bolts and Nuts to conform to the British Standard Specification Nº 64 and to be fitted with Spring Washers.

6'-0" Check Rails to be used with these Crossings, for Details see Drawing Nº 79 (1 in 8 common crossing).

The following Details applicable to all common crossings appear on Drawing Nº 79.

"Crossing Nose before and after milling, and fitting of Splice."
"Holding-down Bolt, Saddle and Washer Plate."
"C.I. Washers, also Chair Screw for built-up 'A' Chair fastenings."

For Details of common crossing Chairs, see Drawing Nºs 83, 84 85.

For Details of the S.2. Chair see Drawing Nº 52.

For Details of the L.2. Chair, see Drawing Nº 53.

The angle of crossing in 1" figures to be stamped on the outside of the web of the Point, Splice and Wing Rails, 2'-4" from fishjoint end.

Dimensions referring to Cross Sections.

Angle of Crossing.	e	q	f	h
1 in 9	2 23/32"	2 5/64"	2 3/4"	3 5/8"
1 in 10	3 1/32"	1 15/16"	2 17/32"	4 47/64"

Dimensions referring to Details of Crossing Nose.

Angle of Crossing	a	b	c	ι	k	t	m	n	q
1 in 9	1'-4 7/8"	1'-6 1/32"	1 11/64"	7 5/16"	1'-4 11/32"	9 19/32"	1'-4 5/16"	2'-0 7/32"	8"
1 in 10	1'-6 3/4"	1'-8 1/32"	1 9/32"	9 1/8"	1'-6 5/32"	10 21/32"	1'-6 1/8"	2'-2 29/32"	1'-10"

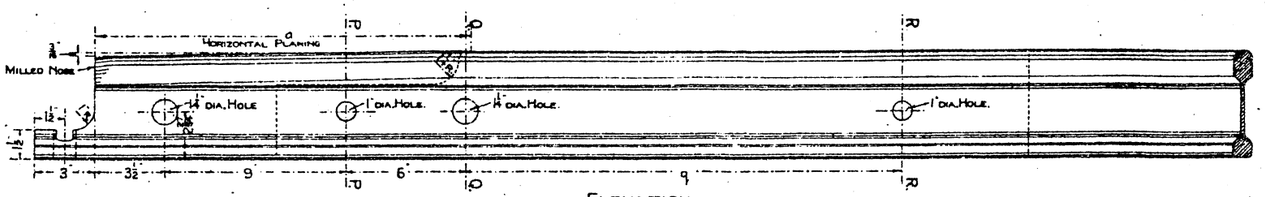

ELEVATION.

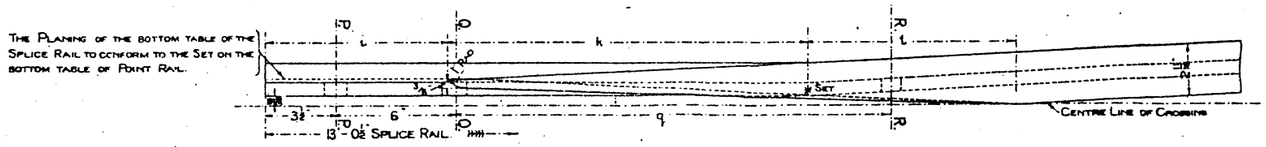

SPLICE RAIL.

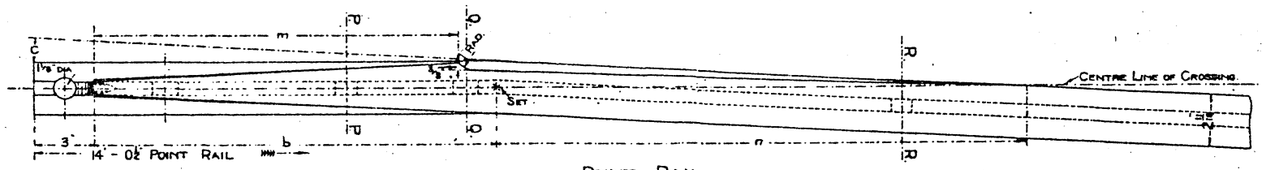

POINT RAIL.

— DETAILS OF CROSSING NOSE. —

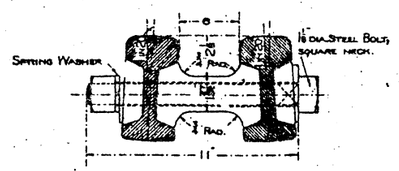

SECTION THROUGH NECK BOLT.

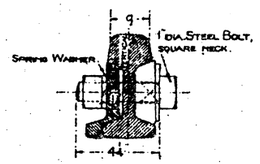

SECTION P.P.

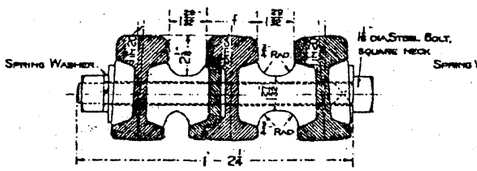

SECTION Q.Q.

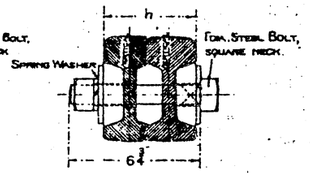

SECTION R.R.

SCALE:- 1½ INCHES = 1 FOOT

STANDARD RAILWAY EQUIPMENT — PERMANENT WAY.

Nº 81.

COMMON CROSSING 1 IN 12.

85 R. B.S. RAIL.

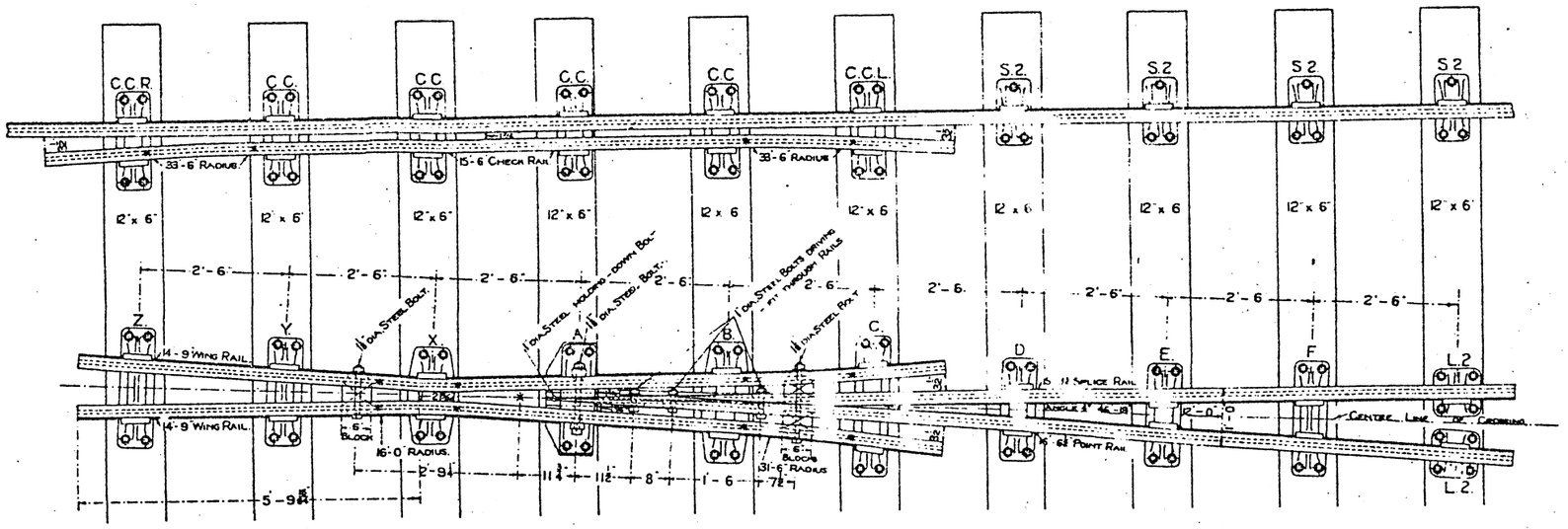

Scale:— 3/8 Inch — 1 Foot.

NOTES.

The Point and Splice Rails to be vertical from the nose of the Point Rail to the heel of the Splice. From the latter point each Rail to be gradually canted towards the running side until the full inclination of 1 in 20 from the vertical is reached at a distance of fifteen feet back from the nose.

The Wing Rails to be canted towards the running side at an inclination of 1 in 20 from the vertical.

The Check Rails to be vertical.

All Bolts and Nuts to conform to the British Standard Specification Nº 64 and to be fitted with Spring Washers.

The following Details applicable to all common crossings appear on Drawing Nº 79.

"Crossing nose before and after milling, and fitting of Splice."
"Holding-down Bolt, Saddle and Washer Plate."
"C.I. Washers, also Chair Screw for built-up 'A' Chair fastenings."

For Details of common crossing Chairs, see Drawing Nºs 83, 84, 85.

For Details of the S.2. Chair, see Drawing Nº 52.

For Details of the L.2. Chair, see Drawing Nº 53.

The angle of crossing in 1" figures to be stamped on the outside of the web of the Point, Splice and Wing Rails, 2'-4" from fishjoint end.

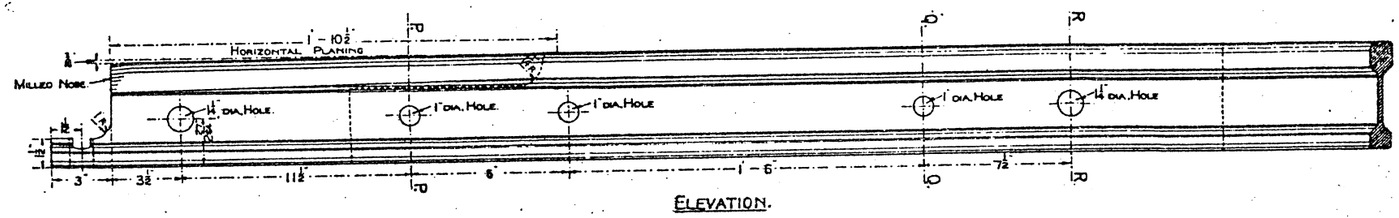

Elevation.

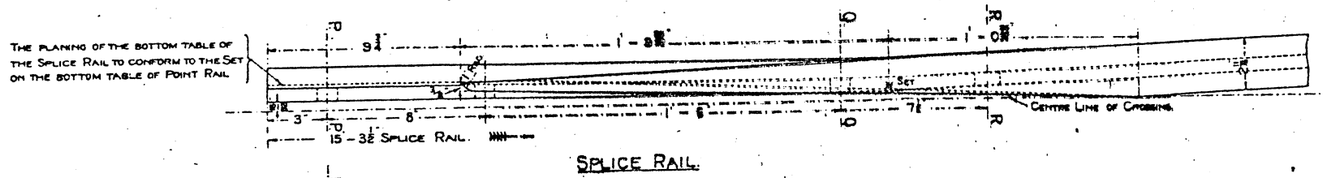

Splice Rail.

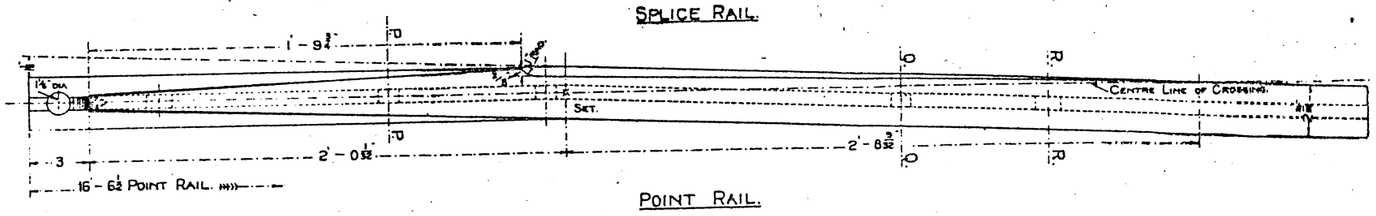

Point Rail.

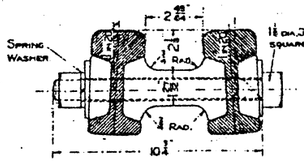

Section through Neck Bolt.

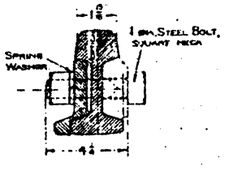

Section P.P.

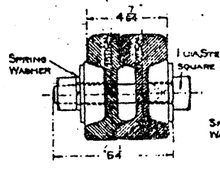

Section Q.Q.

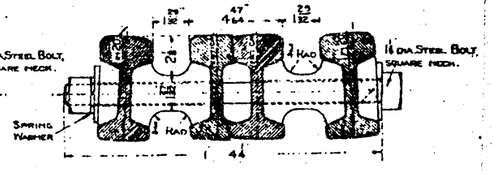

Section R.R.

Details of Crossing Nose.

Scale:— 1 1/2 Inches — 1 Foot.

STANDARD RAILWAY EQUIPMENT — PERMANENT WAY.

COMMON CROSSINGS 1 IN 11 & 1 IN 14.

85 R. B. S. RAIL.

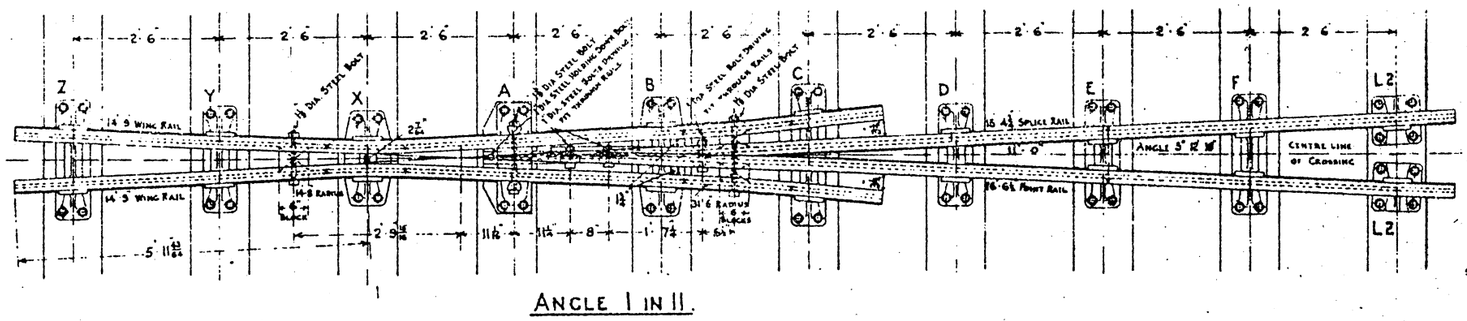

ANGLE 1 IN 11.

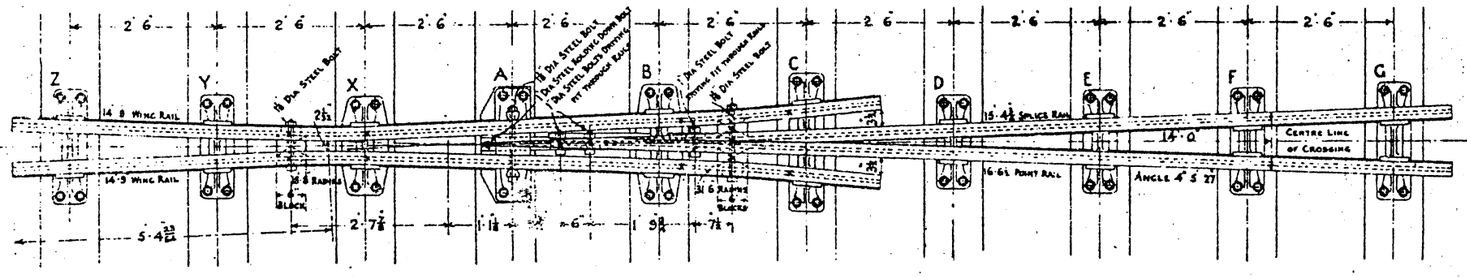

ANGLE 1 IN 14.

SCALE 1½ INCH = 1 FOOT

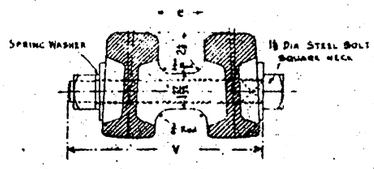

SECTION THROUGH NECK BLOCK.

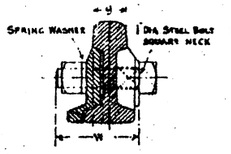

SECTION P.P.

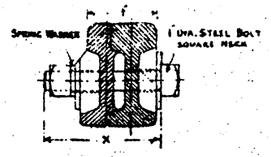

SECTION Q.Q.

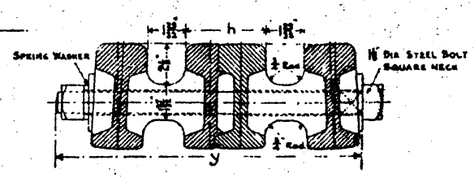

SECTION R.R.

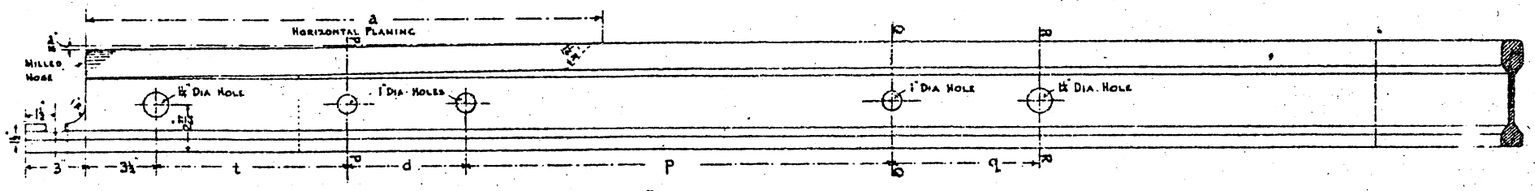

ELEVATION.

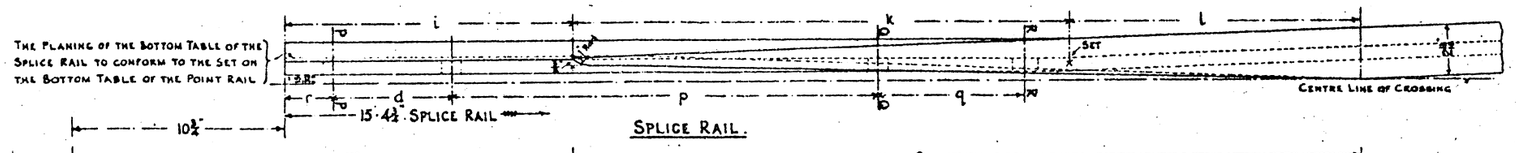

SPLICE RAIL.

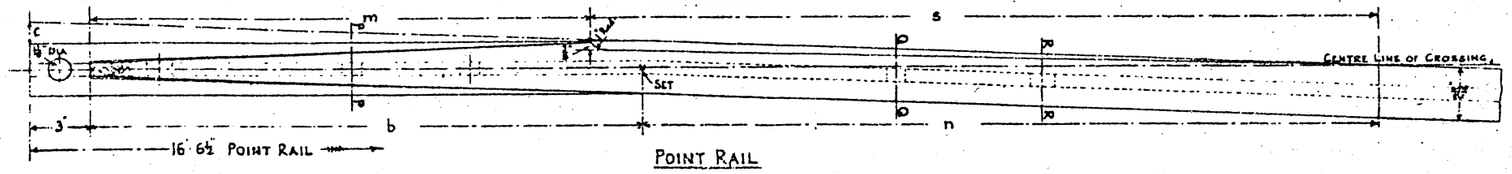

POINT RAIL

DETAILS OF CROSSING NOSE.

SCALE 1½ INCHES = 1 FOOT.

NOTES.

The Point and Splice Rails to be vertical from the nose of the Point Rail to the heel of the Splice. From the latter point each Rail to be gradually canted towards the running side until the full inclination of 1 in 20 from the vertical is reached at a distance of twelve feet back from the nose.

The Wing Rails to be canted towards the running side at an inclination of 1 in 20 from the vertical.

The Check Rails to be vertical.

All Bolts and Nuts to conform to the British Standard Specification No. 60 and to be fitted with Spring Washers.

The following details applicable to all common crossings appear on Drawing No. 79.

"Crossing Nose before and after milling and fitting of Splice
"Holding-down Bolt, Saddle and Washer Plate
"C" Washer, also chair screw for built up "A" chair fastenings"

16·6 Check Rails to be used with these Crossings. For details see Drawing No. 81
For details of common crossing chairs see Drawing No. 81[illegible]
For details of L2 chair see Drawing No. 53

The angle of crossing in 1" figures to be stamped on the outside of the web of the Point, Splice and Wing Rails 2·4" from fishjoint end.

DIMENSIONS REFERRING TO DETAILS OF CROSSING NOSE.

Angle of Crossing	a	b	c	d	e	k	l	m	n	p	q	r	s	t
1 in 11	1·8½"	1·10½"	12"	8"	9¾"	1·7 11/32"	11 11/32"	1·7½"	2·5 15/16"	1·7½"	6½"	4"	2·7⅞"	11½"
1 in 14	2·2½"	2·4½"	12"	6"	1·2½"	2·1 11/32"	1·2 11/32"	2·1⅛"	3·1 15/32"	1·9½"	7½"	2½"	3·4⅞"	9½"

DIMENSIONS REFERRING TO CROSS SECTIONS.

Angle of Crossing	e	g	f	h	v	w	x	y
1 in 11	3 11/16"	2 29/32"	4½"	5 11/16"	11"	4½"	6½"	1·4½"
1 in 14	2 29/32"	[illegible]"	3 15/16"	4 15/16"	10½"	4½"	6"	1·4"

STANDARD RAILWAY EQUIPMENT – PERMANENT WAY.

N°81P

CHAIRS FOR 1 IN 11 AND 1 IN 14 COMMON CROSSINGS.

85 R. B. S. RAIL.

BUILT UP A CHAIR

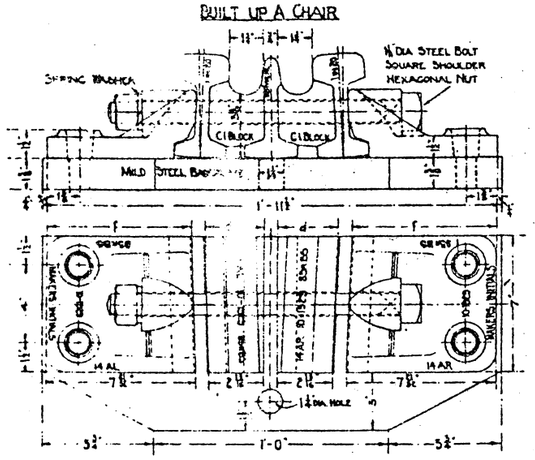

SOLID CAST IRON A CHAIR

NOTE. WHEN THIS CHAIR IS USED THE 3" EXTENSION OF THE POINT RAIL FOR HOLDING-DOWN BOLT IS NOT REQUIRED.

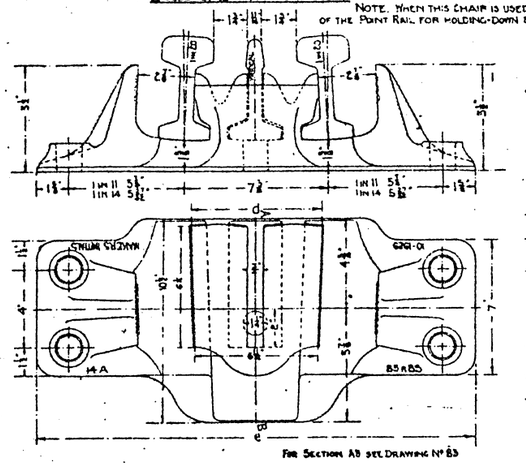

B CHAIR

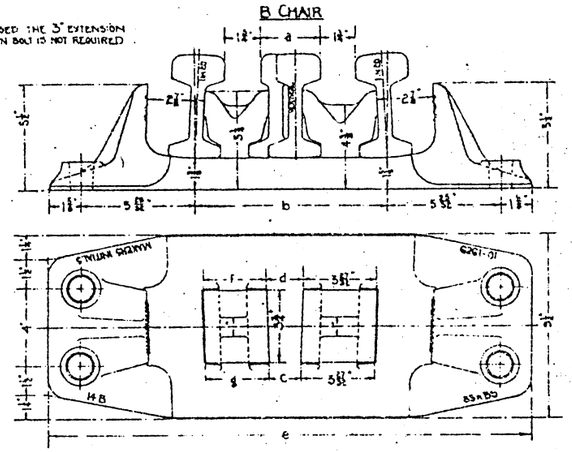

DIMENSIONS OF CHAIRS FOR 1 IN 11 CROSSING

CHAIR	a	b	c	d	e	f	g	APPROX. WEIGHT	VARYING INCLINATION
A BUILT UP	—	—	—	3¼"	—	7 15/16"	—	178 LBS	VERTICAL
A CAST	—	—	—	6 13/32"	1'-10⅞"	—	—	105 LBS	VERTICAL
B	3 27/64"	10⅞"	1 15/16"	2 3/32"	2'-1¼"	3⅝"	3 15/32"	105 LBS	VERTICAL
C	6 29/64"	1'-2 29/32"	4⅝"	4⅝"	2'-5 11/32"	—	—	106 LBS	1 IN 156
D	9⅝"	6¼"	5 13/32"	5 13/16"	1'-5¼"	—	—	69 LBS	1 IN 44
E	11 29/64"	8 11/32"	5⅝"	5 11/32"	1'-10 5/32"	—	—	74 LBS	1 IN 26
F	1'-2 21/64"	11 13/32"	1'-0 [illegible]	[illegible]	2'-1⅞"	—	—	80 LBS	1 IN 20
X	2 3/64"	5 9/64"	[illegible]	[illegible]	1'-8⅛"	—	—	81 LBS	1 IN 20
Y	4 29/64"	7⅝"	6¼"	6¼"	1'-10¼"	—	—	76 LBS	1 IN 20
Z	7 29/64"	10⅝"	9 13/32"	9⅝"	2'-1⅞"	—	—	79 LBS	1 IN 20

C CHAIR

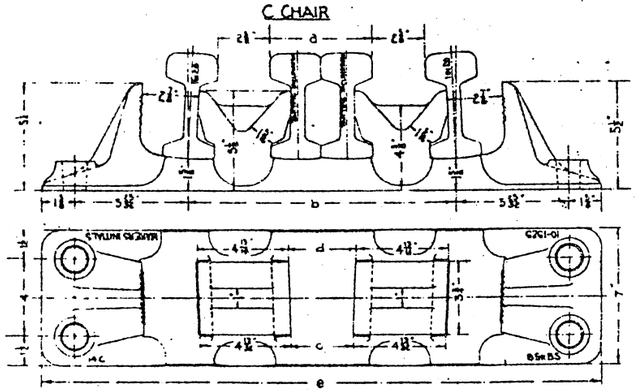

D CHAIR AND 1 IN 14 E CHAIR

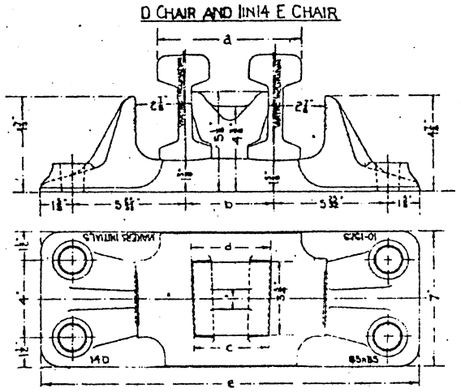

1 IN 11 E AND F CHAIRS
1 IN 14 F AND G CHAIRS

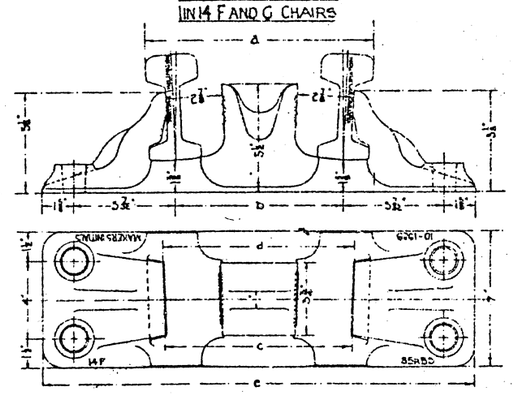

DIMENSIONS OF CHAIRS FOR 1 IN 14 CROSSING

CHAIR	a	b	c	d	e	f	g	APPROX. WEIGHT	VARYING INCLINATION
A BUILT UP	—	—	—	3¼"	—	7 15/16"	—	178 LBS.	VERTICAL
A CAST	—	—	—	6 13/32"	1'-10⅞"	—	—	105 LBS	VERTICAL
B	3¼"	9 15/64"	1⅞"	1⅞"	2'-0 11/32"	5¼"	3 15/32"	101 LBS	VERTICAL
C	5¼"	1'-1 15/32"	[illegible]	3 15/32"	2'-4 11/32"	—	—	102 LBS.	VERTICAL
D	7 15/32"	4½"	[illegible]	4⅝"	1'-7⅝"	—	—	62 LBS.	1 IN 56
E	9½"	6 7/32"	5¼"	6⅛"	1'-9¼"	—	—	67 LBS	1 IN 27
F	11⅝"	8 11/32"	5⅞"	5⅞"	1'-10⅝"	—	—	73 LBS	1 IN 20
G	1'-1 21/64"	10⅞"	11 13/32"	11 13/32"	2'-0⅝"	—	—	76 LBS	1 IN 20
X	2 13/64"	5⅞"	4⅝"	4⅝"	1'-8⅝"	—	—	81 LBS	1 IN 20
Y	3⅝"	6 15/32"	5⅞"	5⅞"	1'-9⅝"	—	—	72 LBS	1 IN 20
Z	5¼"	8 15/16"	7⅞"	7⅞"	1'-11⅞"	—	—	78 LBS	1 IN 20

X CHAIR

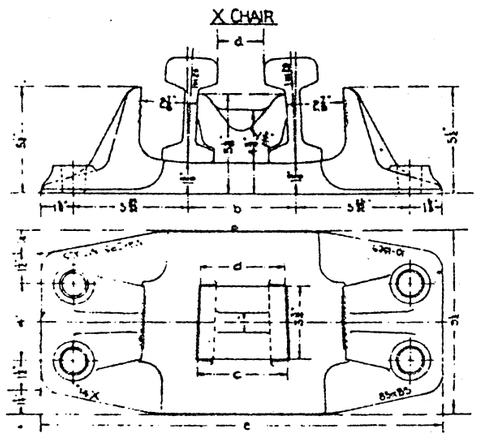

Y AND Z CHAIRS

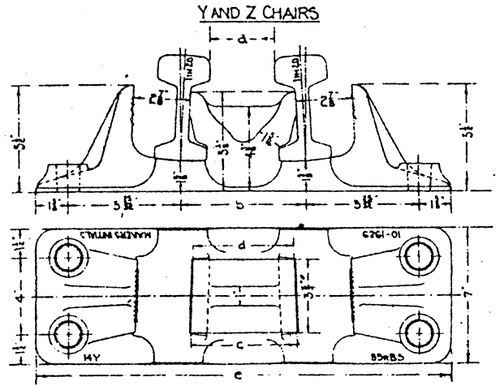

SCALE – 1½ INCHES = 1 FOOT

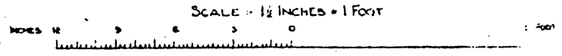

NOTES

THE RAIL JAW OF ALL CROSSING CHAIRS TO CONFORM TO THE PROFILE OF THE RAIL JAW OF THE S.2. CHAIR (DRAWING N° 52), SUBJECT, HOWEVER, TO THE ESSENTIAL DIFFERENCE IN THE HORIZONTAL INCLINATION NECESSITATED BY THE ANGLE OF THE CROSSING

THE DETAILS OF THE KEY JAW ARE SHEWN ON DRAWING N° 85 AND THIS DRAWING IS TYPICAL OF KEY JAWS FOR ALL CROSSING CHAIRS SUBJECT TO THE ESSENTIAL DIFFERENCE IN THE HORIZONTAL INCLINATION NECESSITATED BY THE ANGLE OF THE CROSSING AND SUBJECT ALSO TO THE HEIGHT BEING 4½" INSTEAD OF 5¼" IN THE CASE OF 'D' AND 'E' CHAIRS FOR THE 1 IN 14 CROSSING, AND THE 'D' CHAIR FOR THE 1 IN 11 CROSSING

THE DETAILS OF THE C.I. BRACKETS FOR THE BUILT UP A CHAIR ARE SHEWN ON DRAWING N° 83 AND THIS DRAWING IS TYPICAL OF THE BRACKETS FOR THESE CROSSINGS, SUBJECT TO THE ESSENTIAL DIFFERENCE IN THE HORIZONTAL INCLINATION NECESSITATED BY THE ANGLES OF THE CROSSINGS.

THE HORIZONTAL DIMENSIONS APPEARING IN THE ELEVATION DRAWINGS ARE THOSE OBTAINING IN THE CENTRE OF THE CHAIR EXCEPTING IN THE CASE OF THE A CHAIRS WHICH LATTER ARE TAKEN NOT AT THE CHAIR BUT AT THE POINT OF THE CROSSING.

THE HOLES IN THE CHAIR BASES TO TAKE THE STANDARD FERRULE AND SCREW

THE NUMBER OF THE CROSSING TO BE CAST ON EACH SPECIAL CHAIR IN FRONT OF THE CHAIR LETTER TO INDICATE FOR WHICH ANGLE OF CROSSING IT HAS BEEN DESIGNED. THE DATE OF MANUFACTURE, MAKER'S INITIALS, AND WEIGHT OF RAIL DESIGNED FOR, ARE ALSO TO BE CAST ON EACH CHAIR

STANDARD RAILWAY EQUIPMENT — PERMANENT WAY.

Nº 82.

COMMON CROSSING 1 IN 16.

85 R. B.S. RAIL.

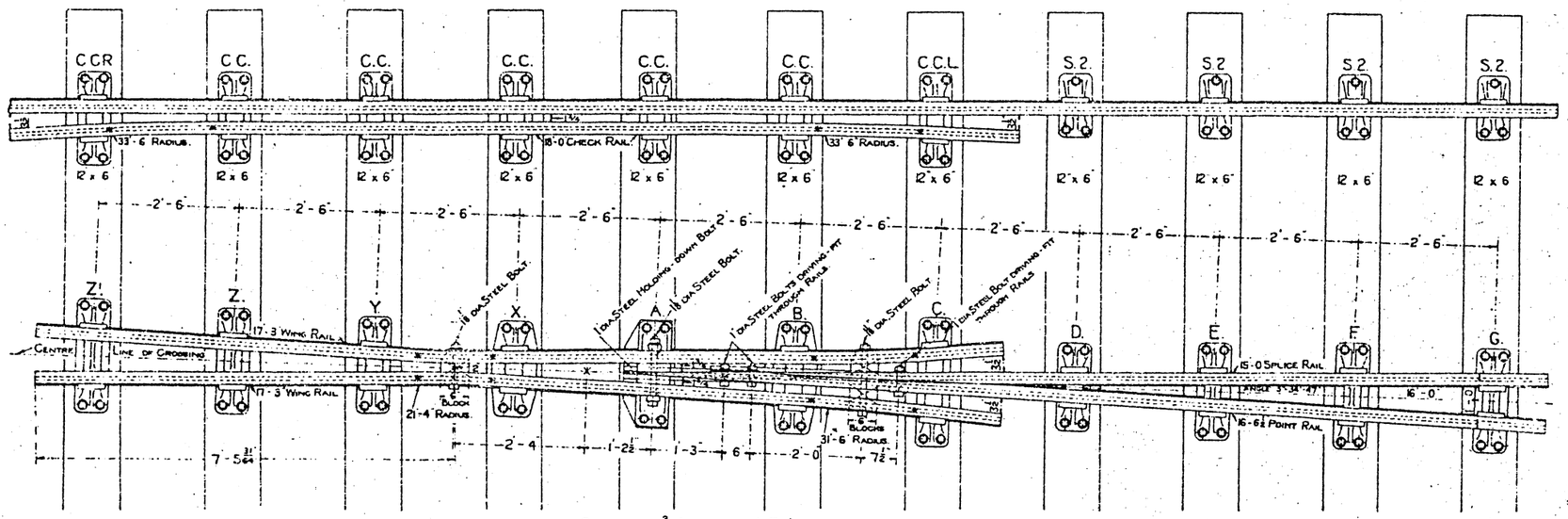

Scale :- 3/8 Inch - 1 Foot.

Notes.

The Point and Splice Rails to be vertical from the nose of the Point Rail to the heel of the Splice. From the latter point each Rail to be gradually canted towards the running side until the full inclination of 1 in 20 from the vertical is reached at a distance of fifteen feet back from the nose.

The Wing Rails to be canted towards the running side at an inclination of 1 in 20 from the vertical.

The Check Rails to be vertical.

All Bolts and Nuts to conform to the British Standard Specification Nº 64 and to be fitted with Spring Washers.

The following Details applicable to all common crossings appear on Drawing Nº 79.

"Crossing Nose before and after milling, and fitting of Splice."
"Holding-down Bolt, Saddle and Washer-plate."
"C 1 Washers, also Chair Screw for built-up 'A' Chair fastenings."

For Details of Common Crossing Chairs, see Drawing Nºs 83, 84, 85.

For Details of the S 2 Chair, see Drawing Nº 52.

The angle of crossing in 1 figures to be stamped on the outside of the web of the Point, Splice and Wing Rails, 2'-4 from fishjoint end.

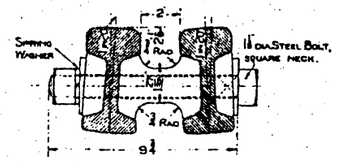

Section through Neck Bolt.

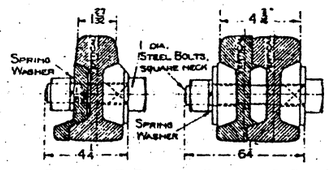

Section P.P. Section R.R.

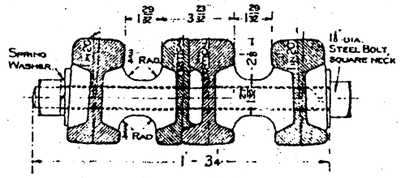

Section Q.Q.

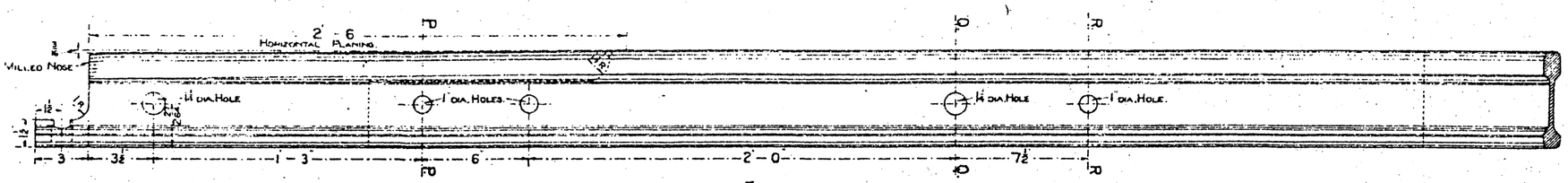

Elevation.

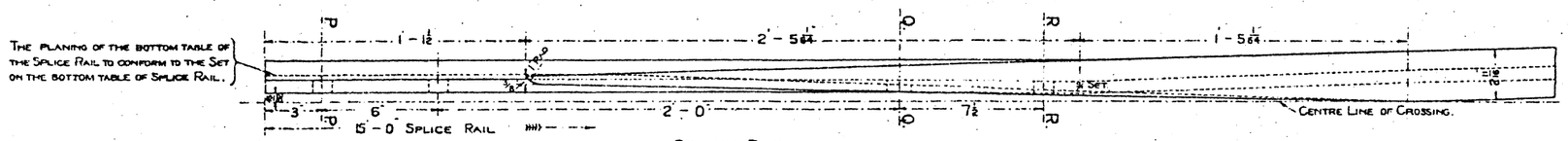

Splice Rail.

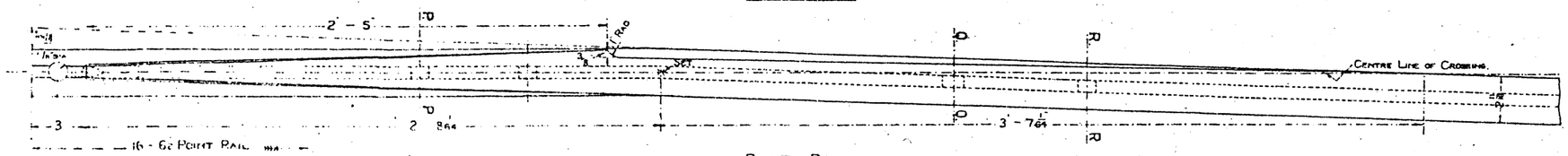

Point Rail.

— Details of Crossing Nose. —

Scale - 1½ Inches - 1 Foot.

STANDARD RAILWAY EQUIPMENT — PERMANENT WAY. Nº 83.

CHAIRS FOR COMMON CROSSINGS.

85 R. B.S. RAIL.

BUILT-UP A. CHAIR.
CROSSINGS 1 IN 4 TO 1 IN 5½.

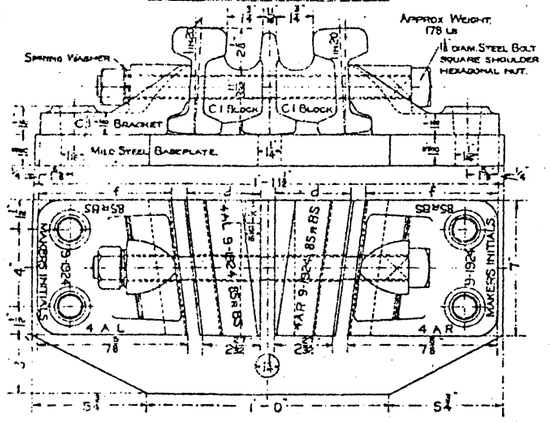

BUILT-UP A. CHAIR.
CROSSINGS 1 IN 6 TO 1 IN 16.

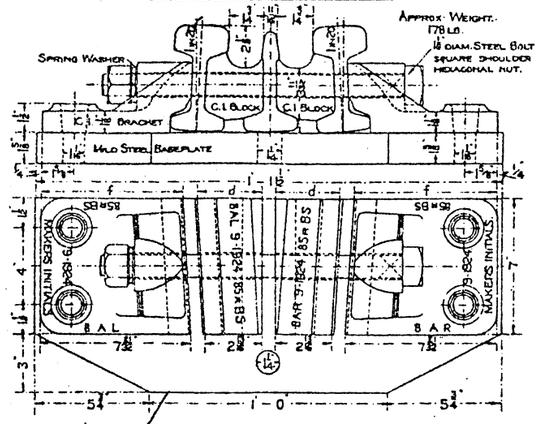

SOLID CAST IRON A. CHAIR.
CROSSINGS 1 IN 4 TO 1 IN 5½.

NOTE: WHEN THIS CHAIR IS USED FOR 3' EXTENSION OF POINT RAIL FOR HOLDING DOWN BOLT IS NOT REQUIRED.

APPROX. WEIGHT. 105 LB.

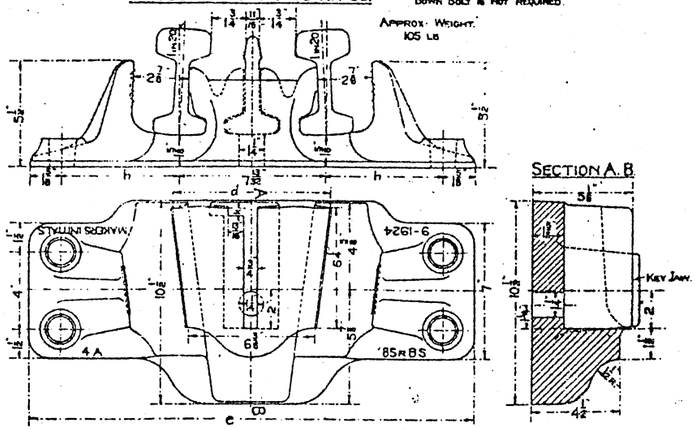

SECTION A.B.

SOLID CAST IRON A. CHAIR
CROSSINGS 1 IN 6 TO 1 IN 16.

NOTE - WHEN THIS CHAIR IS USED THE 3' EXTENSION OF POINT RAIL FOR HOLDING-DOWN BOLT IS NOT REQUIRED.

APPROX. WEIGHT 105 LB.

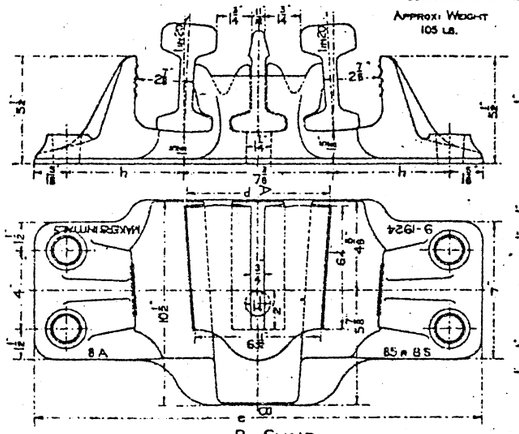

B. CHAIR.
CROSSINGS 1 IN 4 TO 1 IN 5.

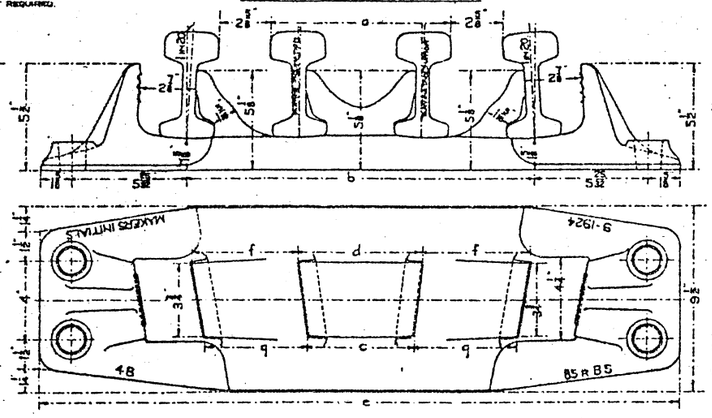

B. CHAIR.
CROSSINGS 1 IN 5½ TO 1 IN 9.

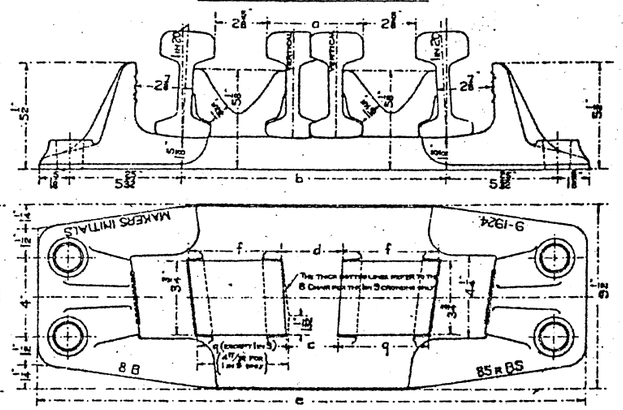

B. CHAIR
CROSSINGS 1 IN 10 TO 1 IN 16.

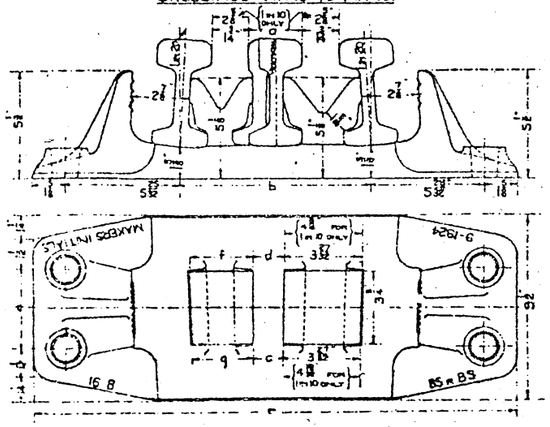

DIMENSIONS OF BUILT-UP A. CHAIRS.

CROSSING.	d	f	k	CROSSING.	d	f
1 IN 4	3 29/32"	6 3/4"	1 1/16"	1 IN 6	3 27/32"	7 1/16"
1 IN 4½	3 3/8"	6 27/32"	1 1/16"	1 IN 6½	3 11/32"	7 1/8"
1 IN 5	3 3/16"	6 29/32"	1"	1 IN 7	3 5/16"	7 5/32"
1 IN 5½	3 5/32"	7"	1"	1 IN 7½	3 9/32"	7 3/16"
				1 IN 8	3 1/4"	7 7/32"
				1 IN 9	3 3/16"	7 9/32"
				1 IN 10	3 5/32"	7 5/16"
				1 IN 12	3 3/32"	7 3/8"
				1 IN 16	3 1/32"	7 7/16"

DIMENSIONS OF SOLID C.I. A. CHAIRS.

CROSSING.	h.	d	e	k
1 IN 4	6 1/32"	7 5/16"	1-10 3/8"	3/8"
1 IN 4½	6"	7 1/32"	1-10 1/8"	1/8"
1 IN 5	5 31/32"	7 1/8"	1-10 11/32"	1/4"
1 IN 5½	5 27/32"	7 1/2"	1-10 11/32"	1/4"
1 IN 6	5 23/32"	7 3/8"	1-10 1/2"	
1 IN 6½	5 15/16"	7 5/16"	1-10 1/2"	
1 IN 7	5 13/32"	7 1/4"	1-10 3/8"	
1 IN 7½	5 29/32"	7 3/16"	1-10 3/8"	
1 IN 8	5 27/32"	7 1/8"	1-10 3/8"	
1 IN 9	5 25/32"	7 1/32"	1-10 7/16"	
1 IN 10	5 7/8"	6 31/32"	1-10 3/8"	
1 IN 12	5 7/8"	6 7/8"	1-10 3/8"	
1 IN 16	5 27/32"	6 3/4"	1-10 5/16"	

DIMENSIONS OF B. CHAIRS.

CROSSING	a	b	c	d	g	f	e	APPROX. WEIGHT.	VARYING INCLINATION
1 IN 4	9 1/16"	1-5 13/16"	5 3/32"	6 3/32"	5 1/8"	5 19/32"	2'-8 1/8"	139 LB	1 IN 56
1 IN 4½	8 1/8"	1-4 29/32"	4 15/32"	5 9/32"	5 11/32"	5 5/16"	2'-7 13/32"	137 ·	1 IN 112
1 IN 5	7 29/64"	1-3 27/32"	3 19/32"	4 11/32"	5 5/16"	5 3/8"	2'-6 21/32"	135 ·	1 IN 134
1 IN 5½	6 23/32"	1-3 1/4"	4 1/8"	5 1/8"	4 3/8"	4 7/8"	2'-5 15/16"	133 ·	
1 IN 6	6 9/32"	1-2 3/4"	3 31/32"	4 19/32"	4 19/32"	4 27/32"	2'-5 9/16"	131 ·	
1 IN 6½	5 29/32"	1-2 29/32"	3 3/16"	4 1/8"	4 13/32"	4 27/32"	2'-5 3/32"	129 ·	
1 IN 7	5 5/32"	1-1 29/32"	3 3/32"	3 3/4"	4 3/32"	4 13/16"	2'-4 23/32"	127 ·	
1 IN 7½	5 1/8"	1-1 19/32"	2 29/32"	3 3/32"	4 3/32"	4 13/16"	2'-4 3/32"	124 ·	
1 IN 8	4 7/8"	1-1 5/16"	2 21/32"	3 1/8"	4 3/32"	4 13/16"	2'-4 1/8"	121 ·	
1 IN 9	4 13/32"	1-0 27/32"	2 1/4"	2 7/8"	4 5/32"	4 13/16"	2'-3 21/32"	118 ·	
1 IN 10	4 3/32"	1-0 13/32"	2 3/32"	2 9/32"	4 1/8"	4 23/32"	2'-3 9/32"	105 ·	
1 IN 12	3 15/32"	10 5/32"	1 13/16"	1 31/32"	3 5/16"	3 15/32"	2'-0 31/32"	102 ·	
1 IN 16	2 29/32"	9 15/32"	1 1/2"	1 15/32"	3"	3 1/8"	2'-0 25/32"	100 ·	

NOTES.

THE RAIL JAW OF ALL CROSSING CHAIRS TO CONFORM TO THE PROFILE OF THE RAIL JAW OF THE S.2 CHAIR (DRAWING Nº 52), SUBJECT, HOWEVER, TO THE ESSENTIAL DIFFERENCE IN THE HORIZONTAL INCLINATION NECESSITATED BY THE ANGLE OF THE CROSSING.

THE DETAILS OF THE KEY JAW ARE SHOWN ON DRAWING Nº 85 AND THIS DRAWING IS TYPICAL OF KEY JAWS IN ALL CROSSING CHAIRS SUBJECT TO THE ESSENTIAL DIFFERENCE IN THE HORIZONTAL INCLINATION NECESSITATED BY THE ANGLE OF THE CROSSING.

THE DETAILS OF THE C.I. BRACKETS FOR THE BUILT UP A CHAIR ARE SHOWN ON THIS DRAWING AND THIS DRAWING IS TYPICAL OF THE BRACKETS FOR ALL CROSSINGS, SUBJECT TO THE ESSENTIAL DIFFERENCE IN THE HORIZONTAL INCLINATION NECESSITATED BY THE ANGLE OF THE CROSSING.

THE HORIZONTAL DIMENSIONS APPEARING IN THE ELEVATION DRAWINGS ARE THOSE OBTAINING IN THE CENTRE OF THE CHAIR, EXCEPTING IN THE CASE OF THE A CHAIRS, WHICH LATTER ARE TAKEN NOT AT THE CENTRE OF THE CHAIR, BUT AT THE POINT OF THE CROSSING.

THE HOLES IN THE CHAIR BASES TO TAKE THE STANDARD FERRULE AND SCREW.

THE NUMBER OF THE CROSSING TO BE CAST ON EACH SPECIAL CHAIR IN FRONT OF THE CHAIR LETTER, TO INDICATE FOR WHICH ANGLE OF CROSSING IT HAS BEEN DESIGNED. THE DATE OF MANUFACTURE, MAKERS INITIALS, AND WEIGHT OF RAIL DESIGNED FOR, ARE ALSO TO BE CAST ON EACH CHAIR.

DETAILS OF C.I. BRACKET
BUILT UP A. CHAIRS.

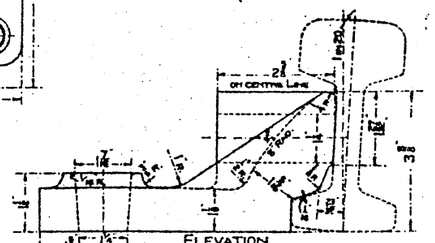

ELEVATION.

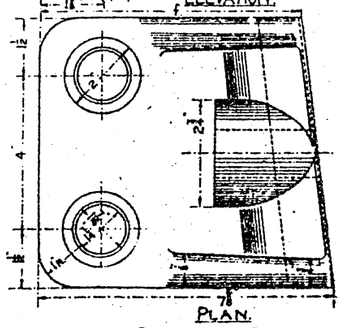

PLAN.

— QUARTER FULL SIZE. —

SCALE:- 1½ INCHES = 1 FOOT.

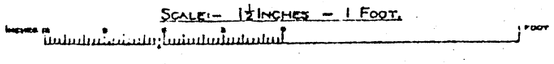

STANDARD RAILWAY EQUIPMENT — PERMANENT WAY. Nº 83A

CHAIRS FOR COMMON AND OBTUSE ANGLE CROSSINGS 1 IN 1½ TO 1 IN 3½.

85 R. B.S. RAIL.

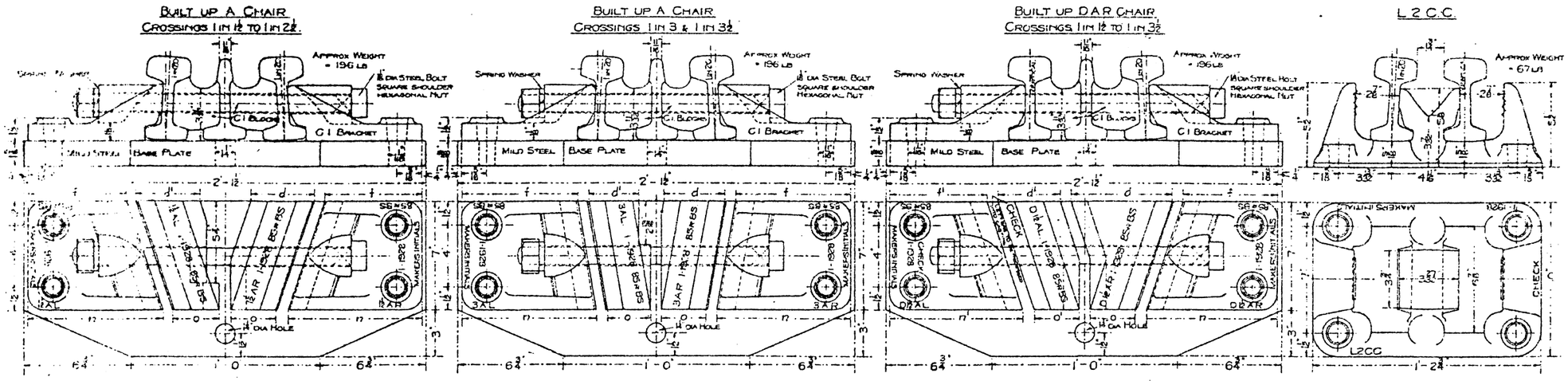

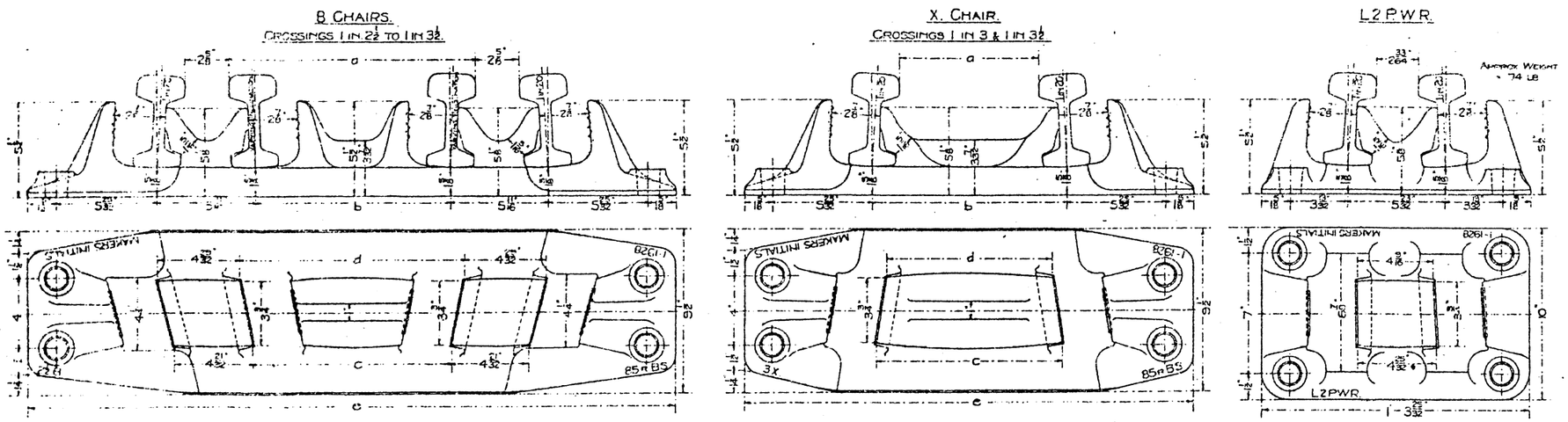

DIMENSIONS OF BUILT UP A CHAIRS

CROSSING	n	o	d	f	d'
1 in 1½	8 1/4	3"	4 15/16	6 3/32	4 31/32
1 in 2	8 7/32	2 29/32	5 1/8	6 11/32	3 29/32
1 in 2½	8 5/32	2 1/8	3 13/16	7 1/8	3 29/32
1 in 3	8 1/32	2 1/8	3 1/8	7 1/8	3 27/32
1 in 3½	8 1/8	2 5/32	3 1/8	7 1/8	3 27/32

DIMENSIONS OF B CHAIRS

CROSSING	a	b	c	d	e	APPROX WEIGHT	VARYING INCLINATION
1 in 2½	1-2 3/32	11 3/16	11 3/32	1-0 25/32	3-1 3/8	181 LB	1 in 44
1 in 3	11 25/64	8 29/32	9 3/8	10 7/8	2-11 25/32	170 LB	1 in 47
1 in 3½	10 1/4	7 7/8	7 21/32	8 3/4	2-9 5/8	163 LB	1 in 51

DIMENSIONS OF BUILT UP D.A.R. CHAIRS.

CROSSING	n	o	n'	o'	f	d'	f'	d
1 in 1½	8 5/8	3"	8 7/32	2 29/32	6 3/32	3 29/32	6 3/8	6 3/8
1 in 2	8 11/32	2 29/32	8 9/32	2 29/32	6 29/32	3 5/8	6 27/32	5 3/8
1 in 2½	8 3/8	2 5/8	8 13/32	2 29/32	7 1/8	3 29/32	7 1/8	4 5/8
1 in 3	8 3/32	2 5/8	8 1/8	2 29/32	7 1/8	3 29/32	7 1/8	4 5/8
1 in 3½	8 1/8	2 5/32	8 1/8	2 29/32	7 1/8	3 29/32	7 1/8	3 29/32

DIMENSIONS OF X CHAIRS

CROSSING	a	b	c	d	e	APPROX WEIGHT
1 in 3	8 3/4	11 3/32	10 3/8	9 11/16	2'-2 3/32	106 LB
1 in 3½	6 1/8	10 5/16	9 3/8	8 1/2	2-0 5/8	102 LB

SCALE - 1½ INCHES = 1 FOOT

INCHES 12 9 6 3 0 1 FOOT

NOTES

THE RAIL JAW OF ALL CROSSING CHAIRS TO CONFORM TO THE PROFILE OF THE RAIL JAW OF THE S2 CHAIR (DRAWING Nº 52) SUBJECT HOWEVER, TO THE ESSENTIAL DIFFERENCE IN THE HORIZONTAL INCLINATION NECESSITATED BY THE ANGLE OF THE CROSSING.

THE DETAILS OF THE KEY JAW ARE SHEWN ON DRAWING Nº 85 AND THIS DRAWING IS TYPICAL OF KEY JAWS FOR ALL CROSSING CHAIRS, SUBJECT TO THE ESSENTIAL DIFFERENCE IN THE HORIZONTAL INCLINATION NECESSITATED BY THE ANGLE OF THE CROSSING.

THE JAWS OF THE L 2 C.C AND THE L 2.P.W.R CHAIRS TO CONFORM TO THE PROFILE OF THE JAWS OF THE L 2 CHAIR (DRAWING Nº 53) SUBJECT TO THE ESSENTIAL DIFFERENCE IN THE HORIZONTAL INCLINATION NECESSITATED BY THE ANGLE OF THE WING RAIL WITH THE CROSSING IN THE CASE OF THE L 2.P.W.R.

THE DETAILS OF THE C I BRACKETS FOR THE BUILT UP A CHAIR ARE SHEWN ON DRAWING Nº 83 AND THIS DRAWING IS TYPICAL OF THE BRACKETS FOR ALL CROSSINGS EXCEPTING THE LENGTH AND SUBJECT ALSO TO THE ESSENTIAL DIFFERENCE IN THE HORIZONTAL INCLINATION NECESSITATED BY THE ANGLE OF THE CROSSING.

THE HORIZONTAL DIMENSIONS APPEARING IN THE ELEVATION DRAWINGS ARE THOSE OBTAINING IN THE CENTRE OF THE CHAIR, EXCEPTING IN THE CASE OF THE A CHAIRS WHICH LATTER ARE TAKEN NOT AT THE CENTRE OF THE CHAIR BUT AT THE POINT OF THE CROSSING.

THE DIMENSIONS SHEWN ON THE DRAWINGS FOR THE RIGHT HAND CHAIRS APPLY ALSO TO THE CORRESPONDING LEFT HAND CHAIRS.

THE HOLES IN THE CHAIR BASES TO TAKE THE STANDARD FERRULE AND SCREW.

THE NUMBER OF THE CROSSING TO BE CAST ON EACH SPECIAL CHAIR, IN FRONT OF THE CHAIR LETTER AND THE LETTER R OR L AFTER THE CHAIR LETTER, TO INDICATE FOR WHICH ANGLE OF CROSSING AND WHETHER RIGHT OR LEFT HAND, IT HAS BEEN DESIGNED. THE DATE OF MANUFACTURE, MAKERS INITIALS AND WEIGHT OF RAIL DESIGNED FOR ARE ALSO TO BE CAST ON EACH CHAIR.

THIS DRAWING IN CONJUNCTION WITH THE DIMENSIONAL TABLES AND ALSO THE NOTES ABOVE: DEPICTS ALL INFORMATION REQUISITE FOR THE MANUFACTURE OF SPECIAL CHAIRS REQUIRED FOR COMMON AND OBTUSE ANGLE CROSSINGS 1 IN 1½ TO 1 IN 3½ INCLUSIVE.

STANDARD RAILWAY EQUIPMENT – PERMANENT WAY.

No. 84.

CHAIRS FOR COMMON CROSSINGS.

85 R. B.S. RAIL.

C. CHAIR.
CROSSINGS 1 IN 4½ TO 1 IN 6½.

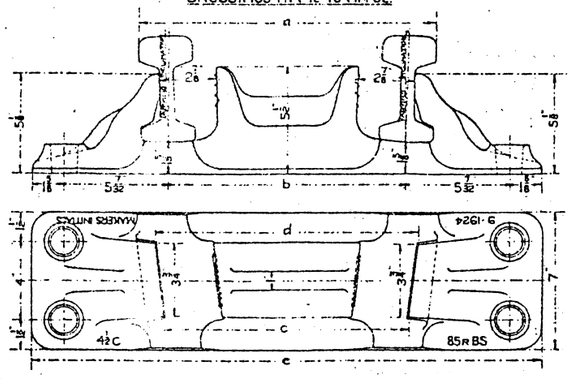

C. CHAIR.
CROSSINGS 1 IN 7 TO 1 IN 10.

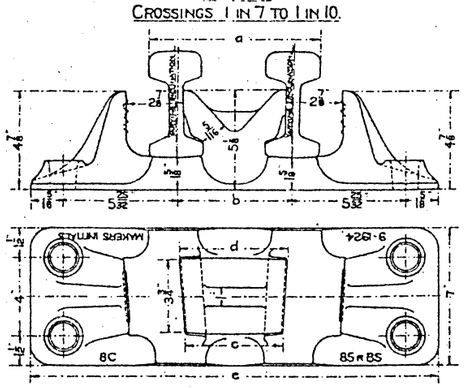

C. CHAIR.
CROSSINGS 1 IN 12 AND 1 IN 16.

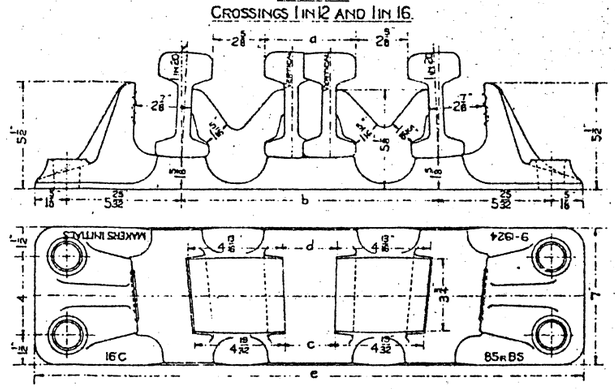

D. CHAIR.
CROSSINGS 1 IN 7 TO 1 IN 9.

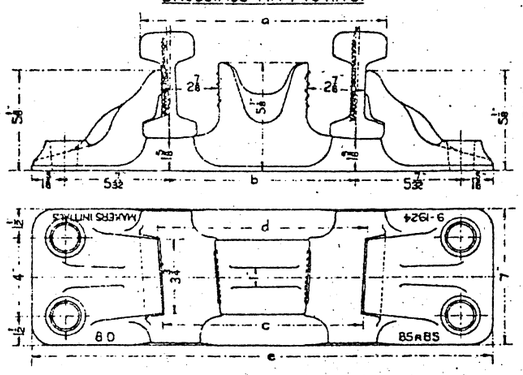

D. CHAIR
CROSSINGS 1 IN 10 TO 1 IN 16.

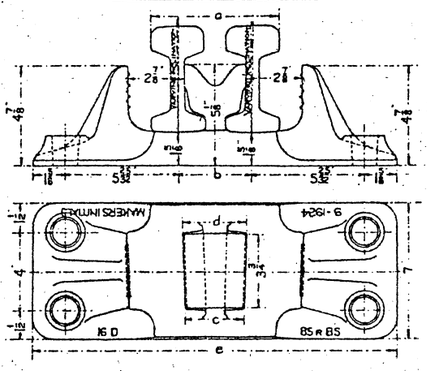

E AND F CHAIRS.
CROSSING 1 IN 16.

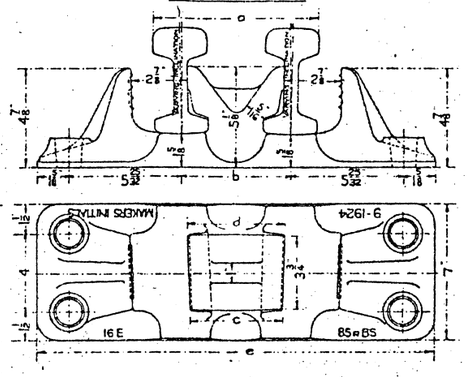

X. CHAIR.
CROSSINGS 1 IN 4 TO 1 IN 5½.

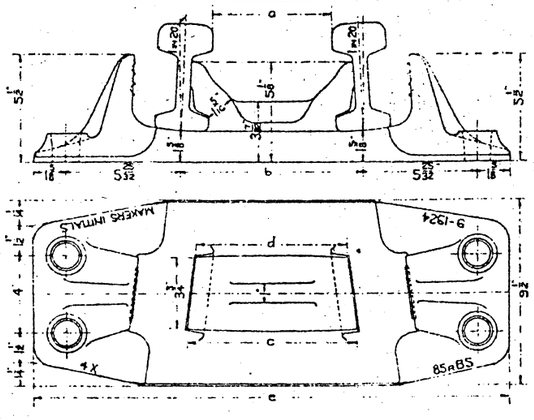

X. CHAIR.
CROSSINGS 1 IN 6 TO 1 IN 7.

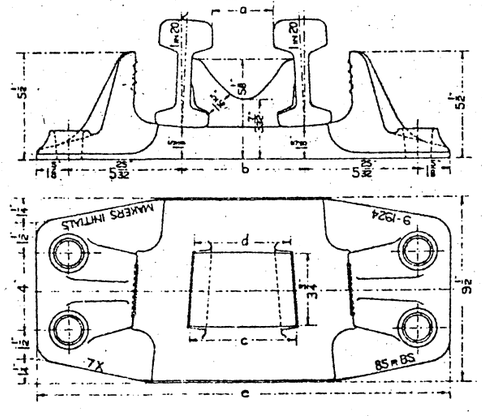

DIMENSIONS OF C. CHAIRS.

Crossing.	a	b	c	d	e	Approx Weight	Varying Inclination
1 in 4½	1 2 51/64	11 9/16	1 0 9/32	1 1/16	2 1 1/2	83 lb	1 in 35
1 in 5	1 1 25/64	10 13/32	10 29/32	11 21/32	2 0 3/32	81	1 in 33
1 in 5½	1 0 13/64	9 1/4	9 25/32	10 5/16	1 10 19/64	79	1 in 34
1 in 6	11 9/32	8 3/16	8 7/8	9 7/8	1 10	77	1 in 35
1 in 6½	10 29/64	7 1/2	8 1/16	8 5/8	1 9 3/8	75	1 in 16
1 in 7	9 49/64	6 23/32	6 1/16	6 19/32	1 9 23/32	74	1 in 57
1 in 7½	9 5/32	6 3/16	5 15/32	5 31/32	1 9 1/8	72	1 in 60
1 in 8	8 5/8	5 23/32	4 31/32	5 7/16	1 8 19/32	70	1 in 64
1 in 9	7 3/4	4 31/32	4 1/8	4 17/32	1 7 25/32	68	1 in 101
1 in 10	7 1/32	4 1/4	3 7/16	3 13/16	1 7 1/16	65	1 in 124
1 in 12	5 63/64	1 2 13/32	3 27/32	4 5/32	2 5 7/32	105	
1 in 16	4 21/32	1 1 3/32	2 17/32	2 25/32	2 3 29/32	101	

DIMENSIONS OF D. CHAIRS.

Crossing.	a	b	c	d	e	Approx Weight	Varying Inclination
1 in 7	1 2 4/64	11 1/32	11 11/16	1 0 7/32	2 0 21/32	80 lb	1 in 29
1 in 7½	1 1 5/32	10 1/8	10 13/16	11 5/16	1 11 13/16	77 -	1 in 29
1 in 8	1 0 1/8	9 11/32	10 3/32	10 1/2	1 11 5/32	74 -	1 in 30
1 in 9	11 5/64	8 5/32	8 3/16	9 7/32	1 9 27/32	71 -	1 in 42
1 in 10	10 1/32	7 1/4	6 13/32	6 31/32	1 9 5/16	68 -	1 in 44
1 in 12	8 31/64	5 21/32	4 29/32	5 7/32	1 8 15/32	65 -	1 in 66
1 in 16	6 17/32	3 3/4	3	3 7/32	1 6 9/16	61 -	1 in 114

DIMENSIONS OF E CHAIRS 1 IN 9 TO 1 IN 12; F 1 IN 21, G 1 IN 16 CROSSINGS.
(SEE DRAWING FOR D CHAIRS; CROSSINGS 1 IN 7 TO 1 IN 9.)

Crossing	Chair	a	b	c	d	e	Approx Weight	Varying Inclination
1 in 9	E	1 2 13/32	11 11/32	1 0 3/32	1 0 1/8	2 1 1/32	83 lb	1 in 27
1 in 10	E	1 1 1/32	9 31/32	10 3/4	11 1/8	1 11 21/32	77 -	1 in 27
1 in 12	E	10 63/64	8 1/32	8 3/4	9 1/16	1 9 29/32	71 -	1 in 37
1 in 12	F	1 1 31/64	10 13/32	11 7/32	11 17/32	2 0 3/32	79 -	1 in 25
1 in 16	G	1 0 9/32	8 3/8	9 13/32	10 1/8	1 10 21/32	72 -	1 in 20

DIMENSIONS OF E & F CHAIRS 1 IN 16 CROSSING

Chair	a	b	c	d	e	Approx Weight	Varying Inclination
E	8 13/32	5 1/2	4 27/32	5 1/16	1 8 5/16	68 lb	1 in 43
F	10 9/32	7 7/32	6 11/16	6 29/32	1 10 3/32	71 -	1 in 27

DIMENSIONS OF X. CHAIRS 1 IN 4 TO 1 IN 7 CROSSINGS

Crossing.	a	b	c	d	e	Approx Weight
1 in 4	5 5/16	9 1/8	8 9/16	7 1/8	1 11 15/16	99 lb
1 in 4½	5 13/64	8 1/8	7 3/4	6 25/32	1 11 3/16	97 -
1 in 5	4 25/64	7 13/16	7 1/8	6 1/8	1 - 10 1/8	95 -
1 in 5½	4 1/8	7 5/16	6 13/32	5 29/32	1 - 10 1/4	93
1 in 6	3 47/64	6 29/32	6 3/16	5 9/16	1 - 9 23/32	90 -
1 in 6½	3 25/64	6 9/16	5 13/16	5 1/4	1 9 3/16	88 -
1 in 7	3 3/32	6 3/32	5 1/2	4 31/32	1 9 3/32	86 -

NOTES

THE RAIL JAW OF ALL CROSSING CHAIRS TO CONFORM TO THE PROFILE OF THE RAIL JAW OF THE S.2. CHAIR (DRAWING Nº 52), SUBJECT, HOWEVER TO THE ESSENTIAL DIFFERENCE IN THE HORIZONTAL INCLINATION NECESSITATED BY THE ANGLE OF THE CROSSING.

THE DETAILS OF THE KEY JAW ARE SHOWN ON DRAWING Nº 85 AND THIS DRAWING IS TYPICAL OF KEY JAWS FOR ALL CROSSING CHAIRS SUBJECT TO THE ESSENTIAL DIFFERENCE IN THE HORIZONTAL INCLINATION NECESSITATED BY THE ANGLE OF THE CROSSING AND SUBJECT ALSO TO THE HEIGHT BEING 4⅞ INSTEAD OF 5½ IN THE CASE OF THE FOLLOWING CHAIRS:–

C CHAIRS FOR CROSSINGS 1 IN 7 TO 1 IN 10.
D CHAIRS FOR CROSSINGS 1 IN 10 TO 1 IN 16
E AND F CHAIRS FOR CROSSING 1 IN 16.

THE HORIZONTAL DIMENSIONS APPEARING IN THE ELEVATION DRAWINGS ARE THOSE OBTAINING IN THE CENTRE OF THE CHAIR

THE HOLES IN THE CHAIR BASES TO TAKE THE STANDARD FERRULE AND SCREW

THE NUMBER OF THE CROSSING TO BE CAST ON EACH SPECIAL CHAIR IN FRONT OF THE CHAIR LETTER TO INDICATE FOR WHICH ANGLE OF CROSSING IT HAS BEEN DESIGNED. THE DATE OF MANUFACTURE, MAKERS INITIALS AND WEIGHT OF RAIL DESIGNED FOR ARE ALSO TO BE CAST ON EACH CHAIR.

SCALE: 1½ INCHES = 1 FOOT.

STANDARD RAILWAY EQUIPMENT — PERMANENT WAY.

Nº 85.

CHAIRS FOR COMMON CROSSINGS.

85 R. B.S. RAIL.

X. CHAIR.
CROSSINGS 1 IN 7½ TO 1 IN 12.

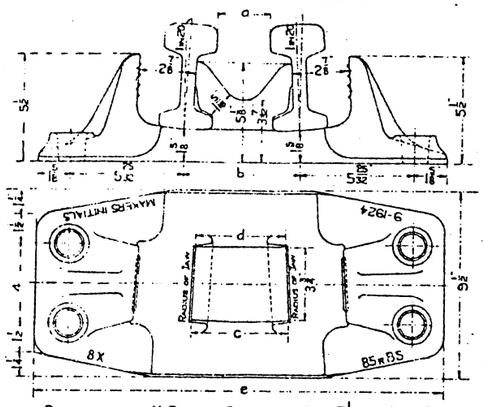

X. CHAIR.
CROSSING 1 IN 16.

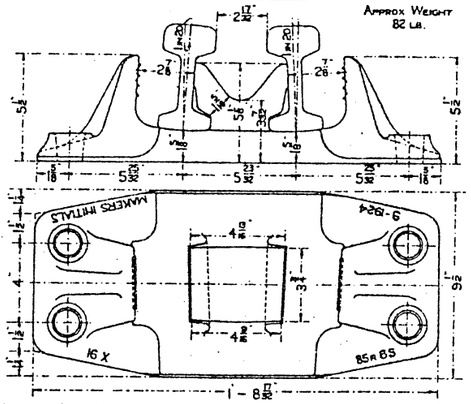

Y. CHAIR.
CROSSINGS 1 IN 7 TO 1 IN 12.

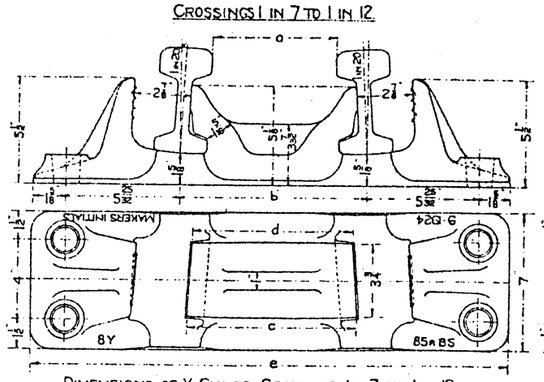

Y. CHAIR
CROSSING 1 IN 16

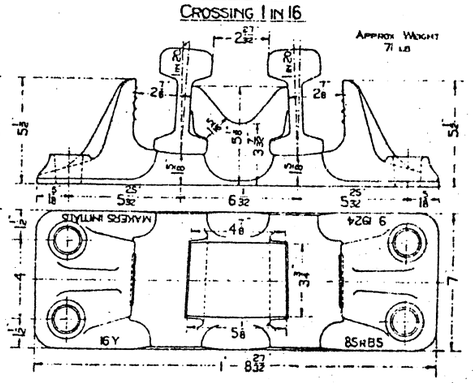

DIMENSIONS OF X CHAIRS CROSSINGS 1 IN 7½ TO 1 IN 12.

CROSSING	a	b	c	d	e	APPROX. WEIGHT.	RADII OF JAWS.
1 IN 7½	2 27/32"	6 1/32"	5 1/4"	4 3/4"	1'-8 25/32"	85 LB	10'-0"
1 IN 8	2 5/8"	5 13/16"	5"	4 29/32"	1'-8 5/8"	83 ·	10'-8"
1 IN 9	2 11/32"	5 17/32"	4 5/8"	4 13/32"	1'-8 11/16"	82 ·	12'-0"
1 IN 10	2 3/16"	5 3/8"	4 13/32"	4 3/16"	1'-8 3/16"	81 ·	13'-4"
1 IN 12	2 1/8"	5 3/16"	4 1/4"	4 1/32"	1'-8 1/8"	81	16'-0"

DIMENSIONS OF Z CHAIR CROSSING 1 IN 12, ALSO Z & Z' CHAIRS CROSSING 1 IN 16.

(SEE DRAWING FOR Y CHAIRS CROSSINGS 1 IN 7 TO 1 IN 12.)

CROSSING.	CHAIR.	a	b	c	d	e	APPROX. WEIGHT.
1 IN 12	Z	6 33/64"	9 21/32"	8 13/16"	8 1/8"	2'-0 17/32"	80 LB.
1 IN 16	Z	4 23/32"	7 29/32"	7	6 3/4"	1'-10 21/32"	75 ·
1 IN 16	Z'	6 15/32"	9 21/32"	8 7/8"	8 5/8"	2'-0 19/32"	80 ·

DIMENSIONS OF Y CHAIRS CROSSINGS 1 IN 7 TO 1 IN 12.

CROSSING.	a	b	c.	d	e	APPROX. WEIGHT
1 IN 7	7 25/64"	10 9/16"	9 25/32"	9 1/4"	2'-1 3/16"	84 LB
1 IN 7½	6 27/32"	10 1/32"	9 1/4"	8 3/4"	2'-0 27/32"	82 ·
1 IN 8	6 3/8"	9 9/16"	8 3/4"	8 9/32"	2'-0 3/8"	80 ·
1 IN 9	5 29/32"	8 25/32"	7 15/16"	7 17/32"	1'-11 19/32"	78 ·
1 IN 10	4 31/32"	8 3/32"	7 9/32"	6 29/32"	1'-10 31/32"	76 ·
1 IN 12	4 1/64"	7 7/32"	6 5/8"	6"	1'-10 1/32"	74 ·

DETAILS OF KEY JAW.
QUARTER FULL SIZE.

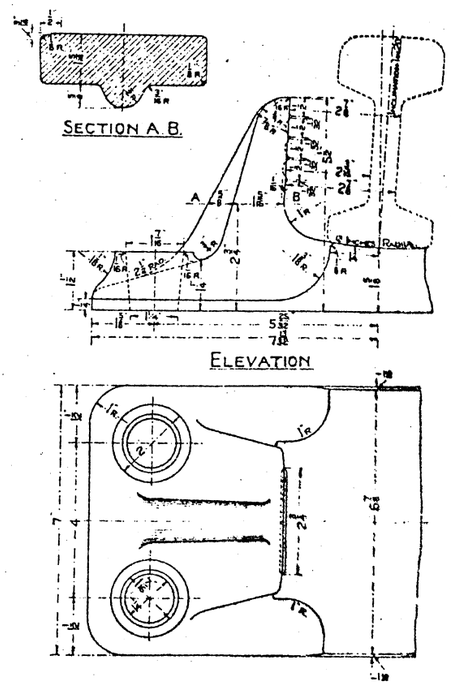

C.C.R

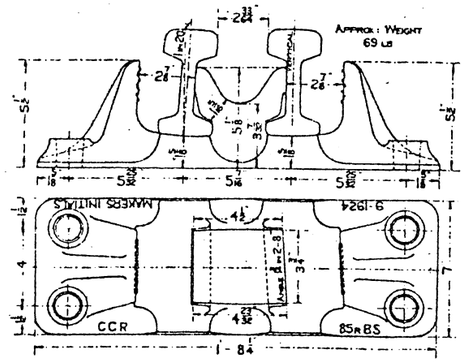

CC

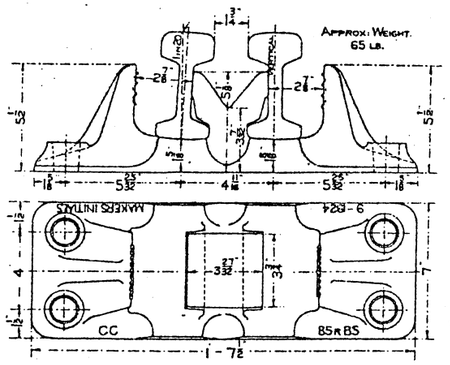

C.C.L

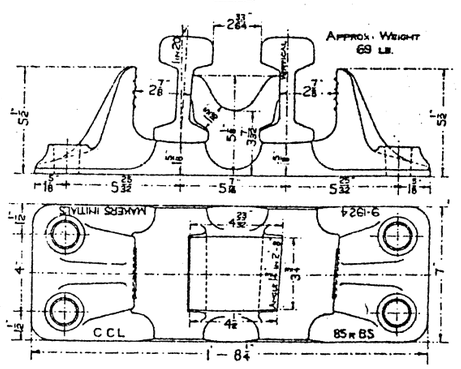

NOTES.

THE RAIL JAW OF ALL CROSSING CHAIRS TO CONFORM TO THE PROFILE OF THE RAIL JAW OF THE S.2. CHAIR (DRAWING Nº 52) SUBJECT, HOWEVER, TO THE ESSENTIAL DIFFERENCE IN THE HORIZONTAL INCLINATION NECESSITATED BY THE ANGLE OF THE CROSSING

THE DETAILS OF THE KEY JAW ARE SHOWN ON THIS DRAWING AND THIS DRAWING IS TYPICAL OF KEY JAWS FOR ALL CROSSING CHAIRS, SUBJECT TO THE ESSENTIAL DIFFERENCE IN THE HORIZONTAL INCLINATION NECESSITATED BY THE ANGLE OF THE CROSSING

THE HORIZONTAL DIMENSIONS APPEARING IN THE ELEVATION DRAWINGS ARE THOSE OBTAINING IN THE CENTRE OF THE CHAIR

THE HOLES IN THE CHAIR BASES TO TAKE THE STANDARD FERRULE AND SCREW.

THE NUMBER OF THE CROSSING TO BE CAST ON EACH SPECIAL CHAIR IN FRONT OF THE CHAIR LETTER, TO INDICATE FOR WHICH ANGLE OF CROSSING IT HAS BEEN DESIGNED. THE DATE OF MANUFACTURE, MAKERS INITIALS AND WEIGHT OF RAIL DESIGNED FOR, ARE ALSO TO BE CAST ON EACH SPECIAL CHAIR

SCALE:- 1½ INCHES = 1 FOOT

INCHES 12 9 6 3 0 1 FOOT

COMMON CROSSING CHAIRS TO TAKE PARALLEL WING RAILS.

85R. B. S. RAIL.

B CHAIR.
CROSSINGS 1 IN 4 TO 1 IN 5.

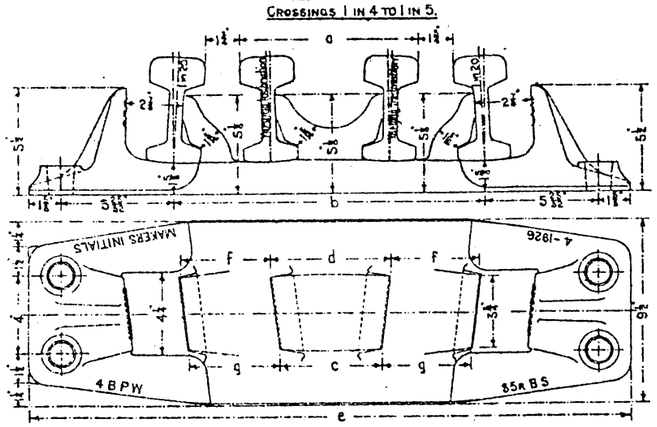

B CHAIR.
CROSSINGS 1 IN 5½ TO 1 IN 10.

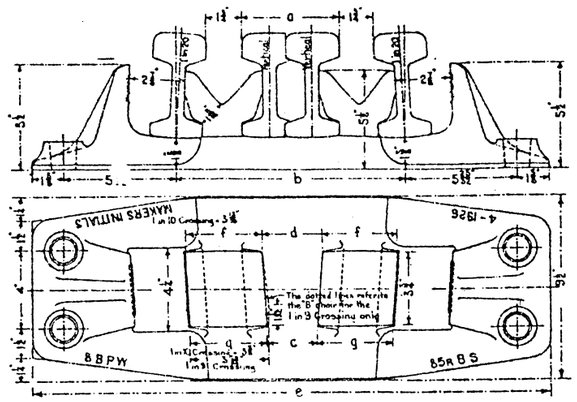

L.2.P.W.

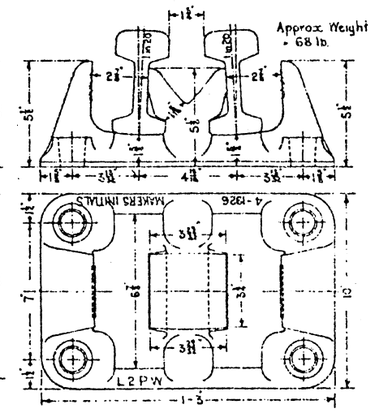

P.W.

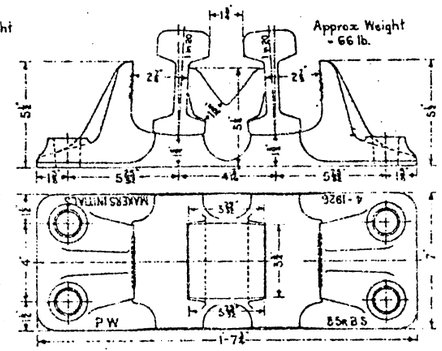

C CHAIR.
CROSSINGS 1 IN 7 TO 1 IN 10.

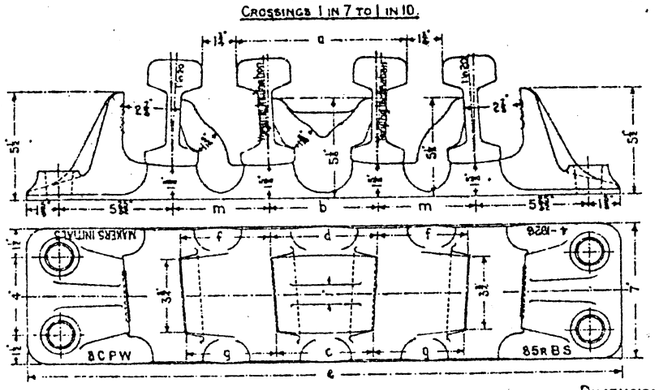

C CHAIR.
CROSSINGS 1 IN 12 & 1 IN 16.

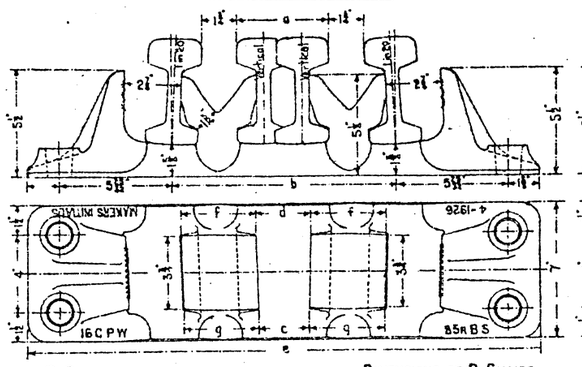

D CHAIR.
CROSSINGS 1 IN 7 TO 1 IN 9.

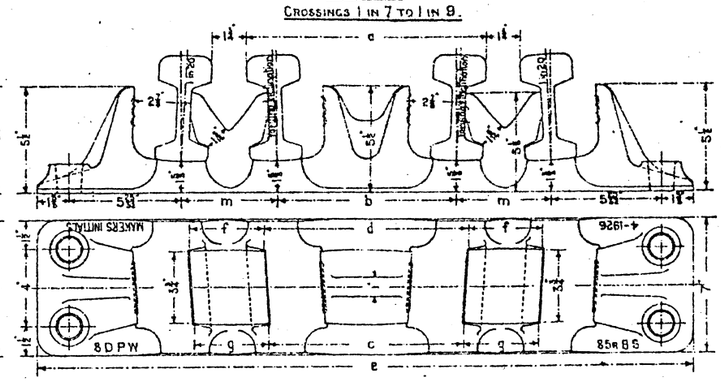

P.W.R.

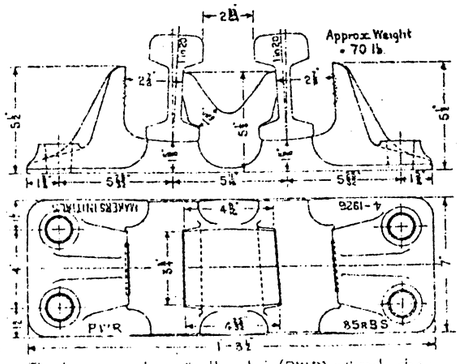

The dimensions shewn for this chair (P.W.R.) will apply also to the corresponding left hand chair (P.W.L.)

DIMENSIONS OF B CHAIRS.

Crossing	a	b	c	d	f & g	e	Approx. Weight	Varying Inclination
1 in 4	9¼	1-3½	5⅝	6⅝	4⅝	2-6¾	135 lb.	1 in 56
1 in 4½	8⅞	1-2⅞	4¾	5⅝	4¼	2-5¾	130 "	1 in 112
1 in 5	7 15/16	1-2⅝	3⅞	4 15/16	4¼	2-4 15/16	126 "	1 in 134
1 in 5½	6 15/16	1-1¾	4¼	5¼	3 15/16	2-4¼	123 "	—
1 in 6	6¼	1-1	3 15/16	4 15/16	3 15/16	2-3 15/16	120 "	—
1 in 6½	5 15/16	1-0 15/16	3¾	4¼	3 15/16	2-3½	117 "	—
1 in 7	5 15/16	1-0⅜	3⅝	3¾	3 15/16	2-2⅞	115 "	—
1 in 7½	5¾	11 15/16	2 15/16	3 15/16	3 15/16	2-2⅝	113 "	—
1 in 8	4¾	11¾	2¾	3¼	3 15/16	2-2¼	111 "	—
1 in 9	4 15/16	11⅜	2¼	2¾	3 15/16	2-1 15/16	109 "	—
1 in 10	4⅝	10 15/16	2⅛	2⅝	3 15/16	2-1⅝	108 "	—

DIMENSIONS OF C CHAIRS.

Crossing	a	b	c	d	f & g	m	e	Approx. Weight	Varying Inclination
1 in 7	9¼	6 15/16	6¼	6 15/16	4¼	4 15/16	2-7¾	112 lb.	1 in 57
1 in 7½	9⅛	6⅝	5 15/16	5 15/16	4¼	4 15/16	2-6¾	109 "	1 in 60
1 in 8	8¾	5 15/16	4 15/16	5¼	4¼	4¼	2-6⅛	107 "	1 in 64
1 in 9	7¾	4 15/16	4¼	4 15/16	4 15/16	4¼	2-5 15/16	105 "	1 in 101
1 in 10	7⅛	4¼	3¾	4 15/16	4 15/16	4 15/16	2-4¾	103 "	1 in 124
1 in 12	5¾	11-0¼	3 15/16	4⅛	3 15/16	—	2-3¾	101 "	—
1 in 16	4 15/16	11⅛	2 15/16	3 15/16	3 15/16	—	2-2⅝	99 "	—
See Drawing for D Chairs, Crossings 1 in 7 to 1 in 9.									
1 in 4½	1-2¼	11¾	1-0⅜	1-1	3¾	4 15/16	3-0¼	135 lb.	1 in 53
1 in 5	1-1¼	10⅝	10 15/16	11 15/16	3¾	4 15/16	2-10 15/16	131 "	1 in 53
1 in 5½	1-0¼	9¾	9 15/16	10 15/16	3¾	4 15/16	2-9¾	128 "	1 in 34
1 in 6	11⅝	8¾	8¾	9 15/16	3¾	4 15/16	2-8¾	125 "	1 in 55
1 in 6½	10 15/16	7¾	8¼	8¾	3¾	4 15/16	2-8	122 "	1 in 36

DIMENSIONS OF D CHAIRS.

Crossing	a	b	c	d	f & g	m	e	Approx. Weight	Varying Inclination
1 in 7	1-2¼	11⅝	11¼	1-0⅛	3¾	4 15/16	2-11 15/16	133 lb.	1 in 29
1 in 7½	1-1⅛	10¾	10 15/16	11⅞	3¾	4 15/16	2-10⅞	130 "	1 in 29
1 in 8	1-0⅛	9 15/16	10⅝	10¾	3¾	4 15/16	2-9 15/16	128 "	1 in 30
1 in 9	11¼	8⅝	8 15/16	9⅝	3¾	4 15/16	2-8⅝	124 "	1 in 42
See Drawing for C Chairs, Crossings 1 in 7 to 1 in 10.									
1 in 10	10 15/16	7⅛	6 15/16	6 15/16	4¼	4 15/16	2-7¾	113 lb.	1 in 44
1 in 12	8 15/16	5 15/16	4 15/16	5 15/16	4 15/16	4¼	2-5 15/16	107 "	1 in 66
1 in 16	6⅝	3¾	3"	3¾	4 15/16	4¼	2-4¼	102 "	1 in 114

DIMENSIONS OF E CHAIRS.
SEE DRAWING FOR D CHAIRS, CROSSINGS 1 IN 7 TO 1 IN 9.

Crossing	a	b	c	d	f & g	m	e	Approx. Weight	Varying Inclination
1 in 9	1-2 15/16	11 15/16	1-0⅜	1-0⅞	3¾	4¼	2-11 15/16	134 lb.	1 in 27
1 in 10	1-1 15/16	9 15/16	10¼	11⅛	3¾	4⅛	2-10 15/16	130 "	1 in 27
1 in 12	10 15/16	8 15/16	8¾	9 15/16	3¾	4 15/16	2-8 15/16	124 "	1 in 37
See Drawing for C Chairs, Crossings 1 in 7 to 1 in 10.									
1 in 16	8 15/16	5¼	4 15/16	5 1/16	4¾	4 15/16	2-5¾	107 lb	1 in 43

DIMENSIONS OF F CHAIR 1 IN 12, F & G CHAIRS 1 IN 16, CROSSINGS.
SEE DRAWING FOR D CHAIRS, CROSSINGS 1 IN 7 TO 1 IN 9.

Crossing	Chair	a	b	c	d	f & g	m	e	Approx. Weight	Varying Inclination
1 in 12	F	1-1¾	10 15/16	11⅝	11 15/16	3¾	4¼	2-10¾	131 lb.	1 in 25
1 in 16	G	1-0⅜	8 15/16	9 15/16	10⅛	3 15/16	4⅛	2-9 15/16	128 "	1 in 20
See Drawing for C Chairs, Crossings 1 in 7 to 1 in 10.										
1 in 16	F	1	10⅝	7¼	6¼	6 15/16	4¼	4⅛	2-7 15/16	114 lb. 1 in 27

SCALE :- 1½ INCHES = 1 FOOT.

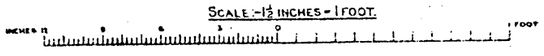

NOTES.

The dimensions shewn on the drawings are for common crossing chairs to take Double Parallel Wing Rails. The dimensions will also apply to chairs to take either Right or Left Hand Parallel Wing Rails and the dimensions appearing on Drawings Nos. 83 and 84 (chairs for common crossings) will be used in conjunction with those shewn on this Drawing, for the manufacture of these chairs.

The rail jaw of all crossing chairs to conform to the profile of the rail jaw of the S.2. chair (Drawing No. 52) subject however, to the essential difference in the horizontal inclination necessitated by the angle of the crossing.

The details of the key jaw are shewn on Drawing No. 85 and this drawing is typical of key jaws for all crossing chairs, subject to the essential difference in the horizontal inclination necessitated by the angle of the crossing

The jaws of the L.2.P.W. chair to conform to the profile of the jaws of the L.2 chair (Drwg No. 53)

The horizontal dimensions appearing in the elevation drawings are those obtaining in the centre of the chair.

The holes in the chair bases to take the standard ferrule and screw.

The number of the crossing to be cast on each special chair in front of the chair letter, with the letters P.W. added, to indicate for which angle of crossing it has been designed and also that it takes Double Parallel Wing Rails. In the case of chairs to take Right or Left Hand Parallel Wing Rails the letter R or L is to be cast after the P.W. The date of manufacture, makers initials and weight of rail designed for, are also to be cast on each chair.

STANDARD RAILWAY EQUIPMENT — PERMANENT WAY.

No. 86.

OBTUSE ANGLE CROSSING 1 IN 4.

85 R. B.S. RAIL.

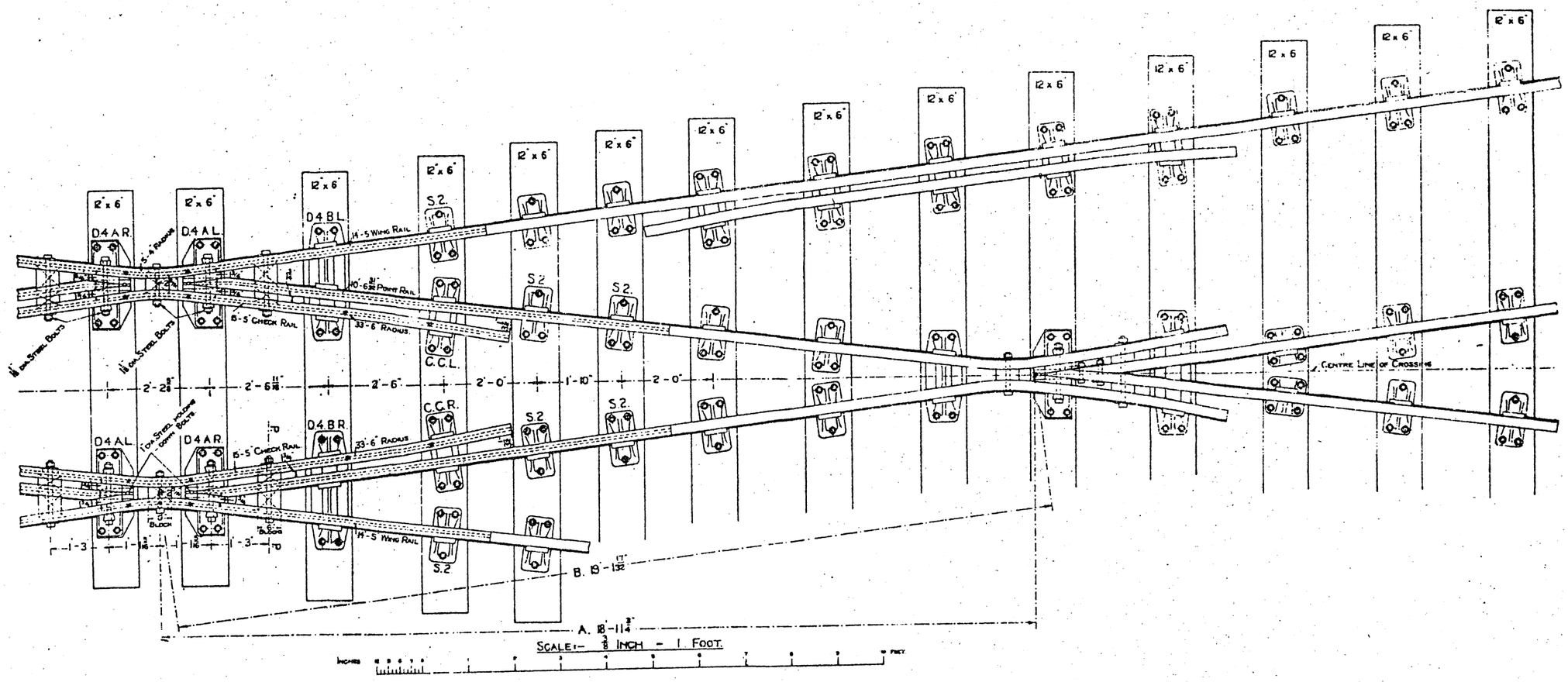

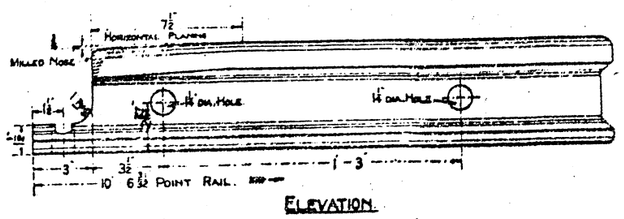

ELEVATION.

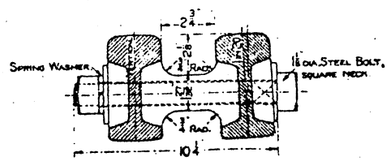

SECTION THROUGH NECK

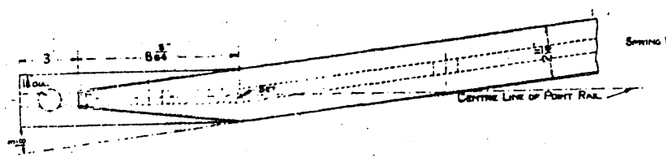

PLAN.

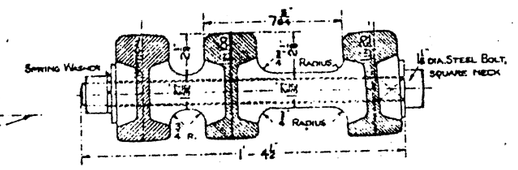

SECTION, P.P.

— DETAILS OF POINT RAIL —

Scale - 1 1/2 Inches - 1 Foot.

NOTES.

The lengths of the Point Rails shewn apply to the intersection of straight roads only. In the case of curved intersections the length of the Point Rails will require to be varied.

The Point Rail to be vertical from the nose to the set. From the latter point the Rail is to be gradually canted towards the running side until the full inclination of 1 in 20 from the vertical is reached at a distance of five feet back from the nose.

The Wing Rails to be canted towards the running side at an inclination of 1 in 20 from the vertical.

The Check Rails to be vertical.

All Bolts and Nuts to conform to the British Standard Specification No. 64 and to be fitted with Spring Washers.

The following Details applicable to all obtuse angle crossings appear on Drawing No. 90.

"Crossing nose before and after milling."
"Holding-down Bolt, Saddle and Washer Plate."
"C.I. Washers, also Chair Screw for built-up 'A' Chair fastenings."

For Details of obtuse angle crossing Chairs other than C.C.R., C.C.L., and S.2, see Drawing No. 91.

For Details of the C.C.R. and C.C.L. Chairs, see Drawing No. 85.

For Details of the S.2 Chair, see Drawing No. 52.

The angle of crossing in 1" figures to be stamped on the outside of the web of the Point and Wing Rails, 2' 4" from fishjoint end.

STANDARD RAILWAY EQUIPMENT — PERMANENT WAY.

OBTUSE ANGLE CROSSINGS 1 IN 4½ & 1 IN 5.

85 R. B.S. RAIL.

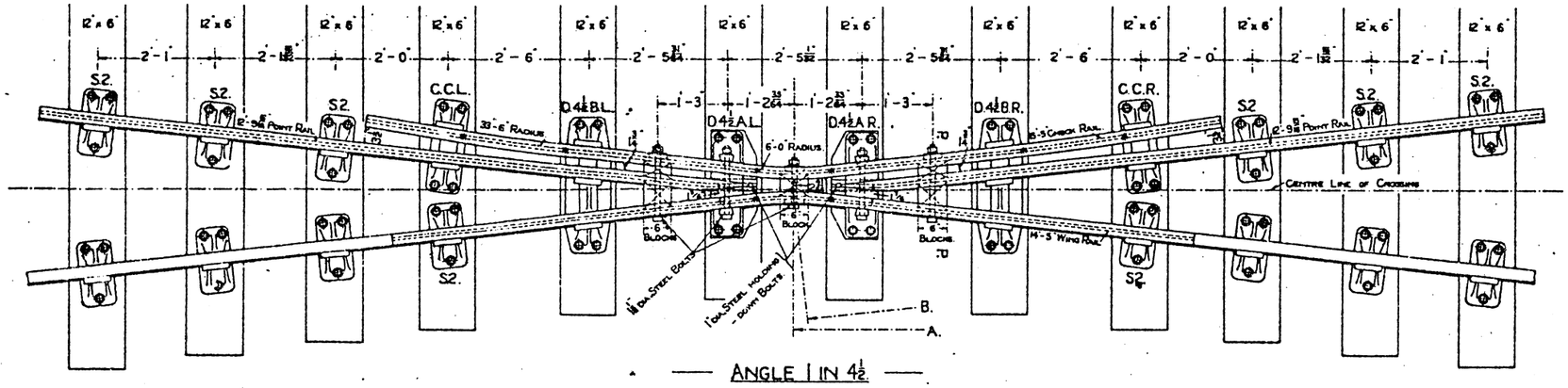

— ANGLE 1 IN 4½ —

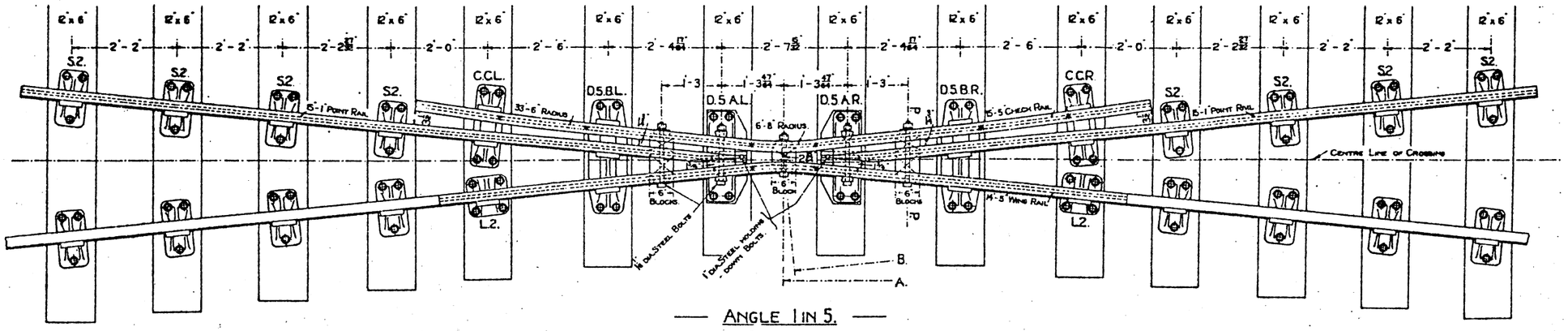

— ANGLE 1 IN 5. —

SCALE:- ⅜ INCH — 1 FOOT.

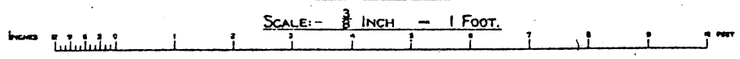

DIMENSIONS REFERRING TO DETAILS OF POINT RAILS & CROSS SECTIONS.

Angle of Crossing.	a	b	c	d	e	f	Varying Inclination.
1 in 4½	8 7/16"	9 5/64"	1 11/32"	12'-9 15/16"	2 41/64"	6 5/16"	1 in 108
1 in 5	9 3/8"	10 3/16"	1 15/64"	15'-1"	2 35/64"	6 3/64"	1 in 118

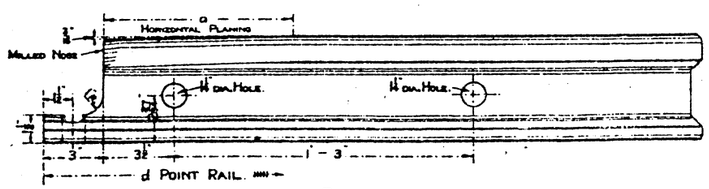

ELEVATION.

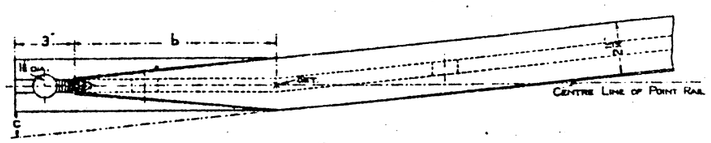

PLAN.

— DETAILS OF POINT RAIL. —

SCALE:- 1½ INCHES — 1 FOOT.

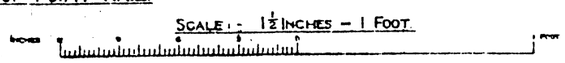

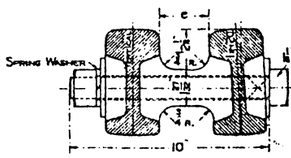

SECTION THROUGH NECK.

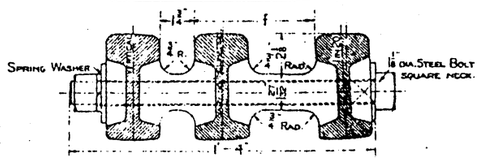

SECTION P.P.

NOTES.

The lengths of the Point Rails shewn apply to the intersection of straight roads only. In the case of curved intersections the length of the Point Rails will require to be varied.

The Point Rail to be vertical from the nose to the set. From the latter point the Rail is to be gradually canted towards the running side until the full inclination of 1 in 20 from the vertical is reached at a distance of five feet back from the nose.

The Wing Rails to be canted towards the running side at an inclination of 1 in 20 from the vertical.

The Check Rails to be vertical.

All Bolts and Nuts to conform to the British Standard Specification Nº 64 and to be fitted with Spring Washers.

The lengths of the Point Rails shewn on the drawings will join up to the Wing Rails of the common crossings.

The lengths A and B are shewn in the "Table of Intersection Lengths" on Drawing Nº 90.

The following Details applicable to all obtuse angle crossings appear on Drawing Nº 90.

"Crossing nose before and after milling."

"Holding-down Bolt, Saddle and Washer Plate."

"C.I. Washers, also Chair Screw for built-up 'A' Chair fastenings."

For Details of obtuse angle crossing Chairs other than C.C.R, C.C.L, S2 and L2, see Drawing Nº 91.

For Details of the C.C.R and C.C.L Chairs, see Drawing Nº 85.

For Details of the S2 Chair, see Drawing Nº 52.

For Details of the L2 Chair, see Drawing Nº 53.

The angle of crossing in 1" figures to be stamped on the outside of the web of the Point and Wing Rails, 2'-4" from fishjoint end.

STANDARD RAILWAY EQUIPMENT — PERMANENT WAY.

No. 88.

OBTUSE ANGLE CROSSINGS 1 IN 5½ & 1 IN 6.

85 R. B.S. RAIL.

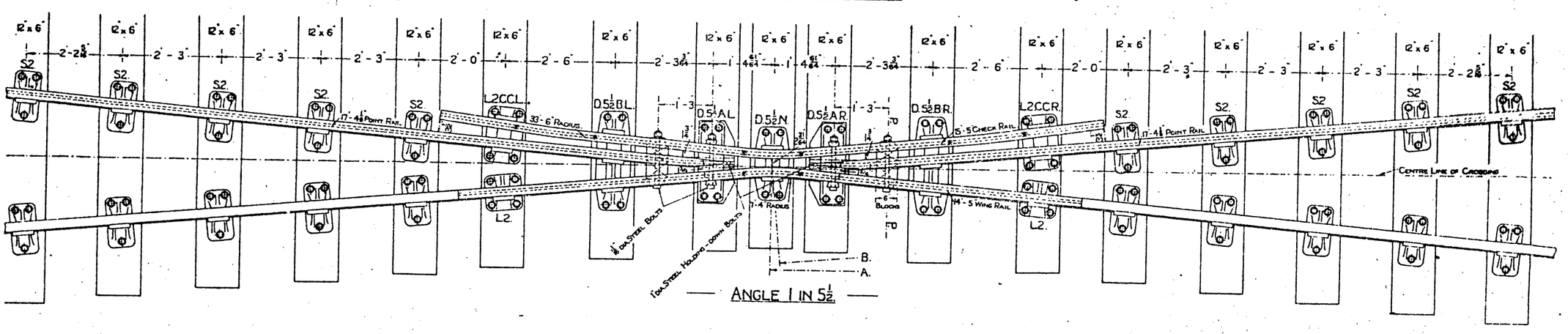

ANGLE 1 IN 5½

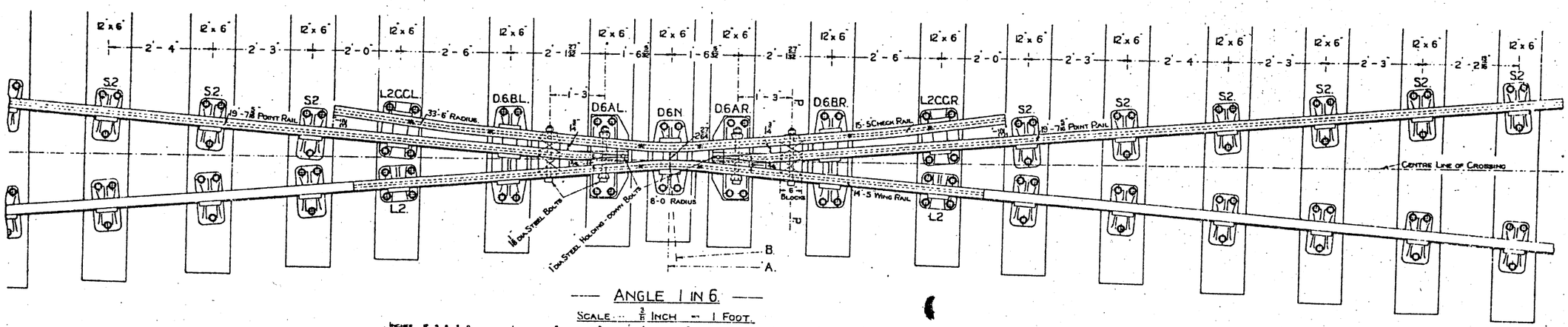

ANGLE 1 IN 6.

SCALE — $\frac{3}{16}$ INCH = 1 FOOT.

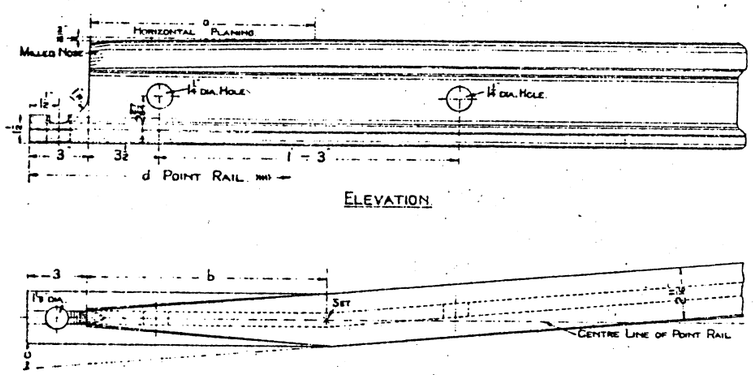

ELEVATION

PLAN

DIMENSIONS REFERRING TO DETAILS OF POINT RAIL & CROSS SECTIONS.

Angle of Crossing	a	b	c	d	f	Varying Inclination
1 in 5½	10⅝"	11⅛"	1 27/64"	17'-4½"	5 61/64"	1 in 124
1 in 6	11¼"	12⅝"	1¼"	19'-7⅞"	5 53/64"	1 in 139

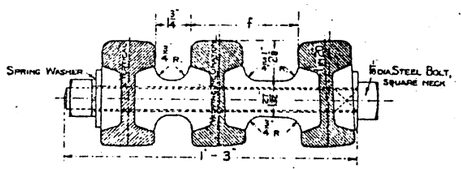

SECTION P.P.

DETAILS OF POINT RAIL.

SCALE — 1½ INCHES = 1 FOOT.

NOTES.

The lengths of the Point Rails shown apply to the intersection of straight roads only. In the case of curved intersections the length of the Point Rails will require to be varied.

The Point Rail to be vertical from the nose to the set. From the latter point this Rail is to be gradually canted towards the running side until the full inclination of 1 in 20 from the vertical is reached at a distance of four feet nine inches back from the nose.

The Wing Rails to be canted towards the running side at an inclination of 1 in 20 from the vertical.

The Check Rails to be vertical.

All Bolts and Nuts to conform to the British Standard Specification No. 64 and to be fitted with Spring Washers.

The lengths of the Point Rails shewn on the drawings will join up with the Wing Rails of the common crossings.

The "Lengths A and B are shewn in the "Table of Intersection Lengths" on Drawing No. 90.

The following Details applicable to all obtuse angle crossings appear on Drawing No. 90.

"Crossing nose before and after milling."
"Holding-down Bolt, saddle and Washer Plate."
"C.I. Washers, also Chair Screw for built-up "A" Chair fastenings."

For Details of obtuse angle crossing Chairs, see Drawing No. 91.

For Details of the S2. Chair, see Drawing No. 52.

For Details of the L2 Chair, see Drawing No. 53.

The angle of crossing in 1" figures to be stamped on the outside of the web of the Point and Wing Rails, 2'-4" from fishjoint end.

OBTUSE ANGLE CROSSINGS 1 IN 6½. 1 IN 7 & 1 IN 7½.

85 R. B.S. RAIL.

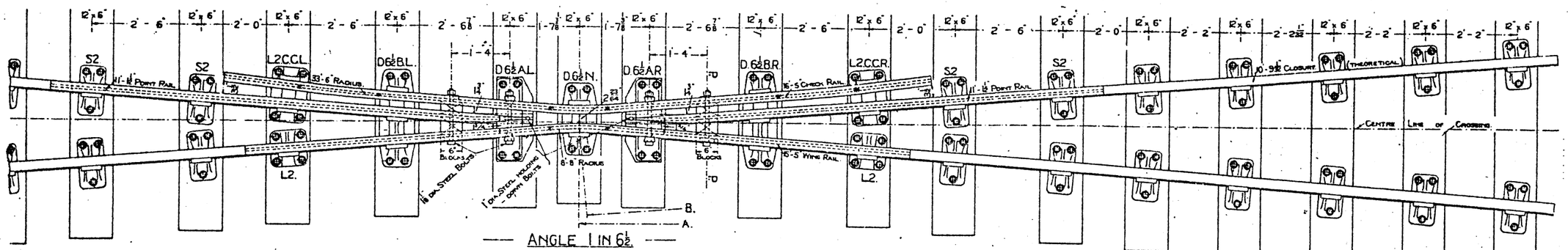

— Angle 1 in 6½ —

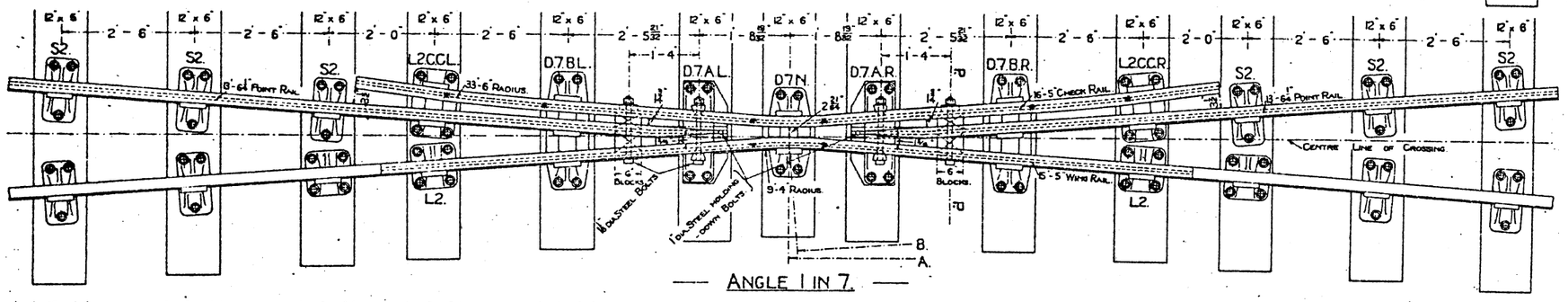

— Angle 1 in 7 —

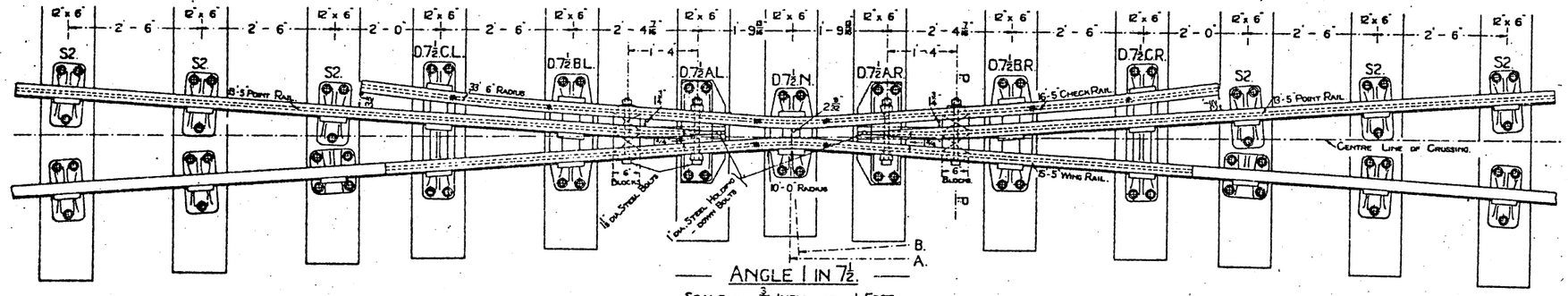

— Angle 1 in 7½ —

Scale:- ⅜ Inch — 1 Foot.

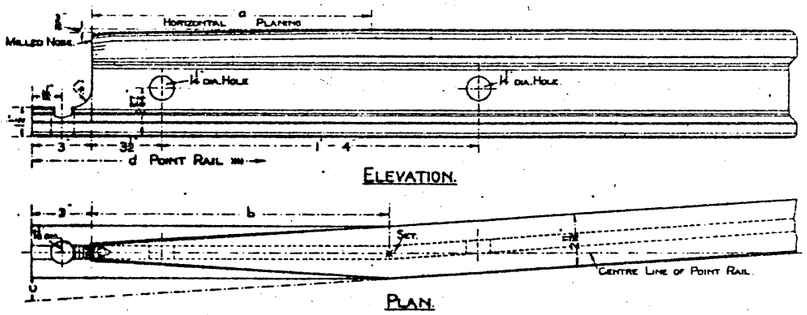

Dimensions referring to Details of Point Rail & Cross Section.

Angle of Crossing	a	b	c	d	f	Varying Inclination
1 in 6½	1'-0⅜"	1'-1½"	1 15/64"	11'-1½"	5 7/64"	1 in 146
1 in 7	1'-1⅛"	1'-2¼"	1 3/64"	13'-6¼"	5 15/64"	1 in 168
1 in 7½	1'-2⅛"	1'-3¼"	1 5/64"	13'-5"	5 5/64"	1 in 310

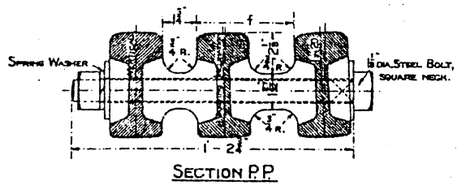

Section P.P.

— Details of Point Rail. —

Scale:- 1½ Inches — 1 Foot.

Notes.

The lengths of the Point Rails shewn apply to the intersection of straight roads only. In the case of curved intersections the length of the Point Rails will require to be varied.

The Point Rail to be vertical from the nose to the set. From the latter point the Rail is to be gradually canted towards the running side until the full inclination of 1 in 20 from the vertical is reached at a distance of five feet back from the nose in the case of the 1 in 6½ and 1 in 7, and seven feet in the case of the 1 in 7½.

The Wing Rails to be canted towards the running side at an inclination of 1 in 20 from the vertical.

The Check Rails to be vertical.

All Bolts and Nuts to conform to the British Standard Specification Nº 64 and to be fitted with Spring Washers.

The length of closure shewn on the 1 in 6½ will join up to the Wing Rails of the common crossing and for the 1 in 7 and 1 in 7½ the length of closure Rails required are 10'-7 15/16" and 12'-11 3/16" respectively. (Theoretical.)

The lengths A and B are shewn in the "Table of Intersection Lengths" on Drawing Nº 90.

The following Details applicable to all obtuse angle crossings appear on Drawing Nº 90.

"Crossing nose before and after milling."
"Holding-down Bolt, Saddle and Washer plate."
"C.I. Washers, also Chair Screw for built-up 'A' Chair fastenings."

For Details of obtuse angle crossing Chairs, see Drawing Nº 91.

For Details of the S.2. Chair, see Drawing Nº 52

For Details of the L.2. Chair, see Drawing Nº 53.

The angle of crossing in 1" figures to be stamped on the outside of the web of the Point and Wing Rails, 2'-4" from fishjoint end.

STANDARD RAILWAY EQUIPMENT — PERMANENT WAY.

Nº 90.

OBTUSE ANGLE CROSSING 1 IN 8.

85 R. B.S. RAIL.

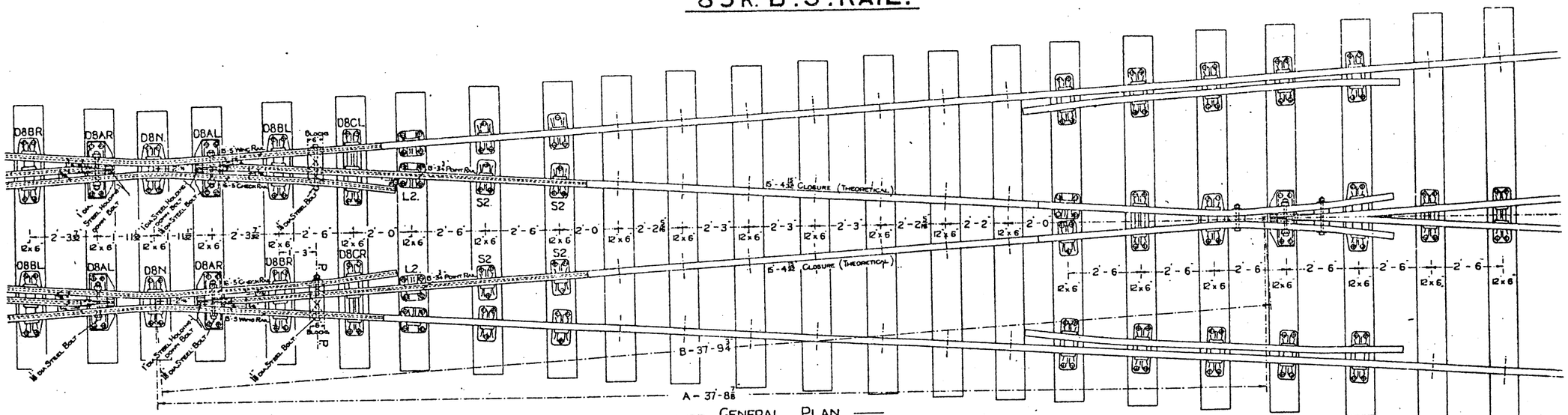

GENERAL PLAN.

SCALE:— ¾ INCH — 1 FOOT.

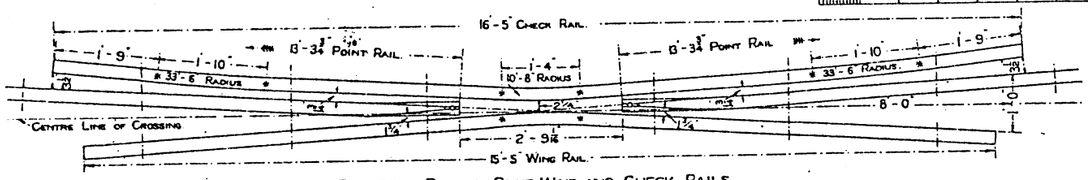

ENLARGED PLAN OF POINT, WING AND CHECK RAILS.

SCALE:— ¾ INCH — 1 FOOT.

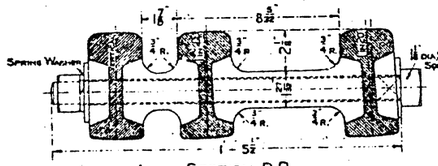

SECTION P.P.

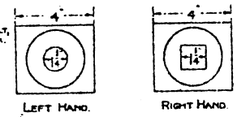

C.I. WASHERS FOR ⅝ BOLTS.

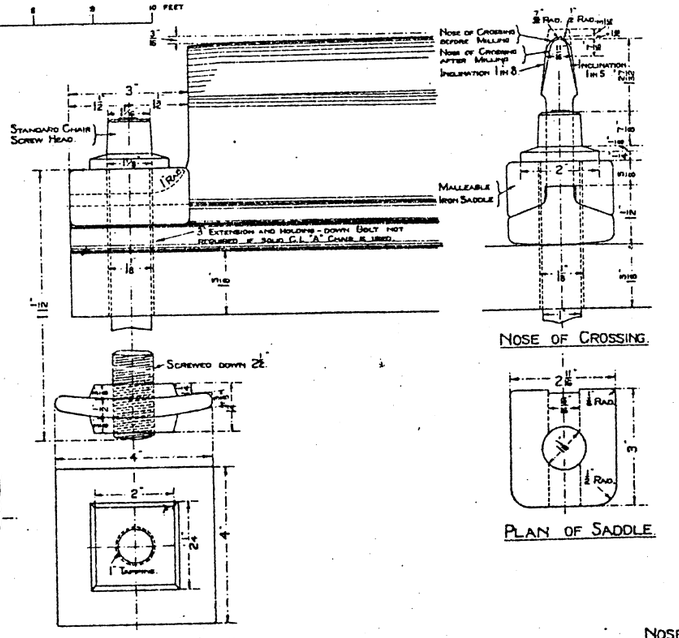

HOLDING-DOWN BOLT AND PLATE.

NOSE OF CROSSING.

PLAN OF SADDLE.

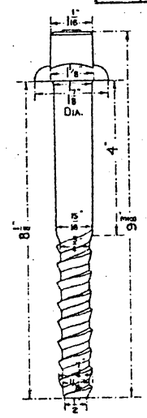

STEEL CHAIR SCREW FOR "A" CHAIR FASTENINGS.

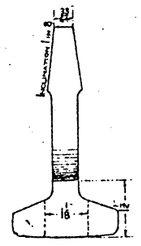

NOSE OF CROSSING AFTER SIDE PLANING.

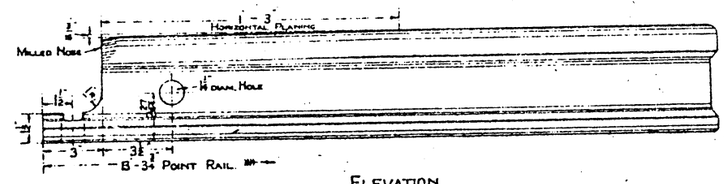

ELEVATION.

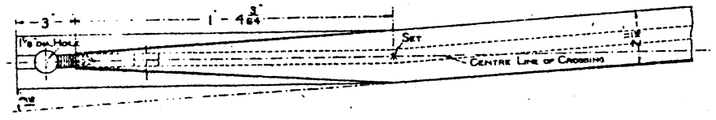

PLAN.

DETAILS OF POINT RAIL.

SCALE:— 1½ INCHES — 1 FOOT.

TABLE OF INTERSECTION LENGTHS.

Length.	Angle 1 in 4	Angle 1 in 4½	Angle 1 in 5	Angle 1 in 5½	Angle 1 in 6	Angle 1 in 6½	Angle 1 in 7	Angle 1 in 7½	Angle 1 in 8
A	18'-11¼"	21'-3 13/16"	23'-7 29/32"	26'-0 1/32"	28'-4 3/16"	30'-8 5/16"	33'-0 1/2"	35'-4 11/16"	37'-8 7/8"
B	19'-1 17/32"	21'-5¾"	23'-9 5/16"	26'-1 5/16"	28'-5 11/32"	30'-9 7/16"	33'-1 1/2"	35'-5 9/16"	37'-9¾"

NOTES.

The lengths of the Point Rails shewn apply to the intersection of straight edges only. In the case of curved intersections the length of the Point Rails will require to be varied.

The Point Rail to be vertical from the nose to the set. From the latter point the Rail is to be gradually canted towards the running side until the full inclination of 1 in 20 from the vertical is reached at a distance of six feet nine inches back from the nose.

The Wing Rails to be canted towards the running side at an inclination of 1 in 20 from the vertical.

The Check Rails to be vertical.

All Bolts and Nuts to conform to the British Standard Specification Nº 64 and to be fitted with Spring Washers.

For Details of obtuse angle crossing chairs, see Drawing Nº 91.

For Details of the S.2. Chair, see Drawing Nº 52.

For Details of the L2 Chair, see Drawing Nº 53.

The angle of crossing in 1" figures to 1/8 stamped on the outside of the web of the Point and Wing Rails, 2'-4" from fishtoint end.

QUARTER FULL SIZE.

STANDARD RAILWAY EQUIPMENT — PERMANENT WAY.

CHAIRS FOR OBTUSE ANGLE CROSSINGS.

85 R. B.S. RAIL.

D.N. CHAIR.
CROSSINGS 1 IN 5½ TO 1 IN 8.

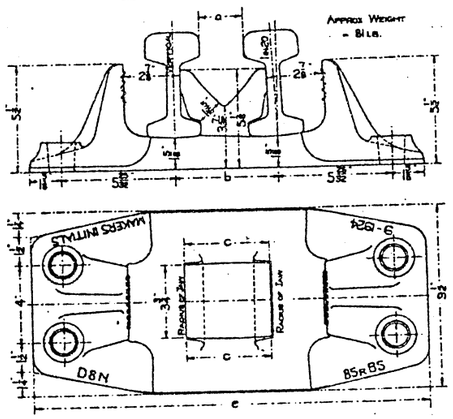

BUILT UP D.A.R. CHAIR.
CROSSINGS 1 IN 4 TO 1 IN 8.

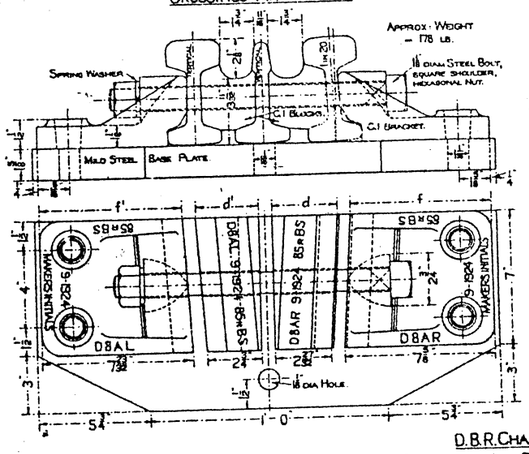

SOLID CAST IRON D.A.R. CHAIR
CROSSINGS 1 IN 4 TO 1 IN 8.

NOTE. WHEN THIS CHAIR IS USED, THE 3" EXTENSION OF POINT RAIL FOR HOLDING DOWN BOLT IS NOT REQUIRED

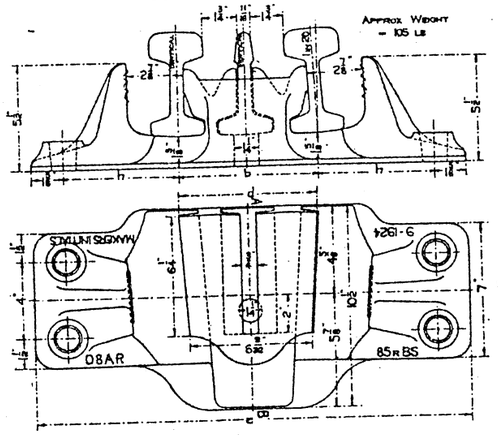

SECTION A.B.

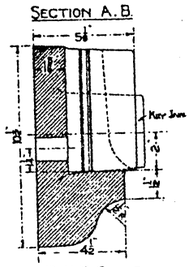

L2C.C.R.

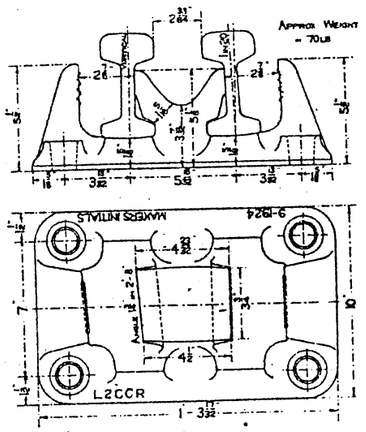

D.B.R. CHAIR.
CROSSINGS 1 IN 4 TO 1 IN 6½.

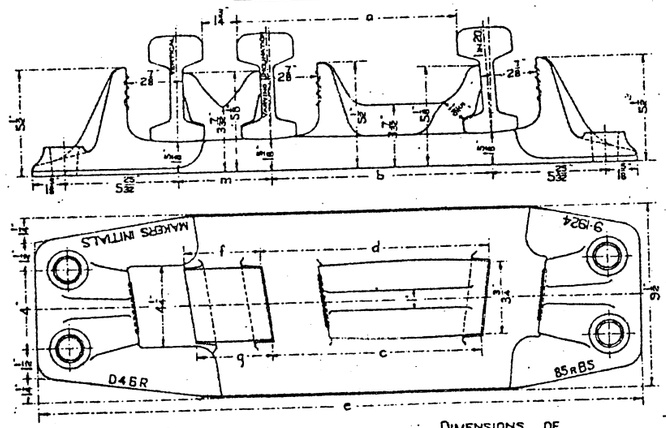

D.B.R. CHAIR.
CROSSINGS 1 IN 7 TO 1 IN 8.

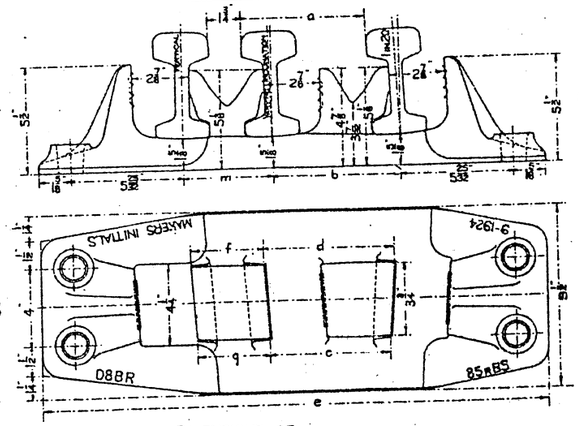

D.C.R. CHAIR.
CROSSINGS 1 IN 7½ AND 1 IN 8.

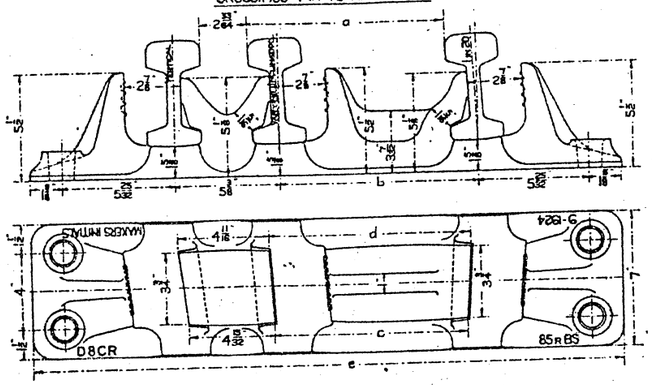

DIMENSIONS OF BUILT UP D.A.R. CHAIRS.

CROSSING	d	d'	f	f'
1 IN 4	3 23/32"	3 1/8"	6 3/4"	6 29/32"
1 IN 4½	3 1/8"	3 9/32"	6 29/32"	6 31/32"
1 IN 5	3 3/16"	3 1/4"	6 31/32"	7 1/32"
1 IN 5½	3 9/32"	3 3/8"	7"	7 3/32"
1 IN 6	3 7/16"	3 11/32"	7 1/32"	7 1/8"
1 IN 6½	3 1/8"	3 9/32"	7 3/32"	7 1/8"
1 IN 7	3 11/32"	3 3/4"	7 1/8"	7 3/16"
1 IN 7½	3 3/8"	3 7/32"	7 5/32"	7 3/4"
1 IN 8	3 9/32"	3 3/8"	7 1/8"	7 3/16"

DIMENSIONS OF SOLID C.I.D.A.R. CHAIRS.

CROSSING	b	d	e	h
1 IN 4	7 3/32"	7 5/32"	1'-10 15/32"	6 7/32"
1 IN 4½	7 3/32"	7 5/32"	1'-10 15/32"	6"
1 IN 5	7 5/32"	7 11/32"	1'-10 9/32"	6"
1 IN 5½	7 1/32"	7 5/32"	1'-10 11/32"	5 31/32"
1 IN 6	7"	7 1/8"	1'-10 3/4"	5 25/32"
1 IN 6½	7 1/8"	7 3/4"	1'-10 3/4"	5 25/32"
1 IN 7	7 1/8"	7 3/8"	1'-10 3/4"	5 25/32"
1 IN 7½	7 1/8"	7 1/8"	1'-10 13/16"	5 25/32"
1 IN 8	7 1/8"	7 1/8"	1'-10 3/4"	5 25/32"

DIMENSIONS OF D. B. R. CHAIRS.

CROSSING	a	b	c	d	e	f	g	m	APPROX. WEIGHT	VARYING INCLINATION
1 IN 4	11"	11 1/8"	10 3/8"	11 1/2"	2'-6 11/32"	3 3/32"	3 3/32"	4 5/32"	133 LB	1 IN 40
1 IN 4½	9 25/32"	9 29/32"	9 25/32"	10 3/4"	2'-5 3/32"	3 1/32"	3 1/32"	4 1/16"	130 -	1 IN 43
1 IN 5	8 31/64"	8 13/16"	8 15/32"	9 29/32"	2'-4 5/16"	3 1/32"	3 1/32"	4 1/16"	127 -	1 IN 46
1 IN 5½	8"	8 1/32"	7 15/32"	8 25/32"	2'-3 13/32"	3 1/32"	3 1/32"	4 1/16"	124 -	1 IN 47
1 IN 6	7 21/64"	7 7/8"	7 1/16"	7 11/16"	2'-2 27/32"	3 1/32"	3 1/32"	4 1/16"	121 -	1 IN 52
1 IN 6½	7 17/64"	7 1/8"	7 1/8"	8 1/16"	2'-3 1/4"	3 1/32"	3 1/32"	4 1/16"	119 -	1 IN 44
1 IN 7	7 63/64"	7 1/16"	6 31/32"	7 1/8"	2'-2 11/16"	3 1/32"	3 1/32"	4 1/16"	117 -	1 IN 48
1 IN 7½	6 45/64"	6 29/32"	6 27/32"	7 5/32"	2'-2 3/32"	3 1/32"	3 1/32"	4 1/16"	115 -	1 IN 81
1 IN 8	6 5/32"	6 9/32"	6 1/8"	6 25/32"	2'-1 29/32"	3 1/32"	3 1/32"	4 1/16"	113 -	1 IN 88

DIMENSIONS OF D. N. CHAIRS.

CROSSING	a	b	c	e	RADII OF JAWS
1 IN 5½	2 27/64"	5 3/8"	4 25/32"	1'-8 1/4"	7'-4"
1 IN 6	2 27/64"	5 1/2"	4 27/32"	1'-8 5/16"	8'-0"
1 IN 6½	2 23/64"	5 5/8"	4 15/16"	1'-8 1/2"	8'-8"
1 IN 7	2 21/64"	5 3/4"	4 7/8"	1'-8 21/32"	9'-4"
1 IN 7½	2 9/32"	5 5/8"	4 3/4"	1'-8 25/32"	10'-0"
1 IN 8	2 1/4"	5 5/8"	4 25/32"	1'-8"	10'-8"

DIMENSIONS OF D.C.R. CHAIRS.

CROSSING	a	b	c	d	e	APPROX. WEIGHT	VARYING INCLINATION
1 IN 7½	10 45/64"	10 25/32"	10 1/2"	11"	2'-6 31/32"	109 LB	1 IN 29.
1 IN 8	10 1/2"	10 1/8"	9 29/32"	10 5/8"	2'-6 5/16"	111 -	1 IN 29.

SCALE:— 1½ INCHES = 1 FOOT.

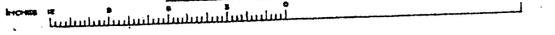

NOTES.

THE RAIL JAW OF ALL CROSSING CHAIRS TO CONFORM TO THE PROFILE OF THE RAIL JAW OF THE S 2 CH.'19 (DRAWING N° 52) SUBJECT, HOWEVER, TO THE ESSENTIAL DIFFERENCE IN THE HORIZONTAL INCLINATION NECESSITATED BY THE ANGLE OF THE CROSSING.

THE DETAILS OF THE KEY JAW ARE SHEWN ON DRAWING N° 85 AND THIS DRAWING IS TYPICAL OF KEY JAWS FOR ALL CROSSING CHAIRS, SUBJECT TO THE ESSENTIAL DIFFERENCE IN THE HORIZONTAL INCLINATION NECESSITATED BY THE ANGLE OF THE CROSSING AND SUBJECT ALSO TO THE HEIGHT BEING. 4⅞" INSTEAD OF 5½" IN THE CASE OF THE POINT RAIL KEY JAWS OF D.B.R. CHAIR, CROSSINGS 1 IN 7 TO 1 IN 8.

THE JAWS OF THE L2C.C.R. TO CONFORM TO THE PROFILE OF THE JAWS OF THE L 2. CHAIR (DRAWING N° 53) SUBJECT TO THE ESSENTIAL DIFFERENCE IN THE HORIZONTAL INCLINATION NECESSITATED BY THE ANGLE OF THE CHECK RAIL WITH THE POINT RAIL.

THE DETAILS OF THE C.I. BRACKETS FOR THE BUILT-UP A CHAIR ARE SHEWN ON DRAWING N° 83 AND THIS DRAWING IS TYPICAL OF THE BRACKETS FOR ALL CROSSINGS, SUBJECT TO THE ESSENTIAL DIFFERENCE IN THE HORIZONTAL INCLINATION NECESSITATED BY THE ANGLE OF THE CROSSING.

THE HORIZONTAL DIMENSIONS APPEARING IN THE ELEVATION DRAWINGS ARE THOSE OBTAINING IN THE CENTRE OF THE CHAIR, EXCEPTING IN THE CASE OF THE A CHAIRS WHICH LATTER ARE TAKEN NOT AT THE CENTRE OF THE CHAIR BUT AT THE POINT OF THE CROSSING.

THE DIMENSIONS SHEWN ON THE DRAWINGS FOR THE RIGHT HAND CHAIRS APPLY ALSO TO THE CORRESPONDING LEFT HAND CHAIRS.

THE HOLES IN THE CHAIR BASES TO TAKE THE STANDARD FERRULE AND SCREW.

THE NUMBER OF THE CROSSING TO BE CAST ON EACH SPECIAL CHAIR, IN FRONT OF THE CHAIR LETTER AND THE LETTER R OR L AFTER THE CHAIR LETTER, TO INDICATE FOR WHICH ANGLE OF CROSSING AND WHETHER RIGHT OR LEFT HAND, IT HAS BEEN DESIGNED. THE DATE OF MANUFACTURE, MAKERS INITIALS, AND WEIGHT OF RAIL DESIGNED FOR, ARE ALSO TO BE CAST ON EACH SPECIAL CHAIR.

STANDARD RAILWAY EQUIPMENT — PERMANENT WAY. Nº 92.

1 IN 8 OBTUSE ANGLE CROSSING WITH SINGLE & DOUBLE SLIP ROADS.

85 R. B.S. RAIL.

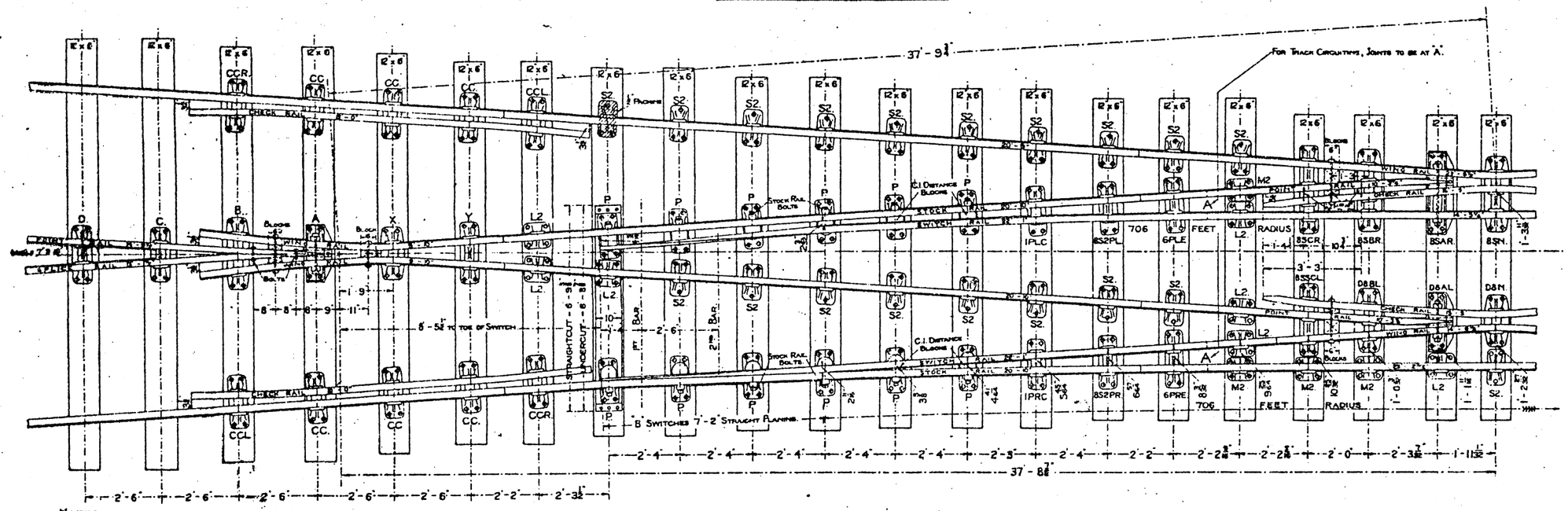

NOTES:-

For Details of 1 in 8 Single and Double Slip Chairs, see Drawing Nº 93.
" " 1 in 8 Common Crossing See Drawing Nº 79
" " 1 in 8 Common Crossing Chairs, See Drawing Nºs 83, 84, 85.
" " 1 in 8 Obtuse Angle Crossing, see Drawing Nº 90.
" " 1 in 8 Obtuse Angle Crossing Chairs, see Drawing Nº 91
" " "8" Undercut Switches, see Drawing Nº 56.
" " "6" Straightcut Switches, see Drawing Nº 61
" " Switch Chairs, see Drawing Nº 65.
" " Stretcher Bars see Drawing Nºs 69, 70, 73, 74
" " Switch Anchor, C.I. Distance Blocks, Stock Rail and Stud Bolts see Drawing Nº 66.
" " S.2. Chair see Drawing Nº 52
" " L.2. Chair see Drawing Nº 53
" " M.2. Chair see Drawing Nº 94

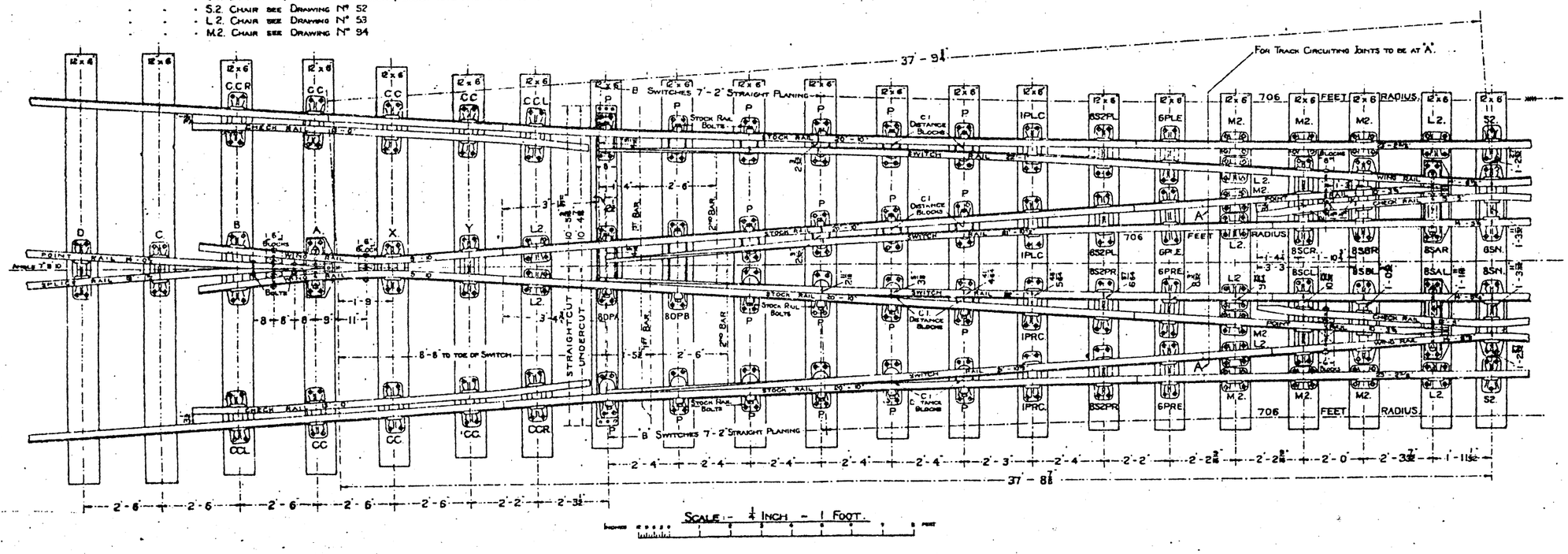

Scale:- ¼ Inch - 1 Foot.

STANDARD RAILWAY EQUIPMENT — PERMANENT WAY.

Nº 92A

1 IN 7 OBTUSE ANGLE CROSSING WITH SINGLE & DOUBLE SLIP ROADS.

85 R. B. S. RAIL.

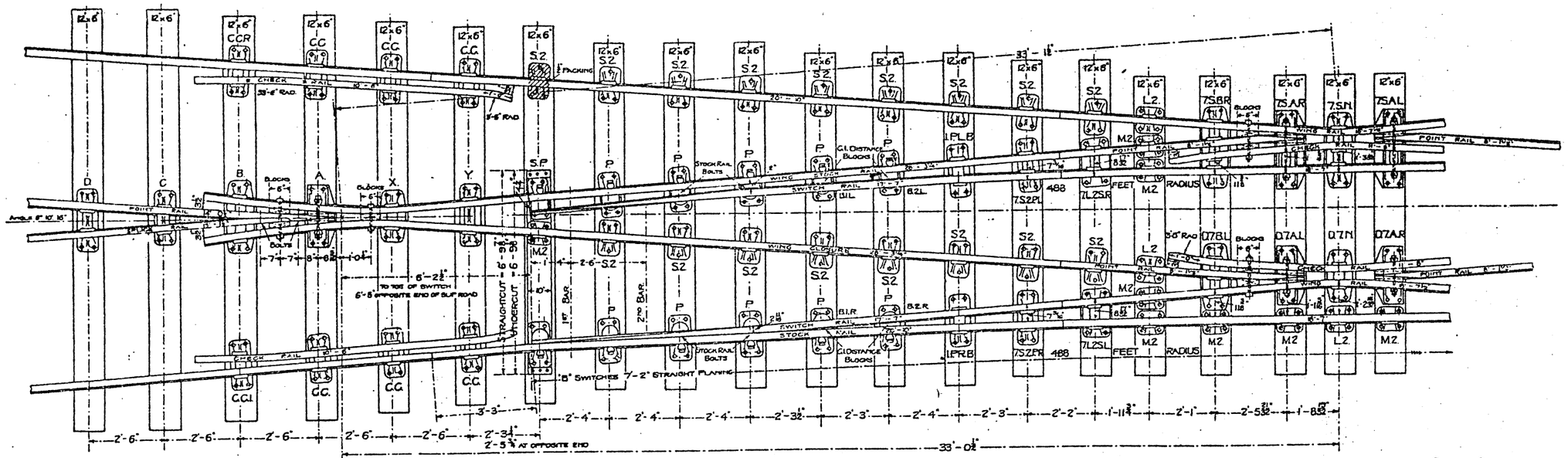

NOTES:-

- For details of 1 in 7 Single and Double Slip Chairs, see Drawing Nº 83A
- 1 in 7 Common Crossing, see Drawing Nº 78.
- 1 in 7 Common Crossing Chairs, see Drawing Nºs 83, 84, 85.
- 1 in 7 Obtuse Angle Crossing, see Drawing Nº 89.
- 1 in 7 Obtuse Angle Crossing Chairs, see Drawing Nº 91
- '8' Undercut Switches, see Drawing Nº 56.
- '8' Straightcut Switches, see Drawing Nº 61.
- Switch Chairs, see Drawing Nº 65 and 65A
- Switch Anchor, G.I. Distance Blocks, Stock Rail, and Stud Bolts see Drawing Nº 66.
- S2. Chair see Drawing Nº 52.
- L2. Chair see Drawing Nº 53.
- M2. Chair see Drawing Nº 94.
- Stretcher Bars, see Drawing Nºs 20 to 27. All Brackets should be bent so that Stretcher Bars are square to the centre line of crossing.

Double Slips
Diagram of Rail Lengths

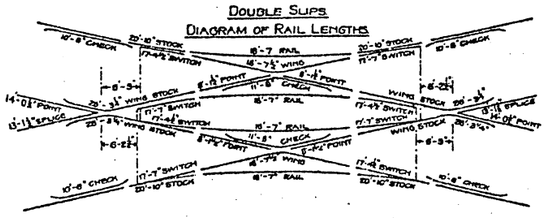

Single Slips
Diagram of Rail Lengths

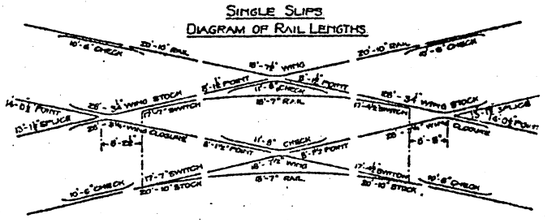

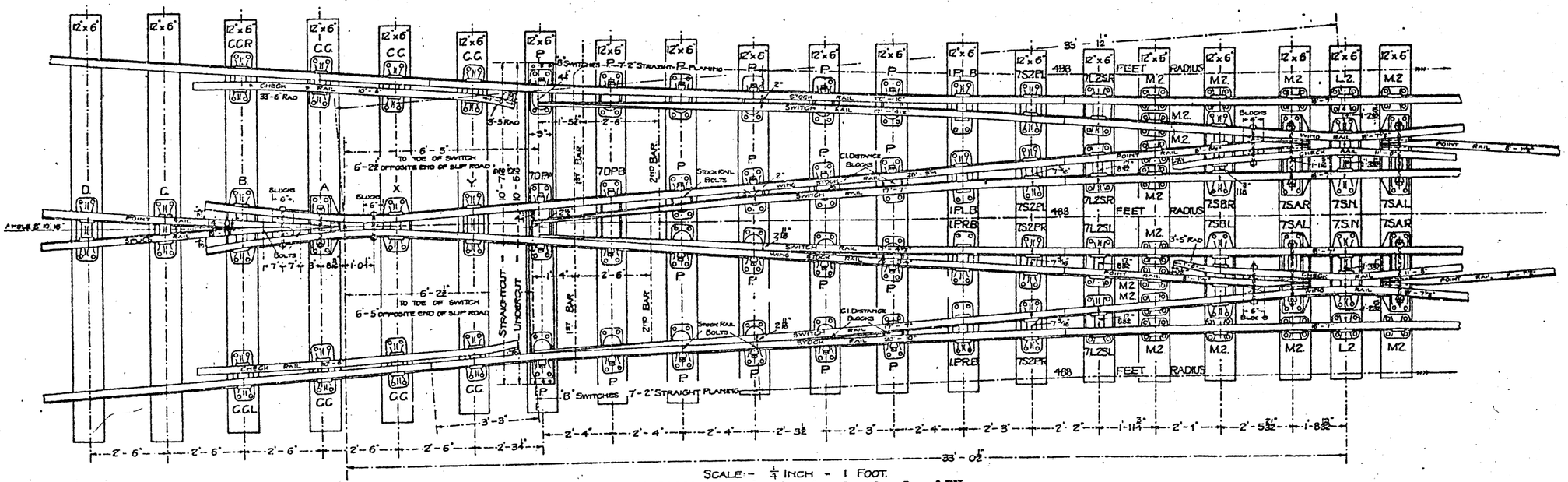

SCALE - ¼ INCH = 1 FOOT.

STANDARD RAILWAY EQUIPMENT — PERMANENT WAY.

No 92B

1 IN 7½ OBTUSE ANGLE CROSSING WITH SINGLE & DOUBLE SLIP ROADS.

85 R. B. S. RAIL.

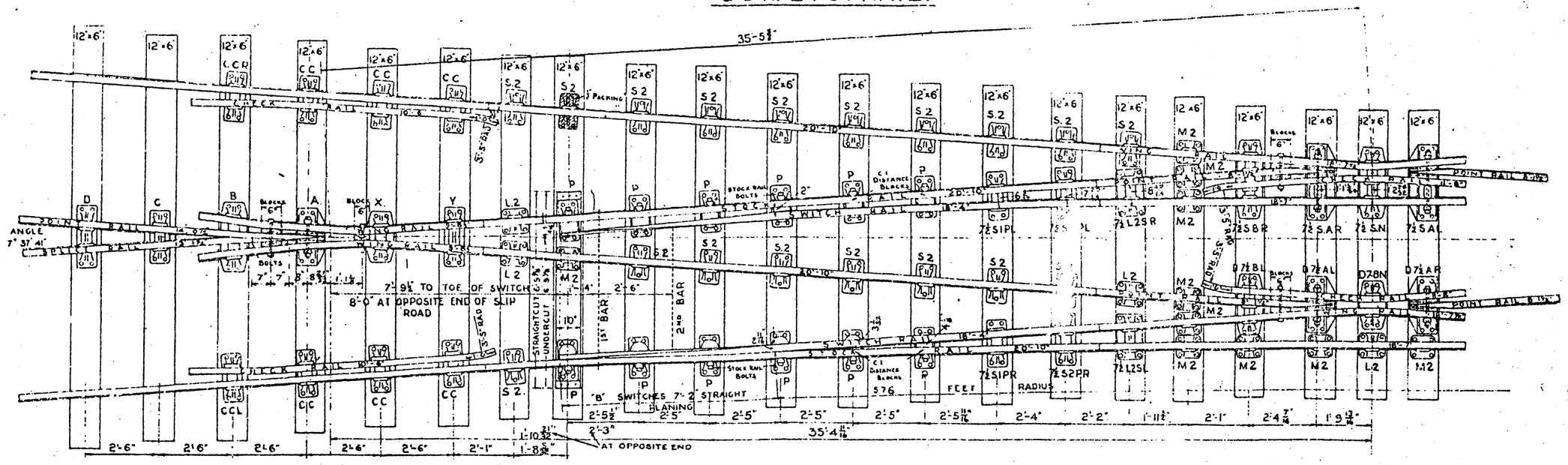

NOTES:

- For Details of 1 in 7½ Single and Double Slip Chairs, see Drawing Nº 93B.
- 1 in 7½ Common Crossing see Drawing Nº 78
- 1 in 7½ Common Crossing Chairs, see Drawings Nos 83, 84 and 85
- 1 in 7½ Obtuse Angle Crossing see Drawing Nº 89.
- 1 in 7½ Obtuse Angle Crossing Chairs, see Drawing Nº 91.
- 'B' Undercut Switches, see Drawing Nº 56
- 'B' Straightcut Switches see Drawing Nº 61.
- Switch Chairs, see Drawings Nos 65, 65A and 92A.
- Switch Anchor, C.I. Distance Blocks, Stock Rail and Stud Bolts see Drawing Nº 66.
- S2 Chair see Drawing Nº 52
- L2 Chair see Drawing Nº 53
- M2 Chair see Drawing Nº 94
- Stretcher Bars see Drawings Nos 70, 74, 23B
- Soleplates see Drawing Nº 23C

Double Slips.
Diagram of Rail Lengths.

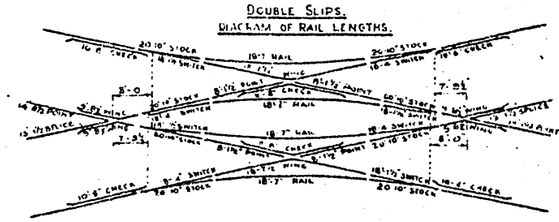

Single Slips.
Diagram of Rail Lengths.

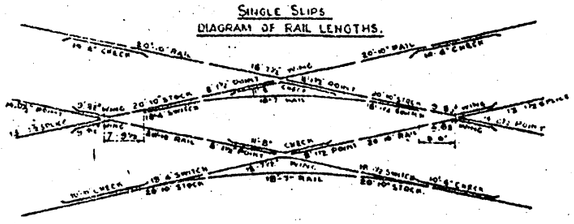

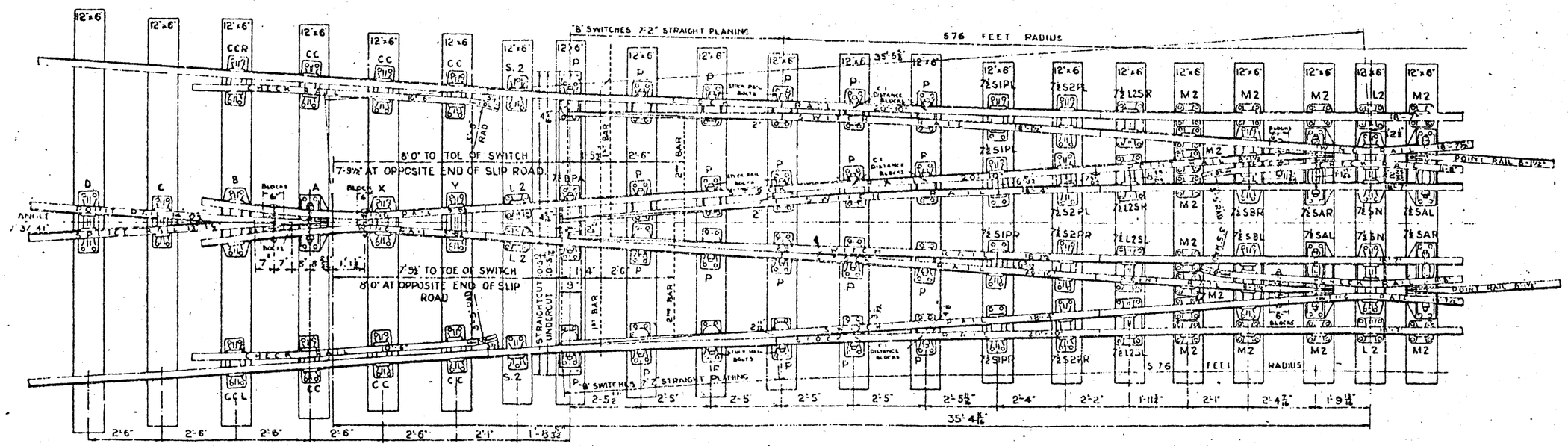

Scale ¼ Inch = 1 Foot

INCHES 0 FEET

STANDARD RAILWAY EQUIPMENT — PERMANENT WAY.

CHAIRS FOR 1 IN 8 OBTUSE ANGLE CROSSING WITH SINGLE & DOUBLE SLIP ROADS.

85 R. B.S. RAIL.

DIMENSIONS OF 8.D.P.A. AND 8.D.P.B. CHAIRS.

CHAIR.	SWITCH.	a.	b.	c.	d.	e.	APPROX. WT.
8DPA.	UNDERCUT.	1'-1 1/16"	1'-4 1/4"	1'-4 11/32"	1'-4 3/16"	2'-7 1/16"	96 LB.
	STRAIGHTCUT.	1'-1 15/16"	1'-5"	1'-5 5/32"	1'-5 3/16"	2'-7 13/16"	98 LB.
8DPB.	UNDERCUT.	1'-4 3/16"	1'-7 3/4"	1'-7 27/32"	1'-8 3/16"	2'-10 3/16"	105 LB.
	STRAIGHTCUT.	1'-5 1/16"	1'-8 1/4"	1'-8 11/32"	1'-8 13/16"	2'-11 1/16"	106 LB.

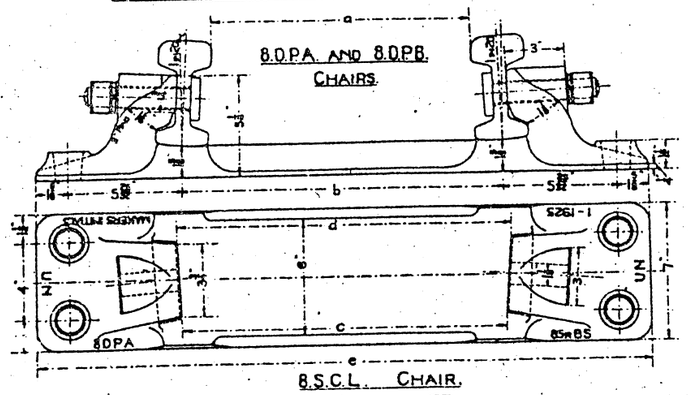

8.S.S.C.L. CHAIR.
APPROX. WEIGHT. - 101 LB.

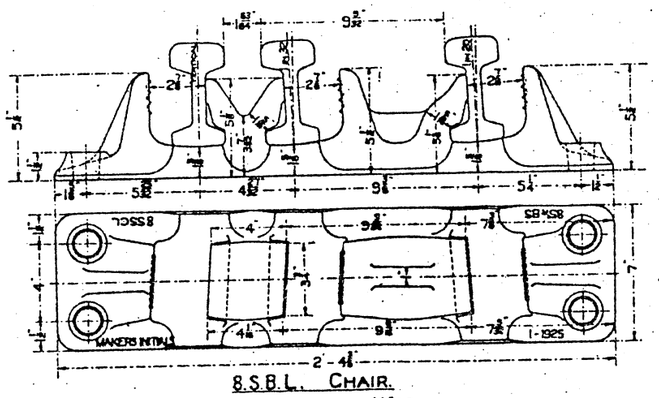

8.S.2.P.R. CHAIR.
APPROX. WEIGHT - 67 LB.

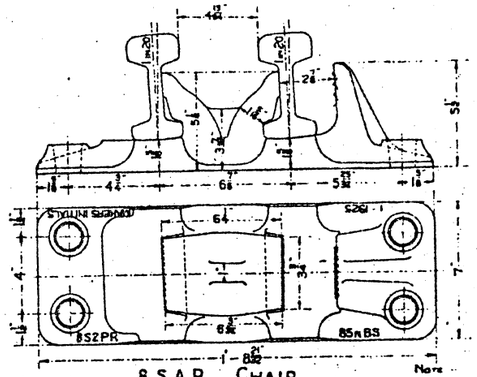

8.S.C.L. CHAIR.
APPROX. WEIGHT. - 127 LB.

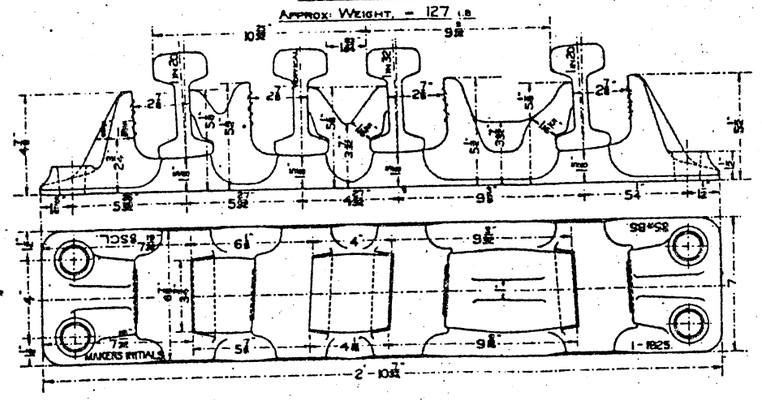

8.S.B.L. CHAIR.
APPROX. WEIGHT - 148 LB.

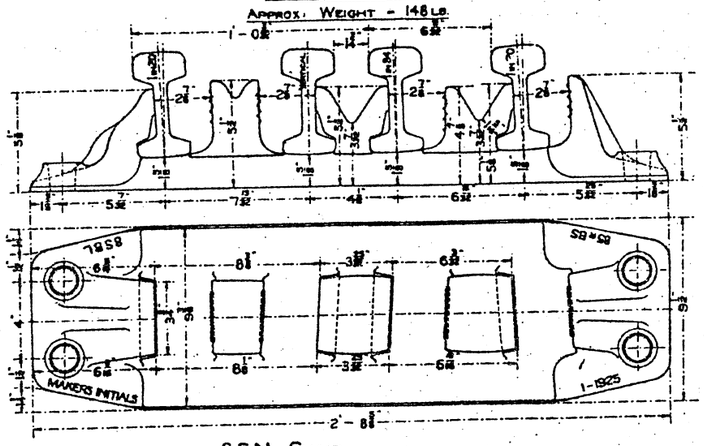

8.S.A.R. CHAIR.
APPROX. WEIGHT. - 136 LB.

NOTE
WHEN THE CHAIR IS USED THE 3" EXTENSION OF POINT RAIL FOR HOLDING-DOWN BOLT IS NOT REQUIRED

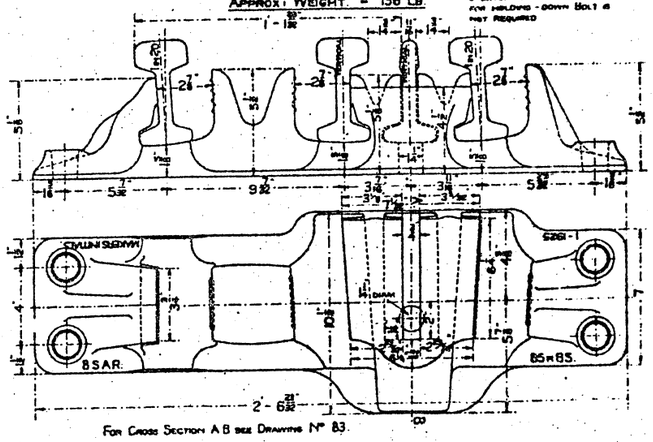

FOR CROSS SECTION A B SEE DRAWING Nº 83.

8.S.A.R. CHAIR (BUILT-UP)
APPROX. WEIGHT - 260 LB.

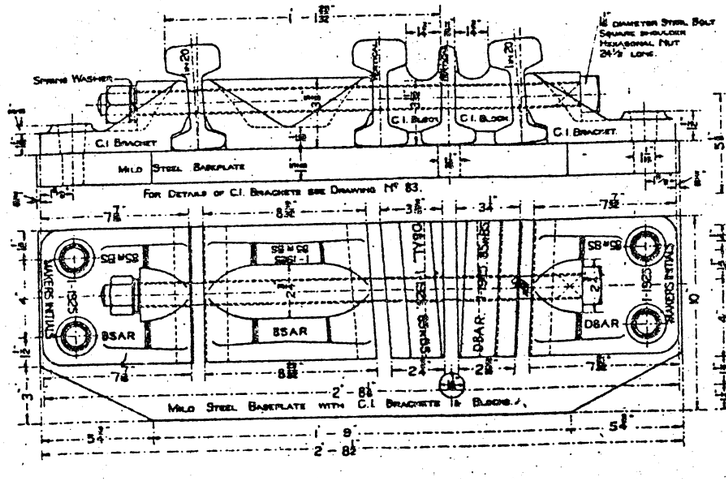

8.S.N. CHAIR.
APPROX. WEIGHT - 134 LB.

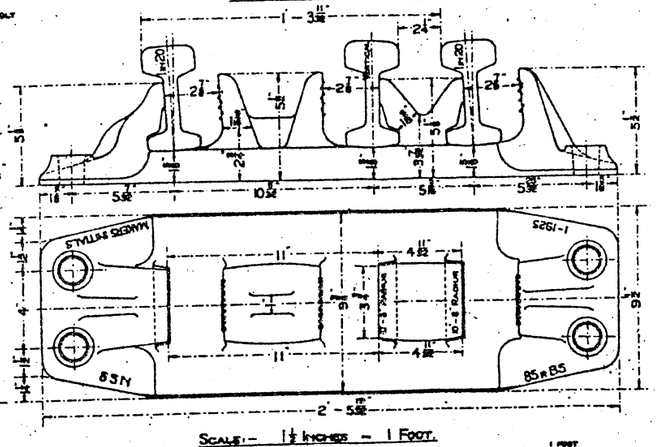

SCALE:- 1 1/2 INCHES = 1 FOOT.

NOTES

THE RAIL JAWS OF ALL SLIP CHAIRS OTHER THAN THE "P", "DPA" AND "DPB" CHAIRS CONFORM TO THE PROFILE OF THE RAIL JAW OF THE S.2. CHAIR. (SEE DRAWING Nº 52), SUBJECT, HOWEVER, TO THE ESSENTIAL DIFFERENCE IN THE HORIZONTAL INCLINATION NECESSITATED BY THE ANGLE OF THE CROSSINGS.

THE DETAILS OF THE KEY JAW ARE SHOWN ON DRAWINGS Nºˢ 65 & 85 AND THESE DRAWINGS ARE TYPICAL OF THE KEY JAWS FOR ALL SLIP CHAIRS, SUBJECT TO THE ESSENTIAL DIFFERENCE IN THE HORIZONTAL INCLINATION NECESSITATED BY THE ANGLE OF THE CROSSINGS, AND SUBJECT ALSO TO THE HEIGHT BEING 4 7/8" INSTEAD OF 5 1/2" IN THE CASE OF THE INNER JAW OF THE "8 S C" CHAIR, AND THE POINT RAIL KEY JAW OF THE "8 S B" CHAIR.

ALSO THE DIMENSION FROM THE CENTRE OF RAIL SEAT TO EDGE OF CHAIR IS 6 1/4" INSTEAD OF 7 3/32" IN THE CASE OF THE OUTER JAWS OF THE "8 S C" AND THE "8 S S C" CHAIRS.

THE HORIZONTAL DIMENSIONS APPEARING ON THE ELEVATION DRAWINGS ARE THOSE OBTAINING IN THE CENTRE OF THE CHAIR, EXCEPTING IN THE CASE OF THE "A" CHAIR, WHICH LATTER ARE TAKEN NOT AT THE CENTRE OF THE CHAIR, BUT AT THE POINT OF THE CROSSING.

THE DIMENSIONS SHOWN ON THE DRAWINGS FOR THE RIGHT HAND CHAIRS, APPLY ALSO TO THE CORRESPONDING LEFT HAND CHAIRS, AND VICE VERSA.

SWITCH AND STOCK RAILS TO BE CANTED TOWARDS THE RUNNING SIDE AT AN INCLINATION OF 1 IN 20 FROM THE VERTICAL.

THE HOLES IN THE CHAIR BASES TO TAKE THE STANDARD FERRULE AND SCREW.

FOR DETAIL OF CHAIR SCREWS FOR "8 S A" BUILT UP CHAIR SEE DRAWING Nº 90

THE LETTERS "UN" AND "ST" TO BE CAST ON THE "8 D P A" AND "8 D P B" CHAIRS TO INDICATE FOR WHICH TYPE OF SWITCH, UNDERCUT OR STRAIGHTCUT, IT HAS BEEN DESIGNED.

THE DATE OF MANUFACTURE, MAKERS INITIALS, AND WEIGHT OF RAIL DESIGNED FOR, ARE ALSO TO BE CAST ON EACH CHAIR

STANDARD RAILWAY EQUIPMENT — PERMANENT WAY.

CHAIRS FOR 1 IN 7 OBTUSE ANGLE CROSSING WITH SINGLE & DOUBLE SLIP ROADS.

85R. B.S. RAIL.

DIMENSIONS OF 7.DPA AND 7.DPB CHAIRS.

CHAIR	SWITCH.	a	b	c	d	e	APPROX. WT.
7.DPA.	UNDERCUT	11 5/16	1'-2 1/4"	1'-2 1/8"	1'-2 1/8"	2'-5 1/8"	83 LB.
	STRAIGHTCUT	11 3/16	1'-2 3/16"	1'-3 1/8"	1'-3 5/16"	2'-5 5/16"	88 LB.
7.DPB	UNDERCUT	1'-3 1/8"	1'-6 1/4"	1'-6 1/8"	1'-6 1/4"	2'-9 1/2"	101 LB.
	STRAIGHTCUT	1'-3 3/16"	1'-6 3/8"	1'-6 5/8"	1'-7 3/8"	2'-9 3/4"	103 LB.

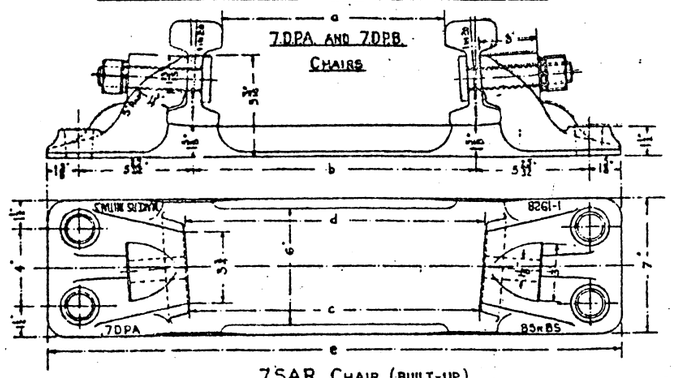

7.S2PR. CHAIR
APPROX. WEIGHT 70 LB.

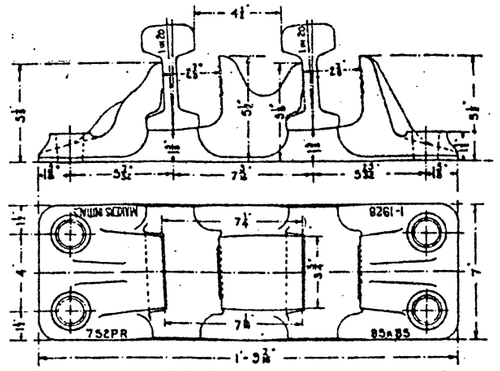

7.L2SR. CHAIR
APPROX. WEIGHT 73 LB.

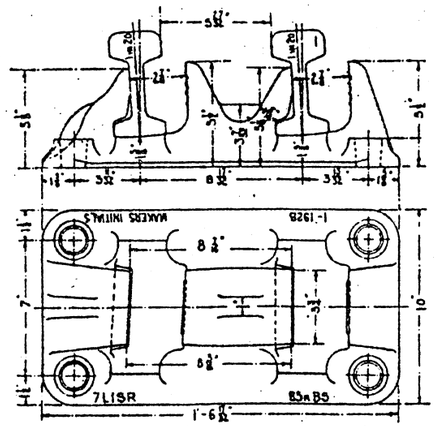

7.S.A.R. CHAIR (BUILT-UP)
APPROX. WEIGHT 258 LB.

FOR DETAILS OF C.I. BRACKETS SEE DRAWING Nº 85

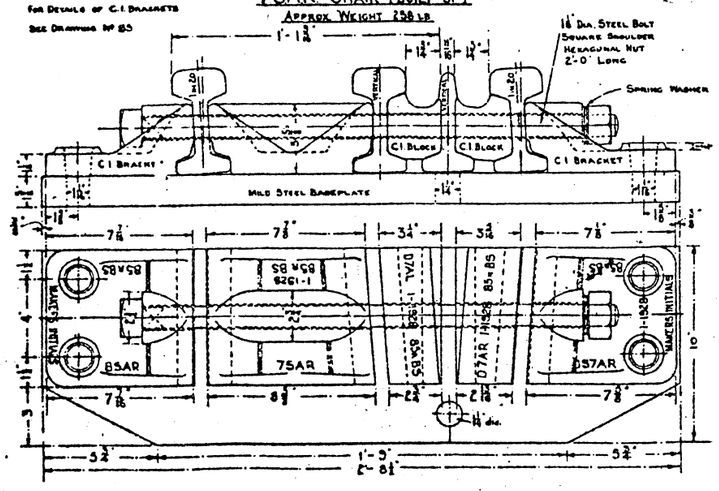

7.S.A.R. CHAIR (CAST IRON)
APPROX. WEIGHT 133 LB.

NOTE -
WHEN THIS CHAIR IS USED THE 5" EXTENSION OF POINT RAIL FOR HOLDING-DOWN BOLT IS NOT REQUIRED

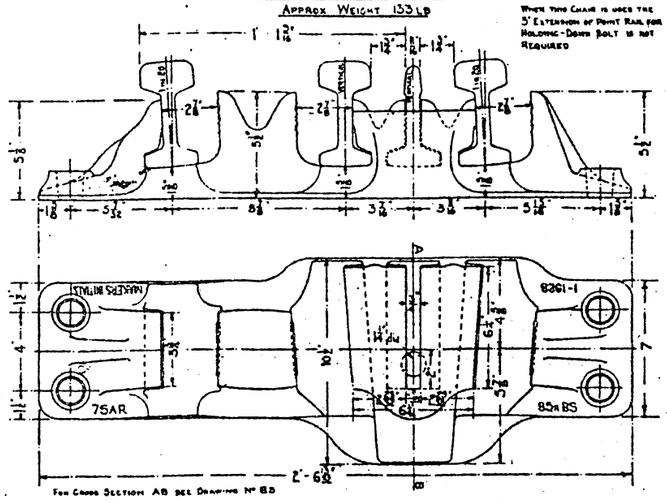

FOR CROSS SECTION AB SEE DRAWING Nº 85

S.P. CHAIR
APPROX. WEIGHT 54 LB.

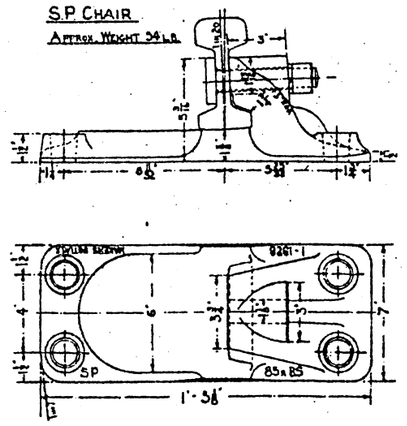

7.S.B.R. CHAIR
APPROX. WEIGHT 146 LB.

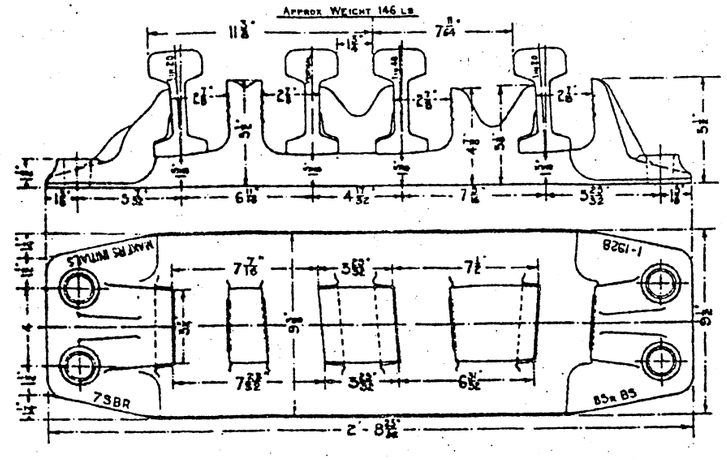

7.S.N. CHAIR
APPROX. WEIGHT 134 LB.

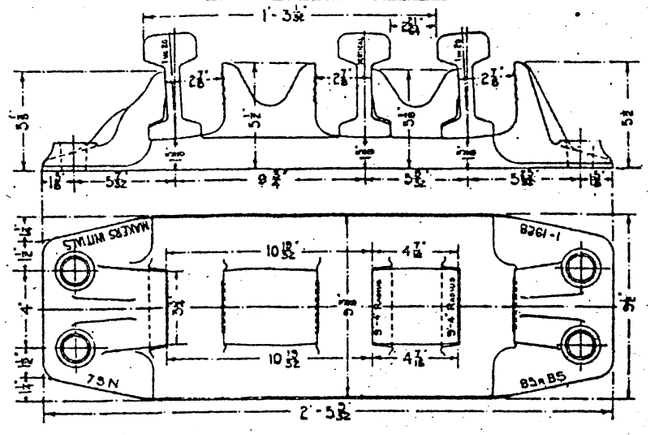

NOTES.

THE RAIL JAWS OF ALL SLIP CHAIRS OTHER THAN THE "P.DPA." AND "DPB" AIRS CONFORM TO THE PROFILE OF THE RAIL JAW OF THE S2 CHAIR, (SEE DRAWING Nº S2), SUBJECT HOWEVER, THE ESSENTIAL DIFFERENCE IN THE HORIZONTAL INCLINATION NECESSITATED BY THE ANGLE OF THE CROSSING.

THE DETAILS OF THE KEY JAW ARE SHOWN ON DRAWINGS Nº 85, 85A & 85 AND THESE DRAWINGS ARE TYPICAL OF THE KEY JAWS FOR ALL SLIP CHAIRS, SUBJECT TO THE ESSENTIAL DIFFERENCE IN THE HORIZONTAL INCLINATION, NECESSITATED BY THE ANGLE OF THE CROSSING, AND SUBJECT ALSO TO THE HEIGHT BEING 4 1/2" INSTEAD OF 5 1/2" IN THE CASE OF THE POINT RAIL KEY JAW OF THE 7.S.B. CHAIR

THE HORIZONTAL DIMENSIONS APPEARING ON THE ELEVATION DRAWINGS, ARE THOSE OBTAINING IN THE CENTRE OF THE CHAIR EXCEPTING IN THE CASE OF THE "A" CHAIR, WHICH LATTER ARE TAKEN NOT AT THE CENTRE OF THE CHAIR BUT AT THE POINT OF THE CROSSING.

THE DIMENSIONS SHOWN ON THE DRAWINGS, FOR RIGHT HAND CHAIRS, APPLY ALSO TO THE CORRESPONDING LEFT HAND CHAIRS.

SWITCH AND STOCK RAILS, TO BE CANTED TOWARDS THE RUNNING SIDE AT AN INCLINATION OF 1 IN 20 FROM THE VERTICAL.

THE HOLES IN THE CHAIR BASES TO TAKE THE STANDARD FERRULE AND SCREW.

THE LETTERS "UN" AND "ST" TO BE CAST ON THE "7.DPA." AND "7.DPB." CHAIRS TO INDICATE FOR WHICH TYPE OF SWITCH, UNDERCUT OR STRAIGHTCUT, IT HAS BEEN DESIGNED.

THE DATE OF MANUFACTURE, MAKERS INITIALS, AND WEIGHT OF RAIL DESIGNED FOR ARE ALSO TO BE CAST ON EACH CHAIR.

FOR DETAILS OF CHAIR SCREWS FOR "7.S.A." BUILT-UP CHAIRS, SEE DRAWING Nº 45

SCALE:- 1 1/2 INCHES to 1 FOOT

STANDARD RAILWAY EQUIPMENT — PERMANENT WAY.

CHAIRS FOR 1 IN 7½ OBTUSE ANGLE CROSSING WITH SINGLE & DOUBLE SLIP ROADS.

85 R. B.S. RAIL.

DIMENSIONS OF 7½ D PA CHAIR

SWITCH	a	b	c	d	e	APPROXMT
UNDERCUT	1'-0 7/8"	1'-4 1/16"	1'-4 3/8"	1'-4 11/32"	2'-6 3/8"	99 LB
STRAIGHTCUT	1'-1 19/32"	1'-4 9/32"	1'-4 7/8"	1'-5 5/8"	2'-7 13/32"	101 LB

7½ D PA CHAIR

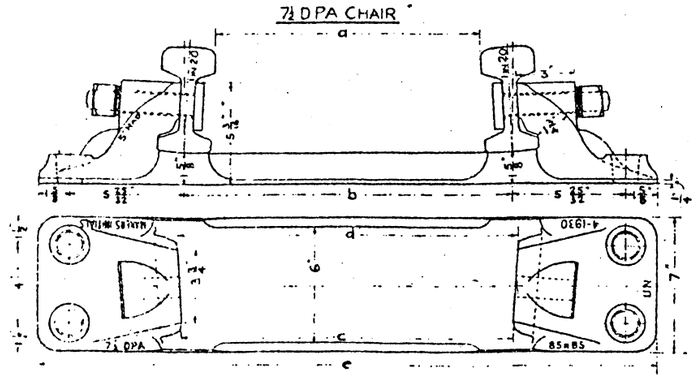

7½ S1PR CHAIR
APPROX. WEIGHT - 65 LB.

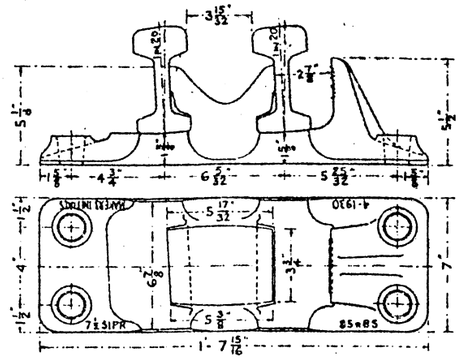

7½ S2PR CHAIR
APPROX. WEIGHT - 71 LB.

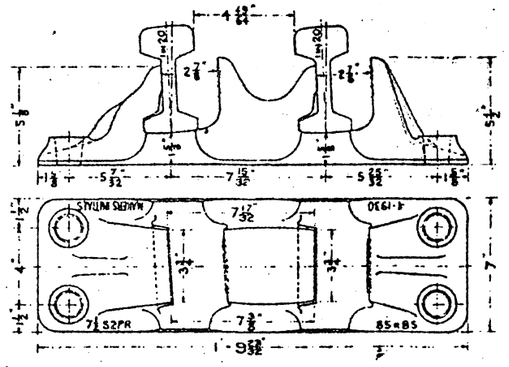

7½ S A R CHAIR (BUILT UP)
APPROX WEIGHT - 258 LB

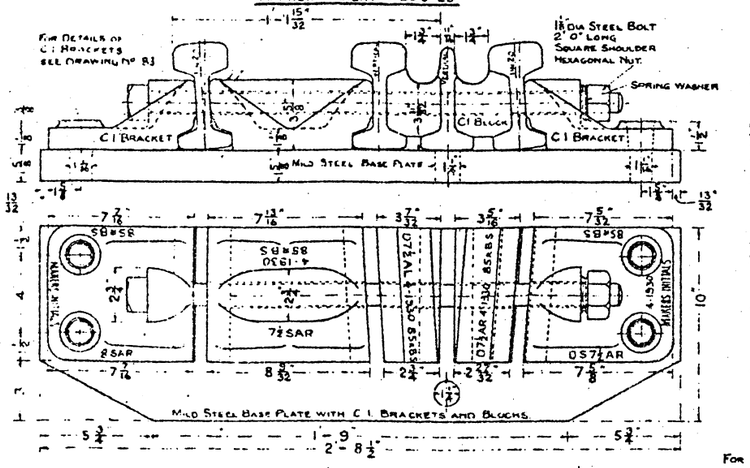

7½ S A R CHAIR (CAST IRON)
APPROX WEIGHT - 133 LB.

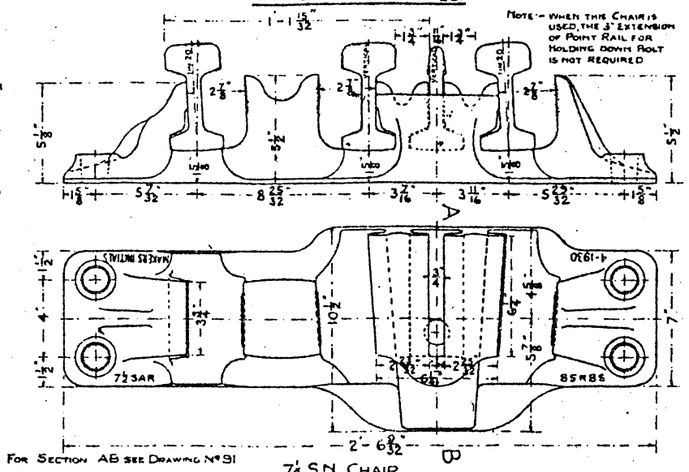

FOR SECTION AB SEE DRAWING No 91

7½ L2SL CHAIR
APPROX WEIGHT - 80 LB

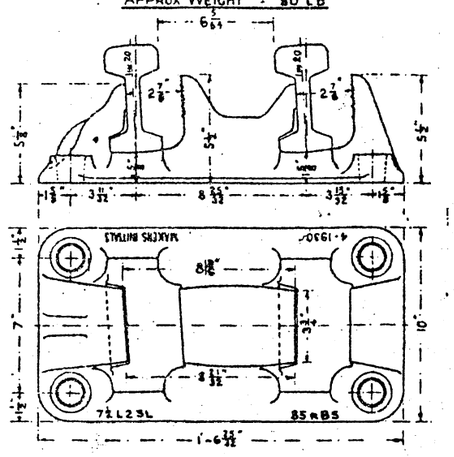

7½ SBR CHAIR
APPROX WEIGHT - 147 LB

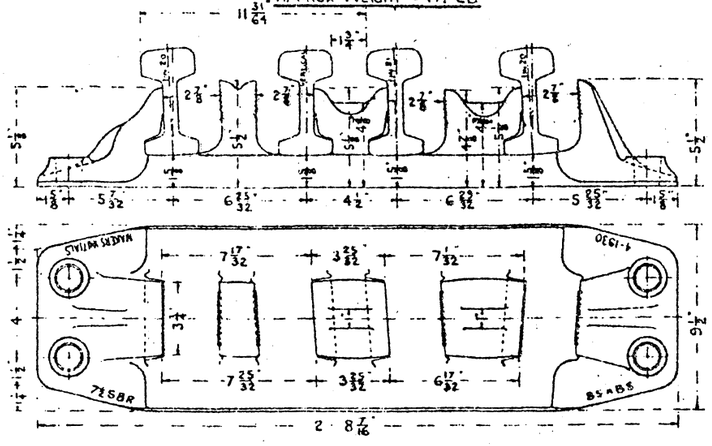

7½ SN CHAIR
APPROX WEIGHT - 134 LB

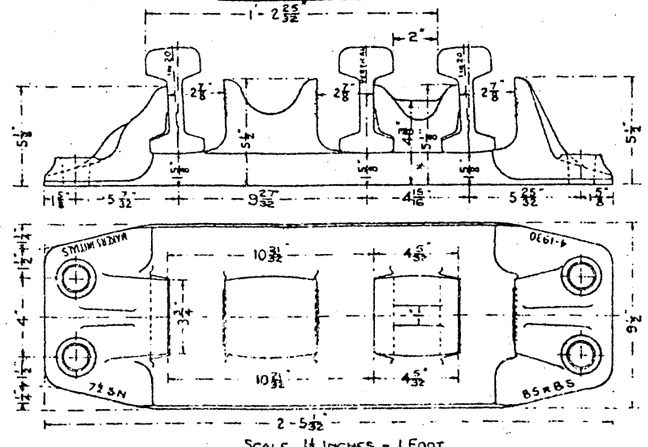

SCALE 1½ INCHES = 1 FOOT

INCHES 12 9 6 3 0 1 FOOT

NOTES

THE RAIL JAW OF ALL SLIP CHAIRS OTHER THAN THE "P" AND "DPA" TO CONFORM TO THE PROFILE OF THE RAIL JAW OF THE S2 CHAIR (SEE DRAWING No 52) SUBJECT HOWEVER TO THE ESSENTIAL DIFFERENCE IN THE HORIZONTAL INCLINATION NECESSITATED BY THE ANGLE OF THE CROSSING.

THE DETAILS OF THE KEY JAW ARE SHEWN ON DRAWINGS No 65 AND 85 AND THESE DRAWINGS ARE TYPICAL OF THE KEY JAWS FOR ALL SLIP CHAIRS, SUBJECT TO THE ESSENTIAL DIFFERENCE IN THE HORIZONTAL INCLINATION NECESSITATED BY THE ANGLE OF THE CROSSING, AND SUBJECT ALSO TO THE HEIGHT BEING 4 7/8" INSTEAD OF 5½" IN THE CASE OF THE POINT RAIL KEY JAW OF THE 7½ S B CHAIR

THE HORIZONTAL DIMENSIONS APPEARING ON THE ELEVATION DRAWINGS ARE THOSE OBTAINING IN THE CENTRE OF THE CHAIR, EXCEPTING IN THE CASE OF THE "A" CHAIR, WHICH LATTER ARE TAKEN NOT AT THE CENTRE OF THE CHAIR, BUT AT THE POINT OF THE CROSSING.

THE DIMENSIONS SHEWN ON THE DRAWINGS FOR THE RIGHT HAND CHAIRS APPLY ALSO TO THE CORRESPONDING LEFT HAND CHAIRS.

SWITCH AND STOCK RAILS ARE TO BE CANTED TOWARDS THE RUNNING SIDE AT AN INCLINATION OF 1 in 20 FROM THE VERTICAL.

THE HOLES IN THE CHAIR BASES TO TAKE THE STANDARD FERRULE AND SCREW.

THE LETTERS (UN) AND (ST) TO BE CAST ON THE 7½ DPA CHAIR TO INDICATE FOR WHICH TYPE OF SWITCH, UNDERCUT OR STRAIGHTCUT, IT HAS BEEN DESIGNED.

THE DATE OF MANUFACTURE, MAKERS INITIALS AND WEIGHT OF RAIL DESIGNED FOR, ARE ALSO TO BE CAST ON EACH CHAIR

FOR DETAIL OF CHAIR SCREWS FOR 7½ S A BUILT UP CHAIR, SEE DRAWING No 90.

STANDARD RAILWAY EQUIPMENT — PERMANENT WAY.

Nº 94.

M. 2. CHAIR. 41 LB.

85 R. B.S. RAIL.

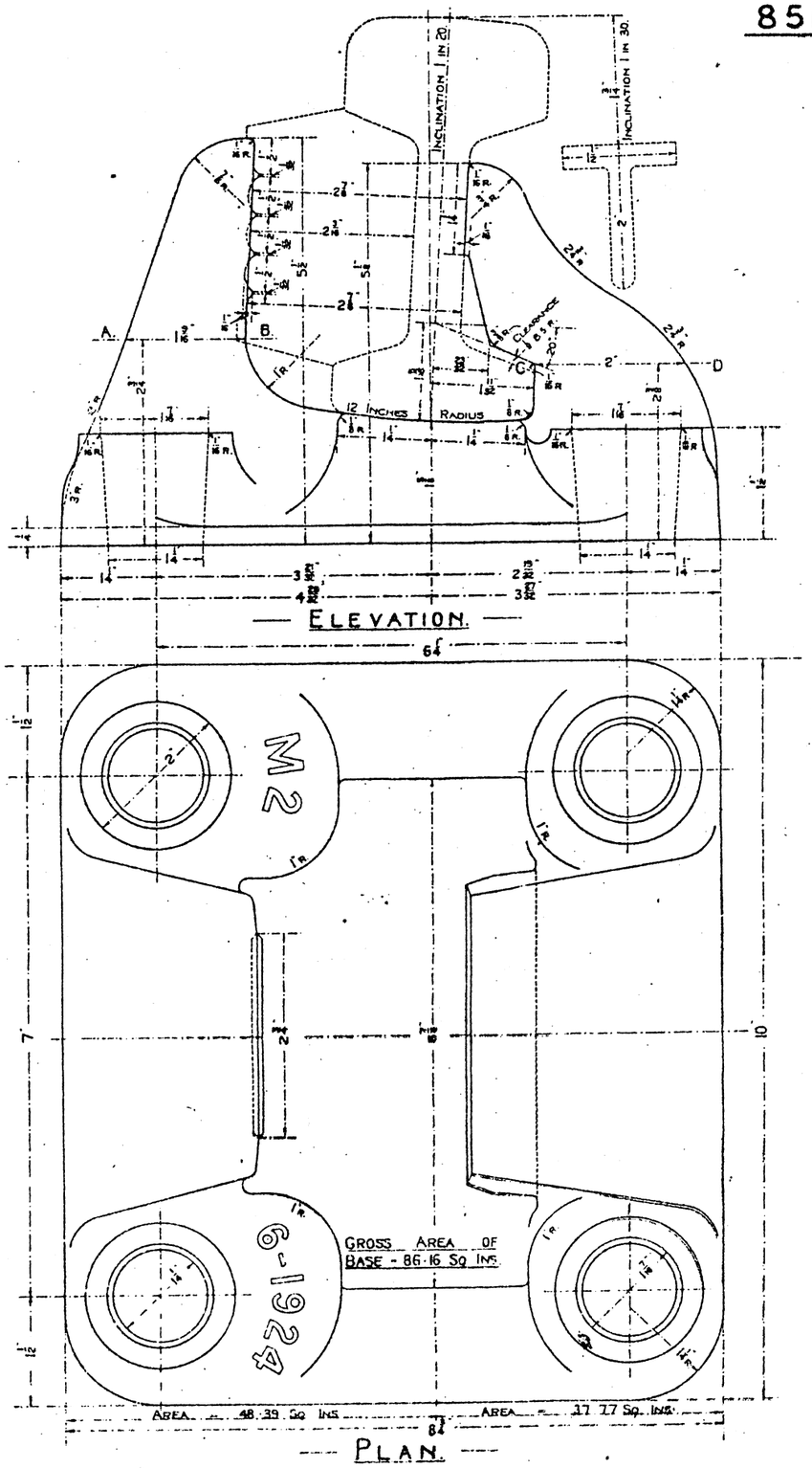

— ELEVATION. —

— PLAN. —

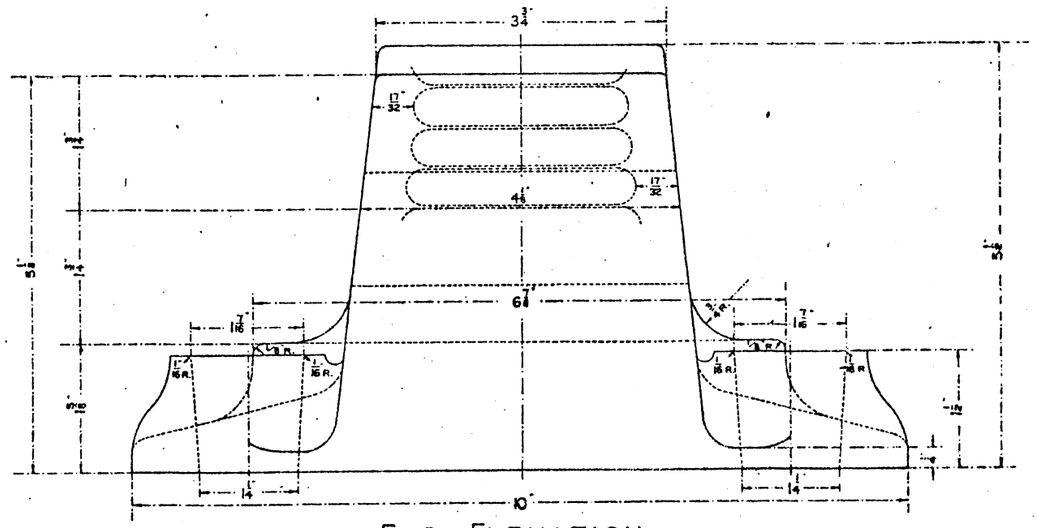

— END ELEVATION. —

THE 90 R. B.S. RAIL CAN ALSO BE USED IN THIS CHAIR.

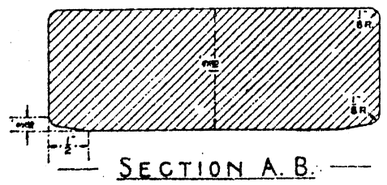

— SECTION A. B. —

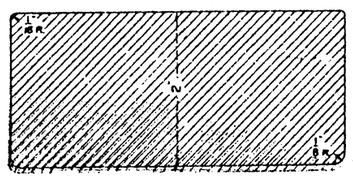

— SECTION C. D. —

— HALF FULL SIZE. —

STANDARD RAILWAY EQUIPMENT — PERMANENT WAY.

N.34

S.2.N & S.2.O CHAIRS.

85R. B.S. RAIL.

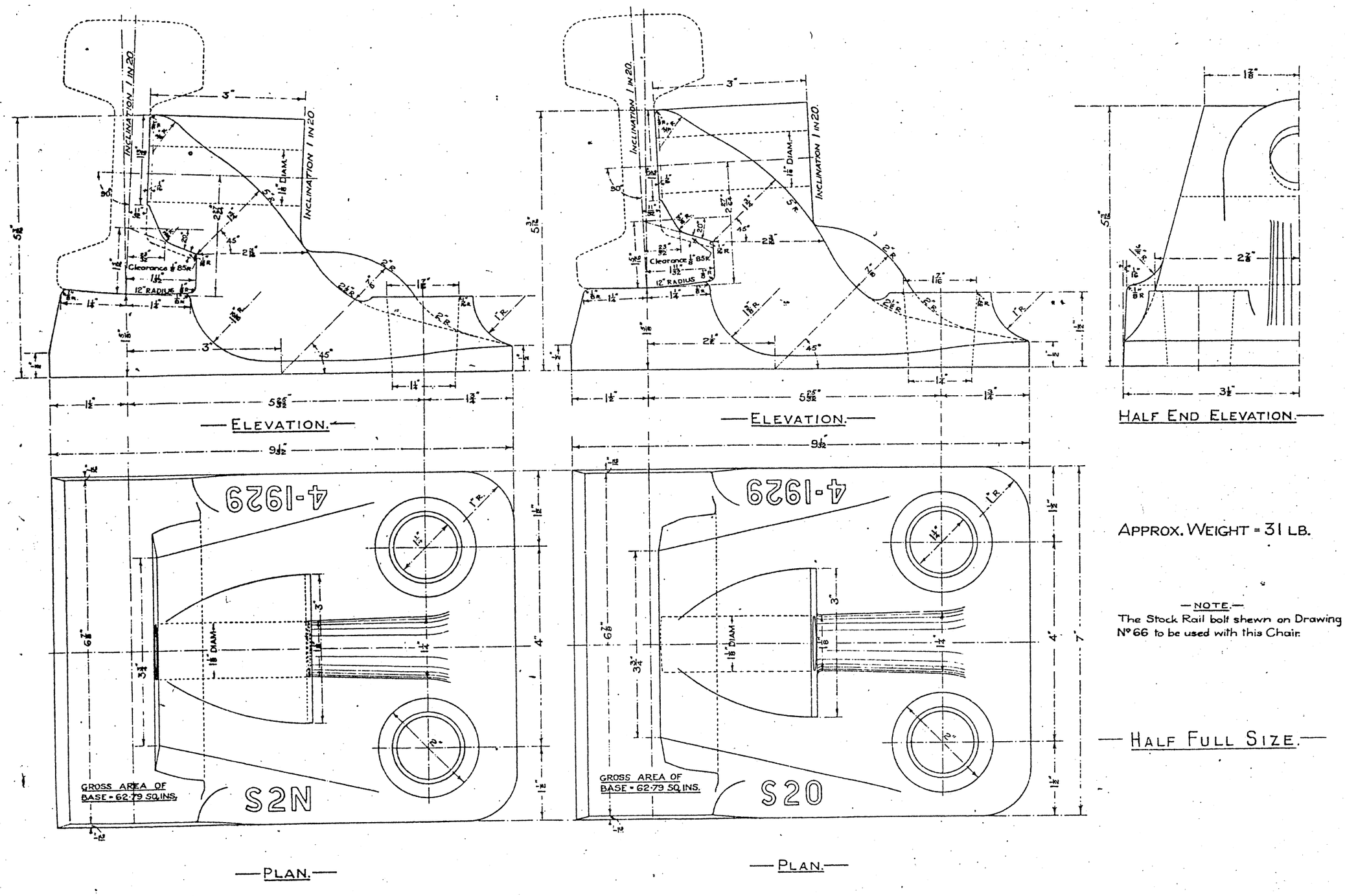

— ELEVATION. — — ELEVATION. — — HALF END ELEVATION. —

— PLAN. — — PLAN. —

APPROX. WEIGHT = 31 LB.

— NOTE. —
The Stock Rail bolt shewn on Drawing Nº 66 to be used with this Chair.

— HALF FULL SIZE. —